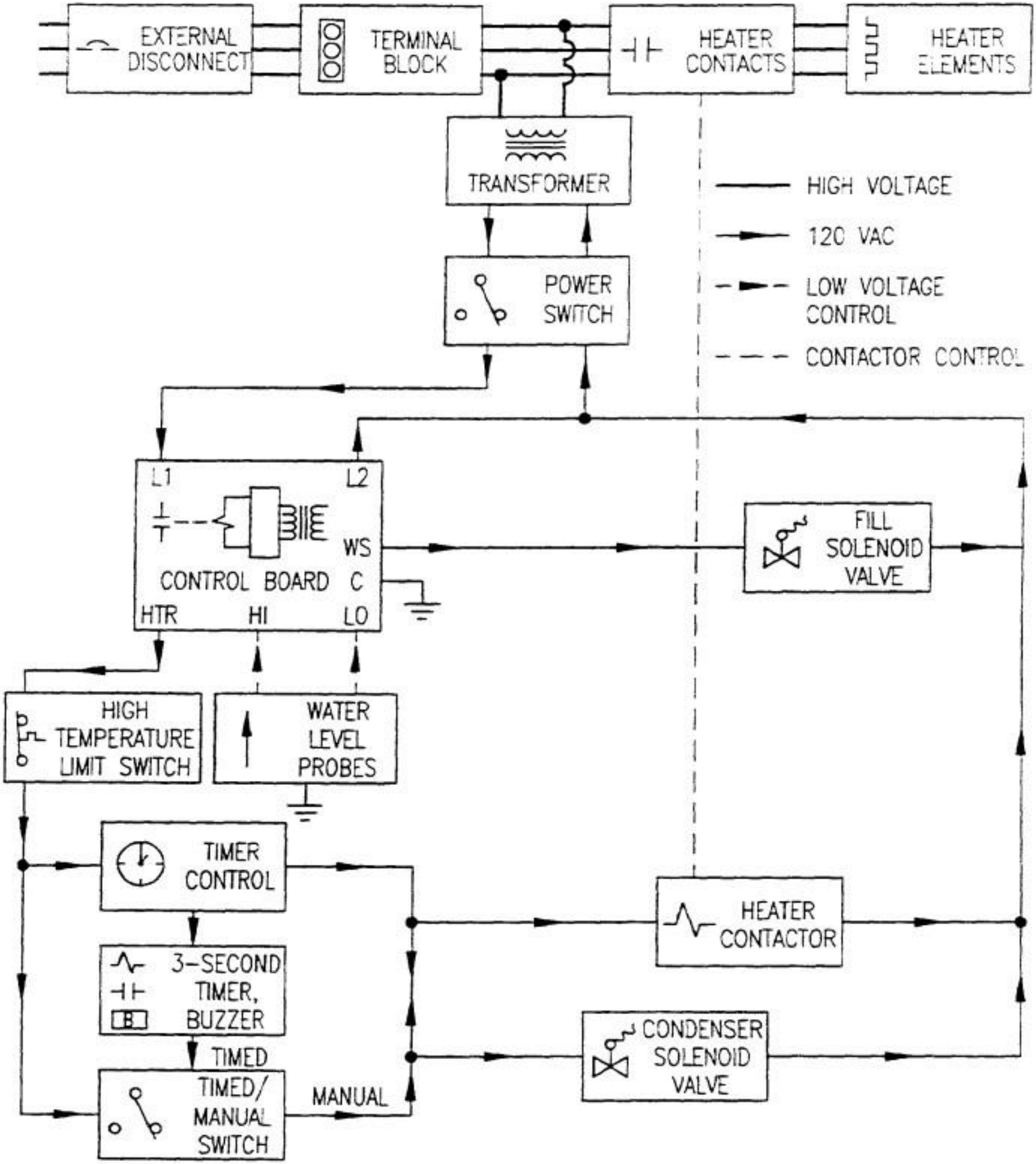
EXTERNAL DISCONNECT
TERMINAL BLOCK
HEATER CONTACTS
HEATER ELEMENTS
TRANSFORMER
HIGH VOLTAGE
120 VAC
LOW VOLTAGE CONTROL
CONTACTOR CONTROL
POWER SWITCH
L1
L2
WS
C
CONTROL BOARD
HTR
HI
LO
FILL SOLENOID VALVE
HIGH TEMPERATURE LIMIT SWITCH
WATER LEVEL PROBES
TIMER CONTROL
HEATER CONTACTOR
3-SECOND TIMER, BUZZER
TIMED
TIMED/ MANUAL SWITCH
MANUAL
CONDENSER SOLENOID VALVE

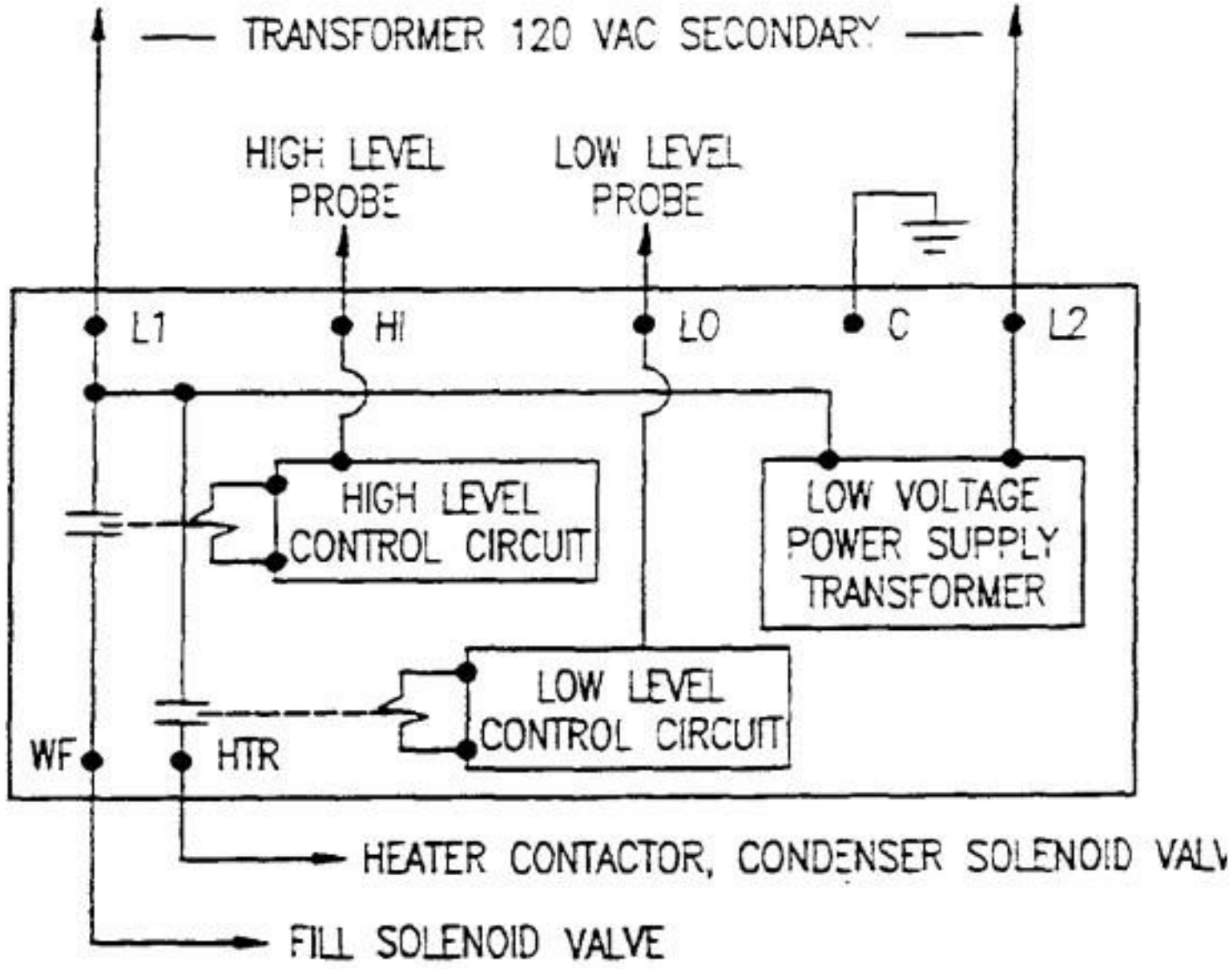
TRANSFORMER 120 VAC SECONDARY
HIGH LEVEL PROBE
LOW LEVEL PROBE
L1
HI
LO
C
L2
HIGH LEVEL CONTROL CIRCUIT
LOW VOLTAGE POWER SUPPLY TRANSFORMER
LOW LEVEL CONTROL CIRCUIT
WF
HTR
HEATER CONTACTOR, CONDENSER SOLENOID VALV
FILL SOLENOID VALVE

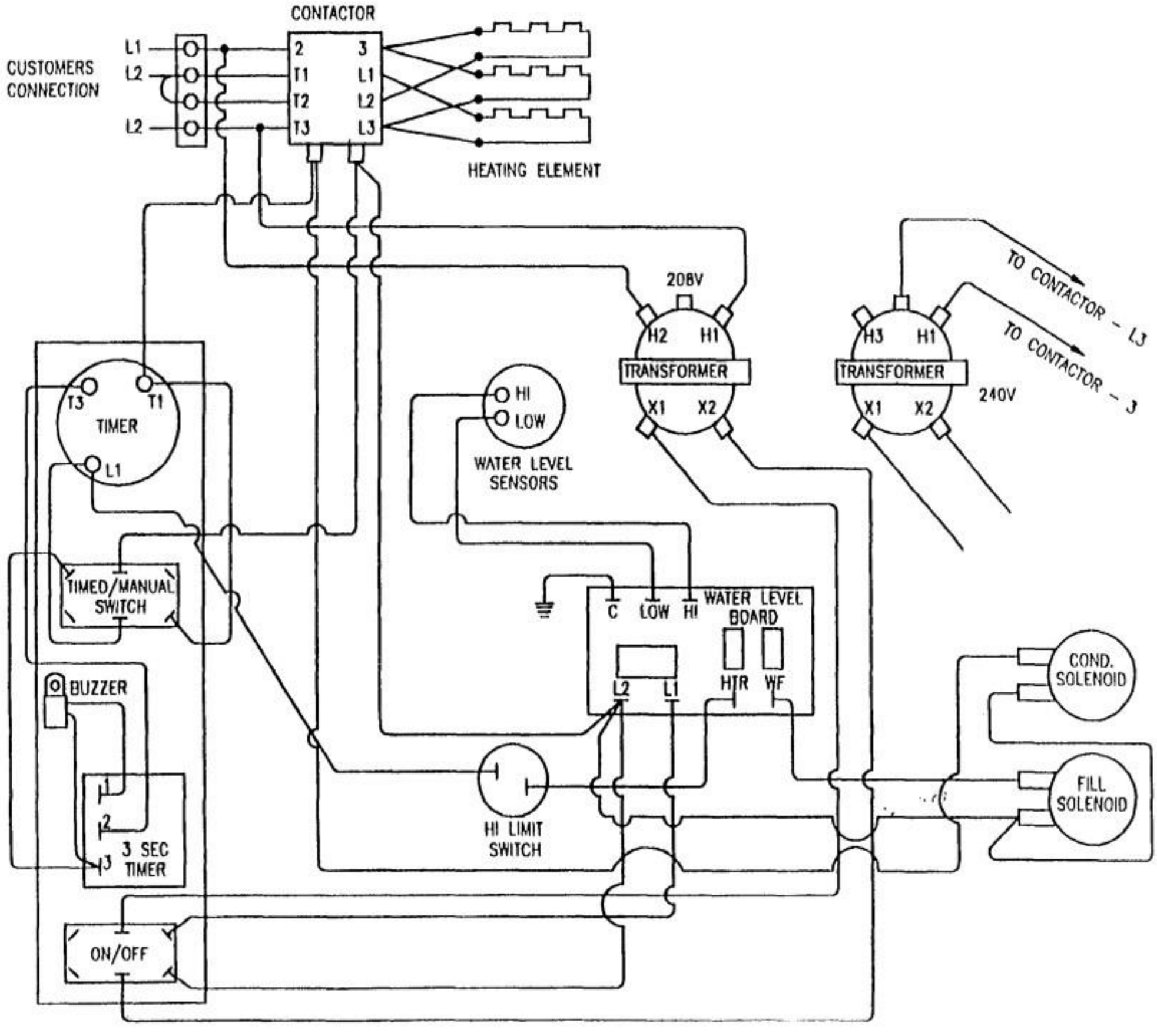
CONTACTOR
CUSTOMERS CONNECTION
L1
L2
L2
2
T1
T2
T3
3
L1
L2
L3
HEATING ELEMENT
208V
H2
H1
TRANSFORMER
X1
X2
H3
H1
TRANSFORMER
X1
X2
240V
TO CONTACTOR - L3
TO CONTACTOR - 3
T3
T1
TIMER
L1
HI
LOW
WATER LEVEL SENSORS
TIMED/MANUAL SWITCH
C
LOW
HI
WATER LEVEL BOARD
L2
L1
HTR
WF
BUZZER
COND. SOLENOID
FILL SOLENOID
1
2
3
3 SEC TIMER
HI LIMIT SWITCH
ON/OFF

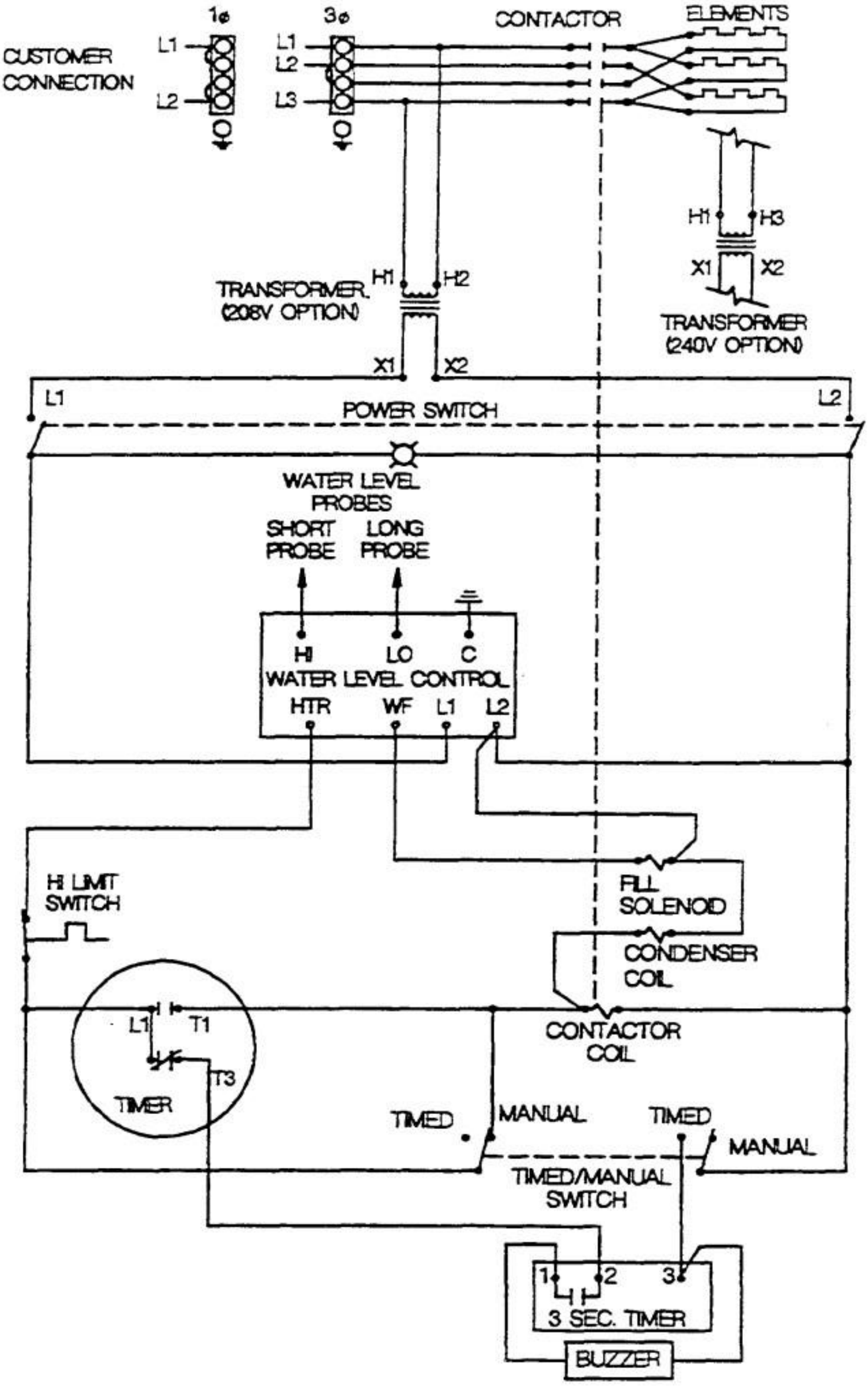
1φ
3φ
CONTACTOR
ELEMENTS
CUSTOMER CONNECTION
L1
L2
L1
L2
L3
H1
H3
X1
X2
TRANSFORMER (208V OPTION)
H1
H2
X1
X2
TRANSFORMER (240V OPTION)
L1
POWER SWITCH
L2
WATER LEVEL PROBES
SHORT PROBE
LONG PROBE
HI
LO
C
WATER LEVEL CONTROL
HTR
WF
L1
L2
HI LIMIT SWITCH
FILL SOLENOID
CONDENSER COIL
L1
T1
T3
TIMER
CONTACTOR COIL
TIMED
MANUAL
TIMED
MANUAL
TIMED/MANUAL SWITCH
1
2
3
3 SEC. TIMER
BUZZER