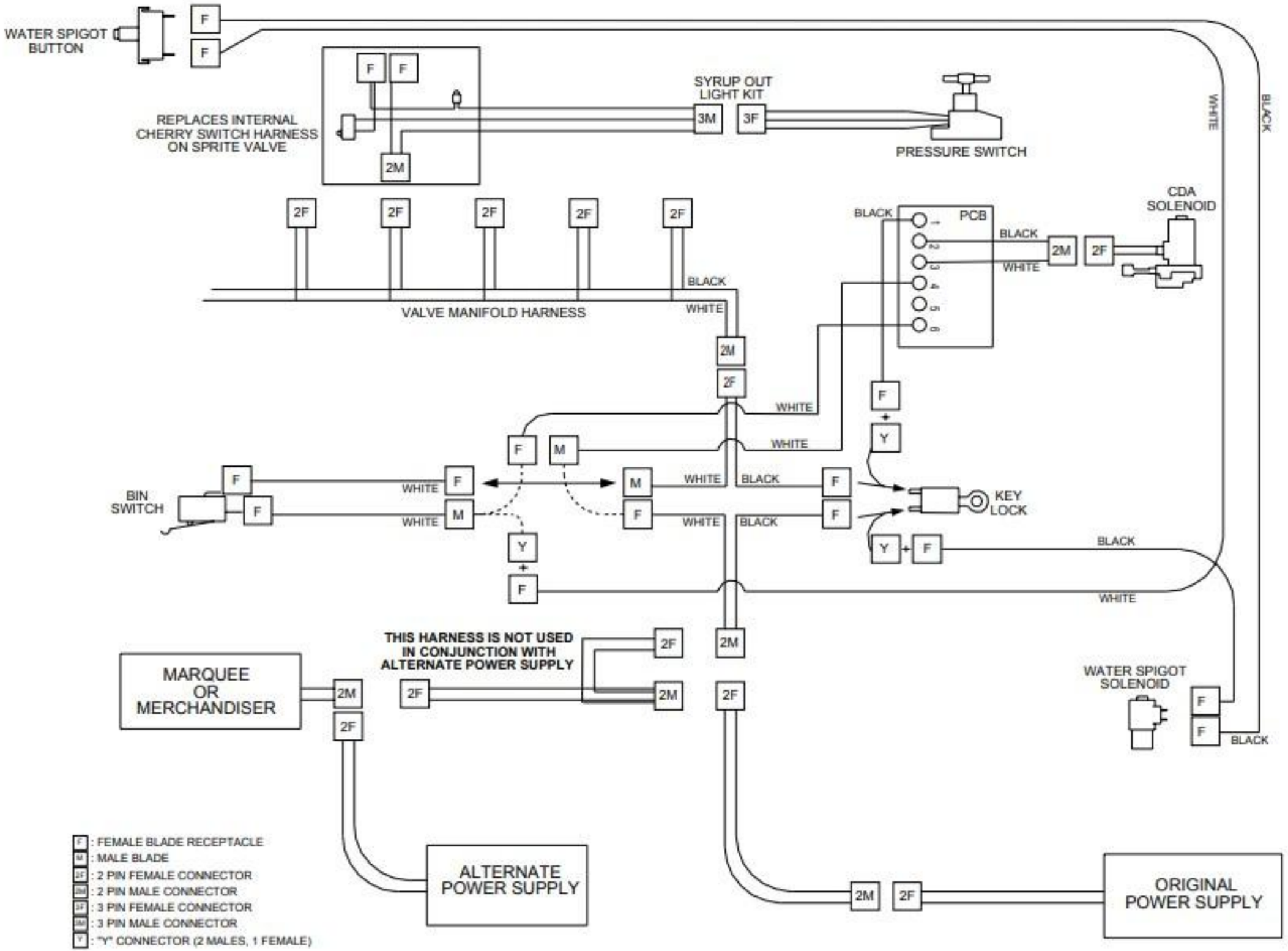
WATER SPIGOT BUTTON
REPLACES INTERNAL CHERRY SWITCH HARNESS ON SPRITE VALVE
SYRUP OUT LIGHT KIT
PRESSURE SWITCH
CDA SOLENOID
PCB
VALVE MANIFOLD HARNESS
BIN SWITCH
KEY LOCK
WATER SPIGOT SOLENOID
THIS HARNESS IS NOT USED IN CONJUNCTION WITH ALTERNATE POWER SUPPLY
MARQUEE OR MERCHANDISER
ALTERNATE POWER SUPPLY
ORIGINAL POWER SUPPLY
BLACK
WHITE
F : FEMALE BLADE RECEPTACLE
M : MALE BLADE
2F : 2 PIN FEMALE CONNECTOR
2M : 2 PIN MALE CONNECTOR
3F : 3 PIN FEMALE CONNECTOR
3M : 3 PIN MALE CONNECTOR
Y : "Y" CONNECTOR (2 MALES, 1 FEMALE)

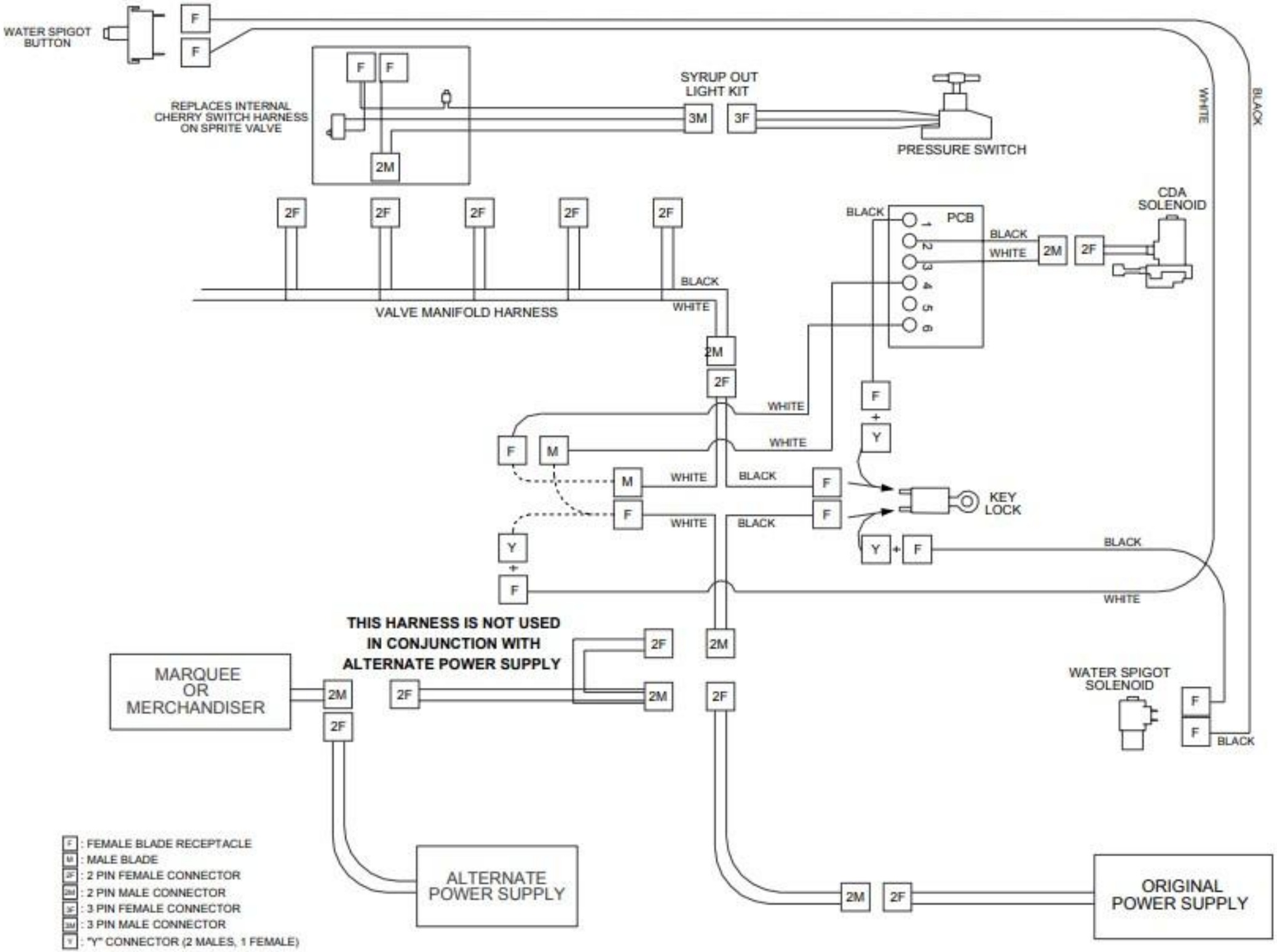
WATER SPIGOT BUTTON
F
F
REPLACES INTERNAL CHERRY SWITCH HARNESS ON SPRITE VALVE
F
F
2M
SYRUP OUT LIGHT KIT
3M
3F
PRESSURE SWITCH
WHITE
BLACK
2F
2F
2F
2F
2F
VALVE MANIFOLD HARNESS
BLACK
WHITE
2M
2F
BLACK
PCB
1
2
3
4
5
6
BLACK
WHITE
2M
2F
CDA SOLENOID
F
+
Y
WHITE
WHITE
F
M
M
WHITE
BLACK
F
F
F
WHITE
BLACK
F
KEY LOCK
Y
+
F
Y
+
F
BLACK
WHITE
THIS HARNESS IS NOT USED IN CONJUNCTION WITH ALTERNATE POWER SUPPLY
2F
2M
MARQUEE OR MERCHANDISER
2M
2F
2F
2M
2F
WATER SPIGOT SOLENOID
F
F
BLACK
ALTERNATE POWER SUPPLY
2M
2F
ORIGINAL POWER SUPPLY
F : FEMALE BLADE RECEPTACLE
M : MALE BLADE
2F : 2 PIN FEMALE CONNECTOR
2M : 2 PIN MALE CONNECTOR
3F : 3 PIN FEMALE CONNECTOR
3M : 3 PIN MALE CONNECTOR
Y : "Y" CONNECTOR (2 MALES, 1 FEMALE)