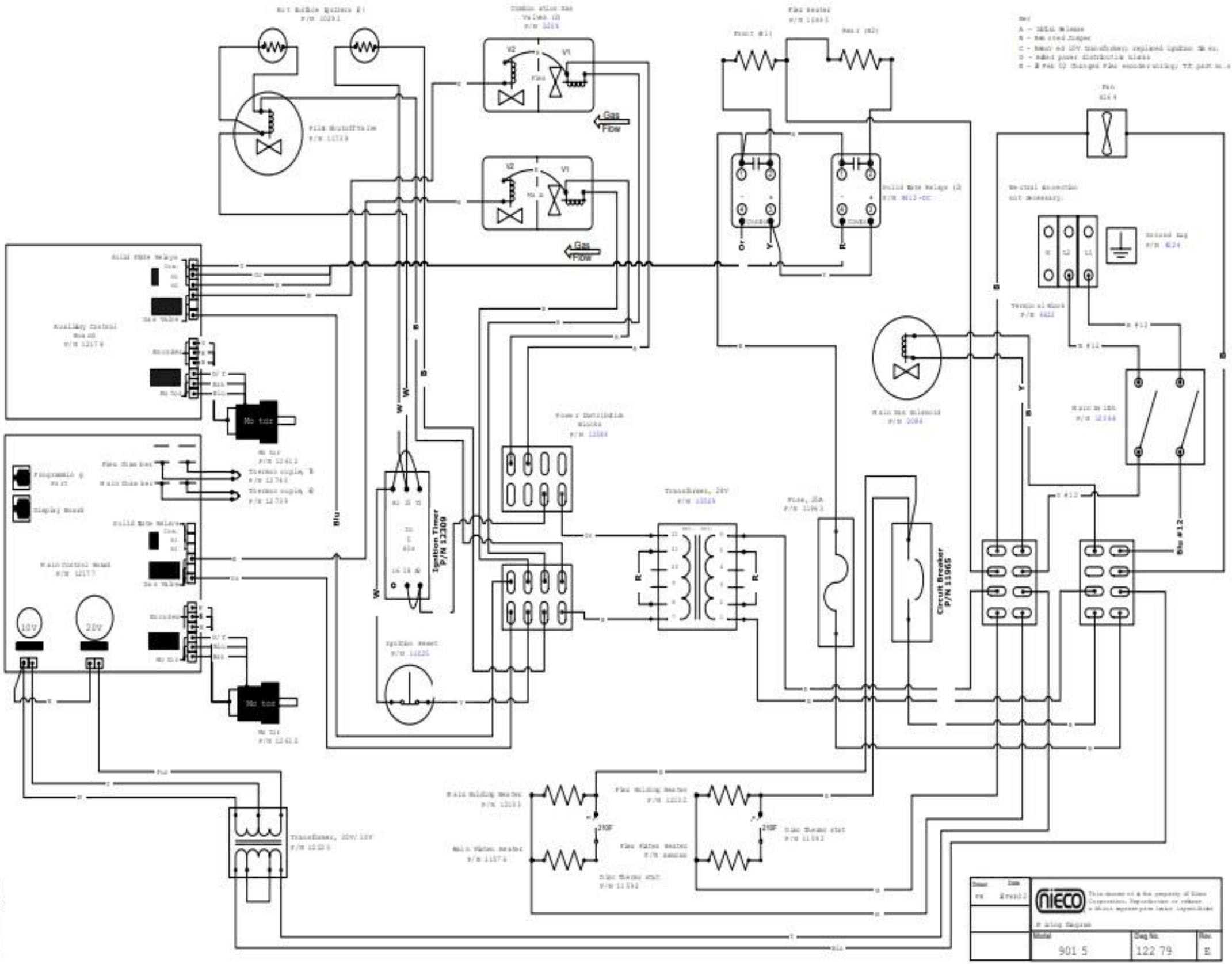
Gas Flow
Gas Flow
Solid State Relays (2)
Solid State Relays (2)
Neutral connection not necessary.
Ignition Timer P/N 12309
Circuit Breaker P/N 11965
Transformer, 20V/12V
Transformer, 24V
Main Water Heater
Flue Water Heater
Main Molding Heater
Flue Molding Heater
210F
210F
Main Gas Solenoid
Main Gas Valve
Flue Gas Valve
Flue Heater
Main Heater
Fuse, 20A
Power Distribution Block
Ignition Reset
Auxiliary Control Board
Main Control Board
Display Board
Motor
Motor
Motor
Motor
10V
20V
Blu
Blu #12
Blu #12
Red
A - Initial Release
B - Revised Jumper
C - Added 10V transformer, replaced Ignition Board
D - Added power distribution block
E - Rev D changed flue encoder wiring, TT part no.
Nieco
This drawing is the property of Nieco Corporation. Reproduction or release without appropriate Nieco approval is prohibited.
Wiring Diagram
Model
901 5
Dwg No.
122 79
Rev.
E