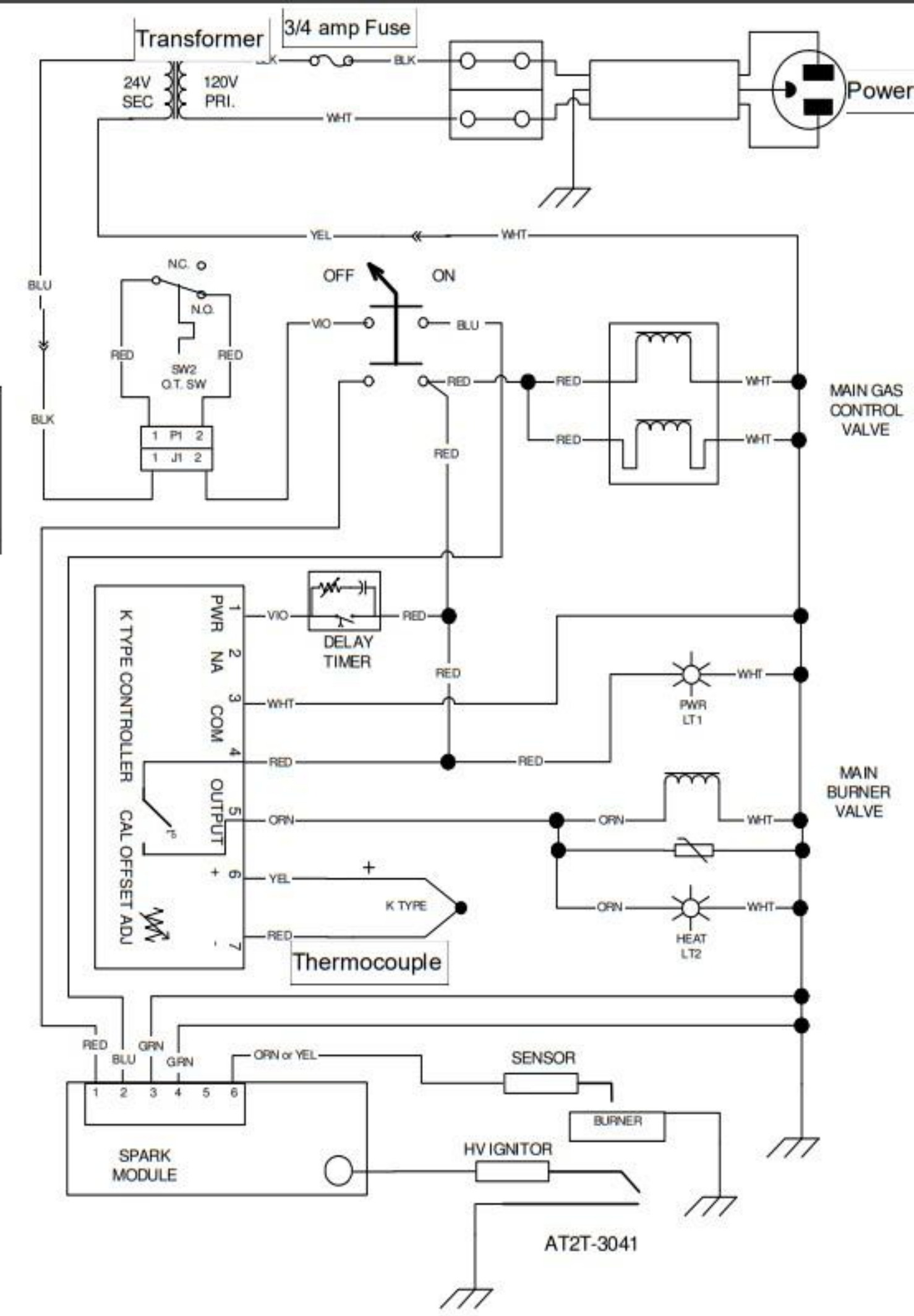
Transformer
3/4 amp Fuse
24V SEC
120V PRI.
BLK
WHT
Power
YEL
WHT
BLU
BLK
N.C.
N.O.
RED
RED
SW2
O.T. SW
1 P1 2
1 J1 2
OFF
ON
VIO
BLU
RED
RED
RED
RED
WHT
RED
WHT
MAIN GAS CONTROL VALVE
K TYPE CONTROLLER
CAL OFFSET ADJ
PWR
NA
COM
OUTPUT
+
-
1
2
3
4
5
6
7
VIO
RED
DELAY TIMER
RED
WHT
RED
RED
WHT
PWR LT1
ORN
ORN
WHT
MAIN BURNER VALVE
YEL
+
K TYPE
RED
ORN
WHT
HEAT LT2
Thermocouple
RED
BLU
GRN
GRN
ORN or YEL
SENSOR
1 2 3 4 5 6
BURNER
SPARK MODULE
HV IGNITOR
AT2T-3041