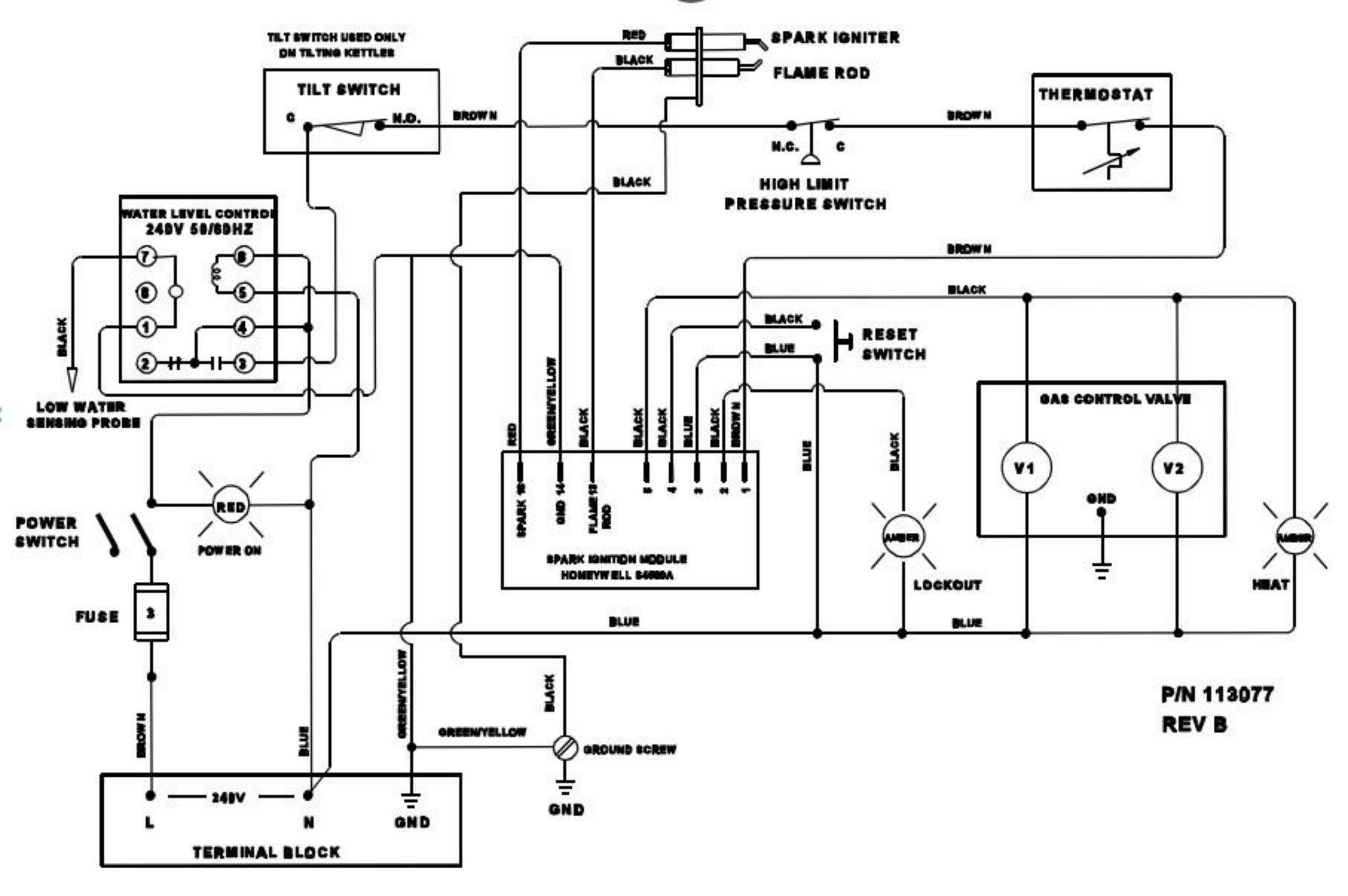
TILT SWITCH USED ONLY ON TILTING KETTLES
TILT SWITCH
C
N.O.
BROWN
RED
BLACK
SPARK IGNITER
FLAME ROD
THERMOSTAT
N.C.
C
HIGH LIMIT PRESSURE SWITCH
WATER LEVEL CONTROL 240V 50/60HZ
LOW WATER SENSING PROBE
RESET SWITCH
BLUE
GAS CONTROL VALVE
V1
V2
GND
SPARK IGNITION MODULE HONEYWELL S4560A
SPARK 16
GND 14
FLAME 13 ROD
GREEN/YELLOW
AMBER
LOCKOUT
HEAT
POWER SWITCH
RED
POWER ON
FUSE
3
GROUND SCREW
GND
240V
L
N
TERMINAL BLOCK
P/N 113077
REV B