AMERICAN RANGE®

A Hatco Company

OWNER'S MANUAL, INSTALLATION, USE AND CARE

MODELS: AF25, AF25/25, AF35/40, AF35/50, AF50/25, AF75, AFDS

BEFORE USING YOUR APPLIANCE, PLEASE READ THIS MANUAL, PAYING SPECIAL ATTENTION TO THE IMPORTANT SAFETY INSTRUCTIONS LOCATED IN THE NEXT SEVERAL PAGES

⚠ WARNING: Improper installation, adjustment, alteration, service or maintenance can cause property damage, injury or death. Read the installation, operating and maintenance instructions thoroughly before installing or servicing this equipment.

FOR YOUR SAFETY
Do not store or use gasoline or other flammable vapors and liquids in the vicinity of this or any other appliance.

IMPORTANT – PLEASE READ AND FOLLOW!

Instructions to be followed in the event the user smells gas must be posted in a prominent location. This information must be obtained by consulting the local gas supplier.

⚠ CAUTION

Check your local building codes for proper installation methods. In the absence of local codes, this appliance must be installed in accordance with the National Fuel Gas Code No. Z223.1 current issue, and the National Electrical Code ANSI/NFPA No. 70 current issue, or the CAN – B149 Installation Codes for Gas Burning Appliances, and C22.1 Canadian Electrical Code Part 1.

Verify the type of gas supplied to the location, being sure that the appliance is connected to the type of gas for which it is certified. Models come from the factory certified for use with Natural Gas *(NG)* or Liquid Propane *(LP)* gas. Your product, shown on the rating label and the supplied gas type must be the same. Upon opening your product, the rating label can be located on the front panel. The rating label location is shown in Figure 2 on page 8 and is also referenced on page 4.

If connecting this appliance to propane gas, make certain the propane gas tank is equipped with its own high-pressure regulator – in addition to the pressure regulator supplied with this product when applicable. The maximum propane gas pressure to this appliance must not exceed 14.0 inches of water column *(34.9 millibar)* from the propane gas tank to the pressure regulator.

RETAIN THIS MANUAL FOR FUTURE REFERENCE

This equipment is design engineered for commercial use only.

DESIGNED & BUILT IN USA
PROFESSIONAL COOKING EQUIPMENT

13592 Desmond St., Pacoima, CA 91331 tel: 818.897.0808 888.753.9898 www.AmericanRange.com

IMPORTANT SAFETY INSTRUCTIONS

⚠ This is the SAFETY ALERT SYMBOL. This symbol alerts you to hazards which will result in severe injury or death.

⚠ DANGER Hazards or unsafe practices which will result in severe personal injury or death.

⚠ WARNING Hazards or unsafe practices which may result in severe personal injury or death.

⚠ CAUTION Hazards or unsafe practices which may result in minor personal injury or property damage.

⚠ DANGER

Gas Standards and Codes

1. A manual gas shut-off valve must be installed in the gas supply (service) line ahead of the appliance and gas pressure regulator in the gas stream for safety and ease of future maintenance/service.
2. The gas pressure regulator supplied with the appliance must be installed prior to connecting the equipment to the gas supply line. Failure to install a regulator will void the equipment warranty and result in a potentially hazardous condition.
3. **Please contact the factory, a factory representative, or local service company to perform maintenance and repairs.**

INSTALLATION, OPERATION AND SERVICE PERSONNEL

Installation of the equipment should be performed by qualified, certified, licensed and/or authorized personnel who are experienced in state/local installation codes. Have the technician show you the exact location of the gas shut-off valve on the incoming gas line so you know how to turn off the gas if necessary.

Operation of the equipment should be performed by qualified or authorized personnel who have read this manual and understand and are familiar with the functions of the equipment.

Service of the equipment should be performed by qualified and licensed personnel who are knowledgeable with American Range products.

IMPORTANT SAFETY INSTRUCTIONS

» Before beginning, please read all the instructions carefully.
» DO NOT remove permanently affixed labels, warnings, or plates from product. This may void the warranty.
» All local and national codes and ordinances must be observed, installation must conform with local codes.
» The Installer must leave these instructions with the consumer who must retain for local inspector's use and for future reference.
» Installation and service must be performed by a qualified installer, service agency or gas supplier.
» Please ensure that the product is properly grounded.
» **In the Commonwealth of Massachusetts, installation must be performed by a licensed plumber or gas fitter.**

Your safety and the safety of others is very important. We have provided many important safety messages in this manual and on your appliance. Always read and obey all safety messages.

IMPORTANT SERVICE NOTICE!

Using any part other than genuine American Range factory supplied parts relieves the manufacturer of all liability. American Range reserves the right to change specifications and product design without notice. Such revisions do not entitle the buyer to corresponding changes, improvements, additions or replacements for the previously purchased equipment.

⚠ WARNING

CA PROPOSITION 65: The burning of gas cooking fuel generates some chemical by-products which may expose you to chemicals including benzine, carbon monoxide, formaldehyde and soot, which are known to the state of California to cause cancer and birth defects or other reproductive harm. To minimize exposure to these substances, always operate this unit according to the Owners Manual, ensuring to provide proper ventilation. For more information go to www.P65warnings.ca.gov

⚠ WARNING

This is a vented appliance. The appliance is not to be installed in conjunction with an air curtain, range hood, or ventilation systems which operates by blowing air downward towards the appliance. This type of ventilation system may cause ignition and combustion problems with the gas cooking appliance resulting in personal injury or unintended operation.

Shipping Damage Claim Procedure

The equipment is crafted and inspected carefully by skilled personnel before leaving the factory. The transportation company assumes full responsibility for the safe delivery upon acceptance of the equipment.

If you receive a damaged product, immediately contact your delivery company, your dealer, your builder or installer. Do not install or attempt to operate a damaged appliance.

1. Note on the freight bill or express delivery any visible loss or damage and have the note signed by the person making the delivery.
2. File claim for damages immediately regardless of the extent of damages.
3. For damage noticed after unpacking (concealed loss or damage), notify the transportation company immediately and file a "Concealed Damage" claim with them. This must be done within five (5) days from the date that delivery is made to you. Retain the shipping container for inspection.

DESIGNED & BUILT IN USA
PROFESSIONAL COOKING EQUIPMENT
A70701 RevE 01082024
AMERICAN RANGE
A Hatco Company
13592 Desmond St Pacoima CA 91331
T. 818.897.0808 Toll Free: 888.753.9898
www.AmericanRange.com

IMPORTANT SAFETY INSTRUCTIONS

⚠ WARNING

IF THE INFORMATION IN THIS MANUAL IS NOT FOLLOWED EXACTLY, A FIRE OR EXPLOSION MAY RESULT CAUSING DAMAGE, PERSONAL INJURY OR DEATH.

INSTALLATION AND SERVICE MUST BE PERFORMED BY A CERTIFIED / LICENSED INSTALLER, SERVICE AGENCY OR THE GAS SUPPLIER

- Do not store or use gasoline or other flammable vapors or liquids in the vicinity of this or any other appliance.
- Please observe all local and national codes and ordinances.
- Do not remove any permanent warning labels or plates from this product.
- Please ensure that this product is electrically grounded.
- Consumers must retain these instructions for local inspectors and for future use.

WHAT TO DO IF YOU SMELL GAS

- **Do not try to light any appliance**
- **Do not touch any electrical switch**
- **Do not use any phone in your building**
- **Using a neighbor's phone, immediately call your gas company**
- **Follow the gas supplier instructions**
- **If you can not reach your gas supplier, call the Fire Department**

INSTALLATION

VENTILATION HOODS

Means must be provided for any commercial, heavy-duty cooking appliance to exhaust combustion waste products to the outside of the building. Usual practice is to place the unit under an exhaust hood. Filters and drip troughs should be part of any industrial hood. Consult local codes before constructing and installing a hood.

Room air movement should be monitored during installation. Strong exhaust fans in the hood or in the overall air conditioning system can produce a slight vacuum in the room and/or cause air drafts – either may interfere with the pilot or main burner performance and can also be hard to diagnose. If pilot burner or main burner outage problems persist – make up air openings or baffles may have to be provided in the room.

Provisions shall be incorporated in the design of the kitchen to ensure adequate supply of fresh air and adequate clearance for air openings into the combustion chamber, for proper combustion and ventilation. For proper operation of the appliance, **do not obstruct the flow of combustion and ventilation air.**

INSTALLATION – GAS STANDARDS AND CODES

IMPORTANT – The installation of this appliance must conform to local codes or, in the absence of local codes, with the National Fuel Gas Code ANSI Z223.1/NFPA 54 Natural Gas Installation Code, CAN/CGA-B149-1 or the Propane Installation Code, CAN/CGA-B149-2 as applicable, including:

1. The appliance and its individual shut-off valve must be disconnected from the gas supply piping system during any pressure testing of that system at test pressure in excess of 1/2 psi (3.45 kPa).
2. The appliance must be isolated from the gas supply piping system by closing the individual manual shut-off valve during any pressure testing of the gas supply piping system at test pressure, equal to or less than 1/2 psi (3.45 kPa).

The appliance, when installed, must be wired and electrically grounded in accordance with local codes, or in the absence of local codes, with the National Electric Code, ANSI/NFPA 70, or the Canadian Electrical Code, CSA C22.2 as applicable.

WARNING

If the information in this manual is not followed exactly, a fire or explosion may result causing damage, personal injury or death.

- INSTALLATION AND SERVICE MUST BE PERFORMED BY A CERTIFIED / LICENSED INSTALLER, SERVICE AGENCY OR THE GAS SUPPLIER
- Do not store or use gasoline or other flammable vapors or liquids in the vicinity of this or any other appliance.

- WHAT TO DO IF YOU SMELL GAS
  - Do not try to light any appliance.
  - Do not touch any electrical switch, do not use any phone in your building.
  - Immediately call your gas company. Follow the gas supplier instructions.
  - If you cannot reach your gas supplier, call the Fire Department.

WARRANTY REQUIREMENT

For reliable operation and for your own safety, this professional cooking equipment must be installed by a certified/licensed contractor.

Failure to comply will void any written or implied warranty.

Should the equipment require service during the standard warranty period, the receipt proving certified installation must be made available to American Range for verification.

If installation was not performed by a certified/licensed contractor be prepared to submit a major credit card for payment for proper installation.

- Please observe all local and national codes and ordinances.
- Do not remove any permanent warning labels or plates from this product.
- Consumers should retain these instructions for local inspectors and for future use.

ABOUT THIS MANUAL

The Use and Care Manual is divided into several sections:

The Safety Section informs you about significant safety precautions when installing and operating your new fryer. This is a must read section of the manual.

Quick Start and Installation Section describes how to unpack the unit, what to save and what to discard, installation dimensions, gas and electrical connections and how to identify the primary parts of the product so you can better understand what's going on "under the hood".

How to Use Your Product shows you how to light the pilot and set frying temperatures.

The Care and Maintenance and Troubleshooting and Service Sections discuss how to keep your product in good operating condition, how to identify what might be going wrong with the unit, and how to communicate your observations with authorized field service technicians.

Before using your appliance, please read this manual paying special attention to the important safety instructions located in the next several pages.



This is the SAFETY ALERT SYMBOL. This symbol alerts you to hazards which will result in severe injury or death.

DANGER Hazards or unsafe practices which will result in severe personal injury or death.

WARNING Hazards or unsafe practices which may result in severe personal injury or death.

CAUTION Hazards or unsafe practices which may result in minor personal injury or property damage.

CALIFORNIA PROPOSITION 65 WARNING

The burning of gas cooking fuel generates some by-products which are on the list of substances known by the State of California to cause cancer or reproductive harm. California law requires businesses to warn customers of potential exposure to such substances. To minimize exposure to these substances, always operate this unit according to the Owners Manual, ensuring you provide proper ventilation when cooking with gas.

DESIGNED & BUILT IN USA PROFESSIONAL COOKING EQUIPMENT
A70701 RevE 01082024

AMERICAN RANGE A Hatco Company
13592 Desmond St Pacoima CA 91331
T. 818.897.0808 Toll Free: 888.753.9898
www.AmericanRange.com

IMPORTANT - PLEASE READ AND FOLLOW!

- Before beginning, please read all the instructions carefully.
- DO NOT remove permanently affixed labels, warnings, or plates from product. This will void the warranty.
- All local and national codes and ordinances must be observed; installation must conform with local codes.
- The Installer must leave these instructions with the consumer who should retain for local inspector's use and for future reference.
- Installation and service must be performed by a certified / licensed installer, service agency or gas supplier.

Your safety and the safety of others is very important. We have provided many important safety messages in this manual and on your appliance. Always read and obey all safety messages.

SHIPPING DAMAGE CLAIM PROCEDURE

The equipment is crafted and inspected carefully by skilled personnel before leaving the factory. The transportation company assumes full responsibility for the safe delivery upon acceptance of the equipment.

If you receive a damaged product, immediately contact your delivery company, your dealer, your builder or installer. Do not install or attempt to operate a damaged appliance.

1. Note any visible loss or damage on the freight bill or express delivery and have the note signed by the person making the delivery.
2. File claim for damages immediately regardless of the extent of damages.
3. For damage noticed after unpacking (concealed loss or damage), notify the transportation company immediately and file a "Concealed Damage" claim with them. This should be done within fifteen (15) days from the date that delivery is made to you. Retain the shipping container for inspection.

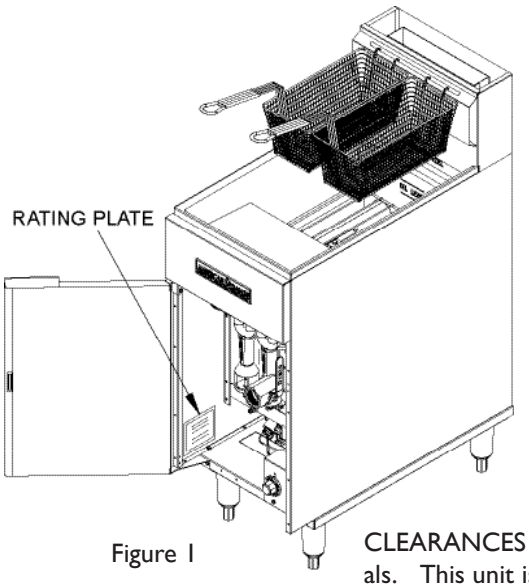

Figure 1

RATING PLATE - The location of the rating plate is shown in Figure 1. The information on the rating plate defines the model, serial number, gas type (natural or liquid propane), operating pressures and burner BTU ratings. Keep this information for future reference. It is essential for proper identification of the unit when requesting additional information or factory support.

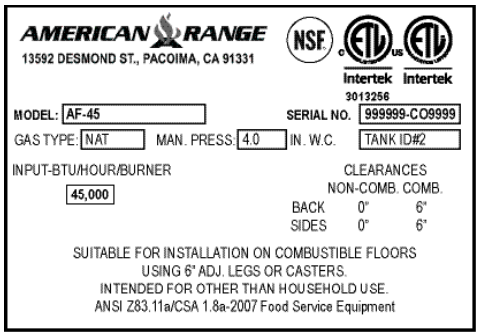

Rating Plate

WARNING Appliances must be connected only to the type of gas identified on the rating plate.

CLEARANCES - The appliance must be kept free and clear of all combustible materials. This unit is designed and certified for the following installation only:

CLEARANCES		
	NON-COMBUSTIBLE	COMBUSTIBLE
Sides	0"	6"
Rear	0"	6"
Floor	0"	6"

Installation on non-combustible floor shall be with factory supplied legs or casters.

INSTALLATION

INSTALLATION - GAS UTILITY CONNECTIONS-STANDARDS AND CODES

WARNING The installation instructions contained here are for the use of qualified installation and service personnel only. Installation or service by other than certified / licensed personnel will void the warranty and will result in damage to the fryer and/or injury to the operator.

Qualified installation personnel, licensed and bonded, must be experienced in such work, familiar with all precautions required and have complied with all requirements of state or local authorities having jurisdiction.

WARNING This equipment must be installed in accordance with the appropriate national and local codes of the country and/or region.

The ventilation of these fryers should be in accordance with local codes. In absence of local codes, refer to the national ventilation code titled, Standard for the Installation of Equipment for the Removal of Smoke and Grease Laden Vapors from Commercial Cooking Equipment, NFPA-96-Latest Edition.

The appliance is to be installed with a check valve in accordance with applicable federal, province and local codes.

GENERAL EXPORT INSTALLATIONS - Installation must conform to Local and National Standards. Local installation codes
and/or requirements may vary. If you have any questions regarding the proper installation or operation of your American Range Fryer, please contact your local distributor. If you do not have a local distributor, contact American Range Corporation at 1.888.753.9898 or visit us at www.americanrange.com

INSTRUCTIONS

The area around the appliance must be keep free and clear of combustibles such as solvents, cleaning liquid, broom, rags, etc.

All threaded joints of the appliance piping must be sealed with a compound that is resistant to the action of natural gas or liquefied petroleum gases and the joint connection checked for gas leaks using a soapy water solution before lighting the pilots.

Proper clearances must be provided at the front of the appliance for servicing and proper operation.

For proper combustion and ventilation provisions shall be incorporated in the design of the kitchen, to ensure adequate supply of fresh air and adequate clearance for air openings into the combustion chamber.

For proper operation of the appliance, do not obstruct the flow of combustion and ventilation air.

A manual gas shut-off valve shall be installed when the appliance is connected to the gas supply.
The rating plate is located inside of the left side panel.
The connecting wiring diagram is located on the lower inside of the left side panel.

The installation must conform with local codes, or in the absence of local codes, with the National Fuel Gas Code, ANSI Z223.1NFPA54, or the Natural and Propane Gas Installation Code, CSA B149.1, as applicable, including:

1. The appliance and its individual shut-off valve must be disconnected from the gas supply piping system during any pressure testing of that system at test pressure in excess of 1/2 PSI (3.5KPa).
2. The appliance must be isolated from the gas supply piping system by closing its individually manual shut-off valve during any pressure testing of the gas supply piping system at test pressure equal to or less then 1/2 PSI (3.5KPa).

The gas supply line must be at least 3/4" ID (inside dimensions) size as the gas inlet of the appliance.

FRYERS WITH CASTERS - When this appliance is installed with casters it must be installed with a connector that complies with the standard for connectors for movable gas appliances, ANSI Z21.69 CSA.16. and a quick-disconnect device that complies with the standard for quick-disconnect devices for use with gas fuel, ANSI Z21.41 CSA6.9. Adequate means must be provided to limit the movement of the appliance without depending on the connector and the quick-disconnect device or its associated piping to limit the appliance movement. The restraining device may be attached to the rear panel of the appliance.

⚠ WARNING

When installing the pressure regulator - remember it can only handle 1/2 PSI. In every LPG installation, you have high source pressures, ranging from 20 PSI to 100 PSI. If the high pressure gas line from the LPG tank is directly connected to the unit without the proper step-down regulator, it will rupture the diaphragm in the valve, rendering it useless.

MODEL AND PARTS IDENTIFICATION

	AF SERIES FRYERS							
DESCRIPTION	AF25	AF25/25	AF35/40	AF35/50	AF35/50RM	AF25/50	AF75	AFDS
Basket Hanger	1	2	1	1	1	2	1	0
Baskets	1	2	2	2	2	3	2	0
Rack/Screen	1	2	1	1	1	2	1	1
Burners	2	4	2	3	3	5	4	
Drain Extension Pipe	1	2	1	1	1	2	1	0
Legs	2	4	4	4	4	4	4	4
Regis. Card	1	1	1	1	1	1	1	1
U&C Manual	1	1	1	1	1	1	1	1

13592 Desmond St Pacoima CA 91331
T. 818.897.0808 Toll Free: 888.753.9898
www.AmericanRange.com

INSTALLATION CHECKLIST

REGISTRATION CARD
TO VALIDATE YOUR WARRANTY,
YOU MUST MAIL, EMAIL OR REGISTER ONLINE
WITH A COPY OF YOUR RECEIPT TO:

AMERICAN RANGE CUSTOMER SERVICE,
13592 DESMOND STREET, PACOIMA, CA 91331
EMAIL: service@americanrange.com

REGISTER ONLINE AT
https://www.americanrange.com/warranty-registration/

This checklist has been developed to assure proper installation of your appliance.

Model Number: _____ *
Serial Number: _____ *
Gas Type: _____ *
Electrical Information: _____ *
Purchase Date: _____
Dealer: _____

Installation Date: _____
Installation Company: _____
Installation Rep's Name: _____
Installer's Address: _____
Installer's Phone: _____

** As specified on appliance Rating Plate – see page 4 for reference.*

CHECK ALL THAT APPLY

Appearance and Aesthetics
☐ Exterior
☐ Top section
☐ Oven interior

Installation
☐ Read User Manual
☐ Review Safety Instructions
☐ Proximity to cabinets
☐ Backguard in place
☐ Level
☐ Ventilation system

Ignition
☐ Top Burners
☐ Griddle
☐ Char Broiler
☐ Oven Burner
☐ Infrared Broiler

Controls
☐ Burner Knobs
☐ Thermostats
☐ Char Broiler
☐ Convection Oven Fan and Switch
☐ Oven Light Switch

Electrical Connection
☐ Correct voltage
☐ Grounded outlet
☐ Polarized outlet
☐ No GFCI

Gas Connection
☐ Verify fuel: ☐ Natural –or– ☐ LP
☐ Gas shut-off present and accessible
☐ Gas Supply line properly sized
☐ Gas Supply pressure checked
☐ Operating pressure checked
☐ All connections checked for leaks

Flame Adjustment
☐ Top Burners
☐ Griddle
☐ Char Broiler
☐ Oven Burner
☐ Infrared Broiler

Air/Gas Mixture
☐ Top Burners
☐ Griddle
☐ Char Broiler
☐ Oven Burner
☐ Infrared Broiler

Valve Operation
☐ Top Burners
☐ Griddle
☐ Char Broiler
☐ Oven Burner
☐ Infrared Broiler

Oven Door
☐ Alignment
☐ Door Seal
☐ Hinges

Customer Copy

DESIGNED & BUILT IN USA
PROFESSIONAL COOKING EQUIPMENT
A70701 RevE 01082024

AMERICAN RANGE
A Hatco Company

13592 Desmond St Pacoima CA 91331
T. 818.897.0808 Toll Free: 888.753.9898
www.AmericanRange.com

OPERATING INSTRUCTIONS

⚠ WARNING The installation instructions contained here are for the use of qualified installation and service personnel only. Installation or service by other than certified / licensed personnel will void the warranty and will result in damage to the oven and/or injury to the operator.

BEFORE TURNING THE BURNER ON

1. Fill the vessel with a liquid oil up to the "Level" marking.
2. Do not operate fryer without oil in the vessel.
3. Do not overfill the vessel.

PILOT LIGHTING PROCEDURE

INITIAL PILOT LIGHTING: All American Range fryers are tested, adjusted and calibrated to sea level conditions before leaving the factory. Adjustments of the pilot may be necessary to meet local supply conditions such as low gas pressure, differences in altitude and variations in gas composition. These adjustments correct possible problems caused by rough handling or vibration during shipment, and shall be performed only by qualified service personnel. These adjustments are the responsibility of the customer and/or the dealer and are not covered by the American Range warranty.

The inlet pipe at the lower rear of the fryer brings incoming gas to the pilot safety control valve, then to the pilot and main burners. The pilot is located in front of the unit about mid-way in the center of the fryer tank.

⚠ WARNING When checking burner ignition or performance, do not get too close to the burners. Slow ignition can cause flashback, increasing the potential for burns.

LIGHTING

1. Before attempting to light this appliance, the door if so equipped, shall be open.
2. Turn the appliance manual gas shut-off valve to the OFF position.
3. Turn the combination gas control knob to the OFF position.
4. Turn the thermostat control to the OFF position.
5. Wait 5 minutes.
6. Turn the appliance manual gas shut-off valve to the ON position.
7. Turn the combination gas control knob to the PILOT position.
8. Light the pilot with a match while depressing and holding the combination gas control knob until the pilot remains lit upon releasing the gas control knob.
9. Turn the combination gas control knob to the ON position.
10. Turn the thermostat control knob to the desired temperature to turn burners ON.
11. Ensure that the door is closed during operation.
12. For complete shut-down, repeat steps 2, 3, and 4.

LIGHTING INSTRUCTION is located on the lower inside of the left side panel.

⚠ DANGER If the pilot and main burner go out, the fryer(s) MUST be left completely shut down at least 5 minutes before lighting.

DESIGNED & BUILT IN USA PROFESSIONAL COOKING EQUIPMENT
A70701 RevE 01082024
AMERICAN RANGE A Hatco Company
13592 Desmond St Pacoima CA 91331
T. 818.897.0808 Toll Free: 888.753.9898
www.AmericanRange.com

OPERATING INSTRUCTIONS (CONTINUED)

DANGER NEVER set a complete block of solid shortening on top of heating tubes. To do so will damage the heating tubes and fryer tank, and void the warranty.

1. When using liquid shortening, fill the fryer to the bottom OIL LEVEL line embossed at the back of the fryer tank.
2. Melt the shortening in a suitable container, or cut it into small pieces and pack it below the heat tubes, between the tubes and on top of the tubes, leaving no air spaces around the tubes. Do not disturb or bend the temperature or hi-limit wires or bulbs.
3. Turn the burners "ON" for about 10 seconds, "OFF" for 1 minute, etc., until the shortening is melted. If smoke occurs, shorten the "ON" time and lengthen the "OFF" time to keep from scorching the shortening and reducing its useful life. Before starting operation, turn the operating thermostat to the probable working temperature. Wait for the oil temperature to stabilize then check with a high-quality immersion thermometer.

FRYING WITH SHORTENING

The type of fat that you use in frying influences many qualities of the finished product such as flavor, texture, shelf life and nutritional attributes. How often you use the fryer – and the temperature that you cook at - will determine how long the fryer oil can be used – most can last up to 100 hours.

Depending on the menu and local eating patterns, fryers will usually be operated at full capacity for a few hours a day, intermittently for a few hours and be idle the reminder of the time. Operating a fryer on an intermittent basis is the primary reason that frying oil must be discarded and replaced periodically. During the idle and low production periods, the oil is subjected to thermal and oxidative stress more than it is during the active frying process. If fryers were operated without interruption and oil was filtered regularly, frying oil would rarely need to be discarded.

Oil and shortening are two types of fat that are typically used in commercial deep fryers. Shortening comes in tubs or bricks and quickly melts down to a liquid for frying purposes – however, it is not used as much now, because it is high in calories and fat. Healthier fry oils like vegetable, canola, and the like are more commonly used in restaurants.

When deep fat frying, remember to never operate the fryer with the tank empty. The burners used in fryers are very powerful mainly to quickly heat the oil and to help recover heat during the cooking process. This power can damage a fryer tank, because the metal of the tank – which is usually cooled by the oil – expands and this expansion could stress and fracture the welds.

So, the tank must be filled with water or cooking oil/shortening before lighting the burners. The bottom line is that failure to do so will damage the tank and may even cause a fire.

To deep fry with shortening, always start with an empty and/or cleaned-out tank and melt the shortening on the stove - carefully pouring it into the tank. That way, you can be sure the shortening is in full contact with the fryer tank metal – eliminating the potential of weld fracture from dry firing.

DANGER Never leave the fryer unattended during the boil-out process. If the boil-out solution boils over, turn the fryer off immediately and let the solution cool for a few minutes before resuming the process.

WARNING Do not drain boil-out solution into a shortening disposal unit, a built-in filtration unit, or a portable filter unit. These units are not intended for this purpose, and will be damaged by the solution.

DANGER Remove all remaining water from the fryer tank before filling with cooking oil or shortening. Failure to do so will cause spattering of hot liquid as the water boils and may cause injury to personnel.

DESIGNED & BUILT IN USA PROFESSIONAL COOKING EQUIPMENT
A70701 RevE 01082024
AMERICAN RANGE A Hatco Company
13592 Desmond St Pacoima CA 91331
T. 818.897.0808 Toll Free: 888.753.9898
www.AmericanRange.com

OPERATING INSTRUCTIONS (CONTINUED 2)

WEEKLY CLEANING

1. Shut down the fryer by turning the thermostat and pilot valve to the OFF position.
2. Disconnect the restraining device before moving the appliance for cleaning and servicing.
3. Drain the fryer into a filtered pan or steel container. Flush out sediment at the bottom of fryer with liquid oil.
4. Close the drain valve and fill the vessel with a mixture of boil-out solution and water.
5. Relight the pilot and turn on the burners.
6. When the solution starts to boil, turn off the thermostat and let the vessel soak to soften deposits and/or carbon spots. Approximately one hour.
7. Drain off the solution, scrub the insides with brush and rinse thoroughly.
8. Repeat steps 4-7 if necessary.
9. Wipe dry with soft towels and refill with oil/shortening.
10. Re-connect the restraining device after returning the appliance to its originally installed position.

⚠ WARNING If the pilot does not stay lit, depress the pilot button and re-light the pilot, holding the button in longer before releasing. Trapped air may necessitate re-lighting the pilot several times until a constant gas flow is attained. When the pilot stays lit, release the white pilot light button.

STAINLESS STEEL PARTS - Do not use steel wool, abrasive cloths, cleaners or powders to clean Stainless Steel surfaces. All Stainless Steel parts should be wiped regularly with hot soapy water during the day and a Stainless Steel cleaner at end of the day. To remove encrusted materials, soak in hot water to loosen the material - then use a wood or nylon scraper.

1. Empty fryer tank and pour in cleaning solution concentrate. Add water to the bottom OIL LEVEL line embossed at the back of the fryer tank.
2. Set the thermostat dial to 100°C (212°F).
3. The main burner will ignite, and shut off, just as the boil-out solution reaches the set temperature.

⚠ WARNING All water must be removed before adding oil or shortening. Not doing so can result in splattering of hot oil causing severe burns and burn hazard.

⚠ WARNING DO NOT DRY-FIRE; operating the unit without liquid is an extreme fire hazard and will cause irreparable damage such as gas leaks, scorched surfaces and burnt components.

⚠ WARNING

1. Do not dry fire the fryer; this will cause a leak. Dry firing is typically done after cleaning when the end user wants to dry out the tank the "easy" way. It is a major cause of tank damage in the industry.
2. Do not drain the oil while it's hot; wait until it cools before emptying. Rapid change in temperature causes stress fractures and tears at the seams.
3. Do not use acidic cleaners; use only boil-out solution. Acid can cause erosion to metal and in due time can cause a leak in the tank.
4. Solid shortening must be liquefied before filling the tank. The tank walls must have liquid against it in order to transfer heat and avoid overheating and stressing the metal to the point of a tear.
5. Do not rinse off a hot tank with cold water. Always allow it to cool first.
6. Do not use sharp tools to clean the fryer.
7. Keep your tank clean. Check for debris buildup at the bottom of the tank, and never allow too much build-up to occur.

DESIGNED & BUILT IN USA PROFESSIONAL COOKING EQUIPMENT
A70701 RevE 01082024
AMERICAN RANGE A Hatco Company
13592 Desmond St Pacoima CA 91331
T. 818.897.0808 Toll Free: 888.753.9898
www.AmericanRange.com

TROUBLESHOOTING GUIDE

POSSIBLE CAUSE	SUGGESTED ACTION
SYMPTOM: Burners do not come on.	
Unit is not connected to gas service	Visually check unit is plumbed to gas
Pilot is not burning	Light pilot
Thermostat is set to very low temperature	Set temperature to desired value
SYMPTOM: Fryer does not reach selected temperature.	
Unit may not have been operating long enough	Unit preheats to 350°F in about ten minutes
Thermostat may be defective	Unit will require service
Too little gas pressure, dirty gas line	Call for authorized service
SYMPTOM: General frying problems.	
Temperature too low or too high	Set unit to recommended temperature for foods being fried.
Thermostat out of calibration	Unit will require service

WARNING Always disconnect the gas service before cleaning or servicing the fryer.

DESIGNED & BUILT IN USA PROFESSIONAL COOKING EQUIPMENT
A70701 RevE 01082024
AMERICAN RANGE A Hatco Company
13592 Desmond St Pacoima CA 91331
T. 818.897.0808 Toll Free: 888.753.9898
www.AmericanRange.com

TROUBLESHOOTING GUIDE

POSSIBLE CAUSE	SUGGESTED ACTION
SYMPTOM: Oven not heating.	
Unit is not connected to gas or electrical service	Visually check unit is wired to gas or electrical service
Power switch is on	Set the power switch to COOK
Thermostat is set to very low temperature	Set temperature to desired value
Doors are open	Close the door
SYMPTOM: Oven does not reach selected temperature.	
May not have been on long enough	Unit preheats to 350°F in about ten minutes
Thermostat may be defective	Unit will require service
Too little gas pressure, dirty gas line	Call factory for authorized servicer
SYMPTOM: Convection fan does not operate.	
Unit is not connected to electrical service	Visually check unit is wired to electrical service
Power switch is off	Set the power switch to COOK
Circuit breaker is tripped	Reset the breaker, observe operation
SYMPTOM: General baking problems.	
Unit set to “standard” bake temperature	Set unit to convection bake temperature
Thermostat out of calibration	Unit will require service

⚠ WARNING Always disconnect the electrical power service before cleaning or servicing the range.

DESIGNED & BUILT IN USA
PROFESSIONAL COOKING EQUIPMENT

A70701 RevE 01082024

AMERICAN RANGE®
A Hatco Company

13592 Desmond St Pacoima CA 91331
T. 818.897.0808 Toll Free: 888.753.9898
www.AmericanRange.com

AMERICAN RANGE

A Hatco Company

WARRANTY REQUIREMENT

For reliable operation and for your own safety, this professional cooking equipment must be installed by a certified/licensed contractor.

Failure to comply will void any written or implied warranty.

In the event the equipment requires service during the standard warranty period, the receipt proving certified installation must be made available to American Range for verification.

If installation was not performed by a certified/licensed contractor, be prepared to submit a major credit card for payment for proper installation prior to service.

© 2023 American Range All Rights Reserved

DESIGNED & BUILT IN USA
PROFESSIONAL COOKING EQUIPMENT

A70701 RevF 12042023

13592 Desmond St Pacoima CA 91331
T. 818.897.0808 Toll Free: 888.753.9898
www.AmericanRange.com