SERVICE MANUAL



CS500 Series Rack Ovens

CS500G1	**ML-132593**
CS500G2	**ML-132594**
CS500E1	**ML-132595**
CS500E2	**ML-132596**

- NOTICE -

This Manual is prepared for the use of trained Hobart Service Technicians and should not be used by those not properly qualified.

This manual is not intended to be all encompassing. If you have not attended a Hobart Service School for this product, you should read, in its entirety, the repair procedure you wish to perform to determine if you have the necessary tools, instruments and skills required to perform the procedure. Procedures for which you do not have the necessary tools, instruments and skills should be performed by a trained Hobart Service Technician.

The reproduction, transfer, sale or other use of this manual, without the express written consent of Hobart, is prohibited.

This manual has been provided to you by ITW Food Equipment Group LLC ("ITW FEG") without charge and remains the property of ITW FEG, and by accepting this manual you agree that you will return it to ITW FEG promptly upon its request for such return at any time in the future.

A product of Baxter MFG. Co., Inc 19220 State Route 162 East Orting, WA 98360

F46010 Rev. C (0326)

TABLE OF CONTENTS

1. GENERAL 3
IMPORTANT FOR YOUR SAFETY 3
CS500 SERIES SERVICE UPDATES 4
INTRODUCTION 4
UNPACKING 4
LOCATION 5
CLEARANCE DIMENSIONS 5
TESTING THE GAS SUPPLY PIPING SYSTEM 5
INSTALLATION CODES AND STANDARDS 5
SPECIAL TOOLS 6
CS500G1 GAS OVEN SPECIFICATIONS 6
CS500G2 GAS OVEN SPECIFICATIONS 8
CS500E1 ELECTRIC OVEN SPECIFICATIONS 10
CS500E2 ELECTRIC OVEN SPECIFICATIONS 12

2. INSTALLING OVEN 15
BEFORE INSTALLATION 15
LOADING DOOR UNCRATING 15
OVEN SECTIONS 16
FLOOR / THRESHOLD 26
STEAM SYSTEM 27
DOOR HANDLE 29
DOOR ASSEMBLY 30
DOOR SWITCH ACTUATOR 31
DOOR SWEEP 32
RACK CARRIER - C STYLE RACK LIFT 32
RACK CARRIER - B STYLE RACK LIFT 36
HOOD ASSEMBLY 37
HOOD VENTING (GAS ONLY) 40
HOOD AIR BAFFLES 41
CAULK OVEN 42
INITIAL START-UP 42
INITIAL START-UP INFORMATION MATERIAL 45
FINAL CHECKS 48
HARDWARE REFERENCE GUIDE 48

1. GENERAL

IMPORTANT FOR YOUR SAFETY

THIS MANUAL HAS BEEN PREPARED FOR PERSONNEL QUALIFIED TO INSTALL GAS EQUIPMENT, WHO SHOULD PERFORM THE INITIAL FIELD START-UP AND ADJUSTMENTS OF THE EQUIPMENT COVERED BY THIS MANUAL

POST IN A PROMINENT LOCATION THE INSTRUCTIONS TO BE FOLLOWED IN THE EVENT THE SMELL OF GAS IS DETECTED. THIS INFORMATION CAN BE OBTAINED FROM THE LOCAL GAS SUPPLIER

IN THE EVENT OF A POWER FAILURE, DO NOT ATTEMPT TO OPERATE THIS DEVICE.

KEEP AREA AROUND OVEN CLEAR OF COMBUSTIBLES.

DO NOT OBSTRUCT COMBUSTION AND VENTILATION OPENING ON THE OVEN.

IMPORTANT
IN THE EVENT A GAS ODOR IS DETECTED, SHUT DOWN UNITS AT MAIN SHUTOFF VALVE AND CONTACT THE LOCAL GAS COMPANY OR GAS SUPPLIER FOR SERVICE.

FOR YOUR SAFETY
DO NOT STORE OR USE GASOLINE OR OTHER FLAMMABLE VAPORS OR LIQUIDS IN THE VICINITY OF THIS OR ANY OTHER APPLIANCE

WARNING
IMPROPER INSTALLATION, ADJUSTMENT, ALTERATION, SERVICE OR MAINTENANCE CAN CAUSE PROPERTY DAMAGE, INJURY OR DEATH. READ THE INSTALLATION, OPERATING AND MAINTENANCE INSTRUCTIONS THOROUGHLY BEFORE INSTALLING OR SERVICING THIS EQUIPMENT.

FOR YOUR SAFETY
AN ATTACHMENT POINT FOR FALL PREVENTION IS LOCATED ON TOP, IN THE CENTER OF THE OVEN. WHEN WORKING ON TOP OF OVEN, BE SURE TO SECURELY ATTACH SAFETY HARNESS TO FALL PREVENTION ATTACHMENT POINT.

FOR YOUR SAFETY

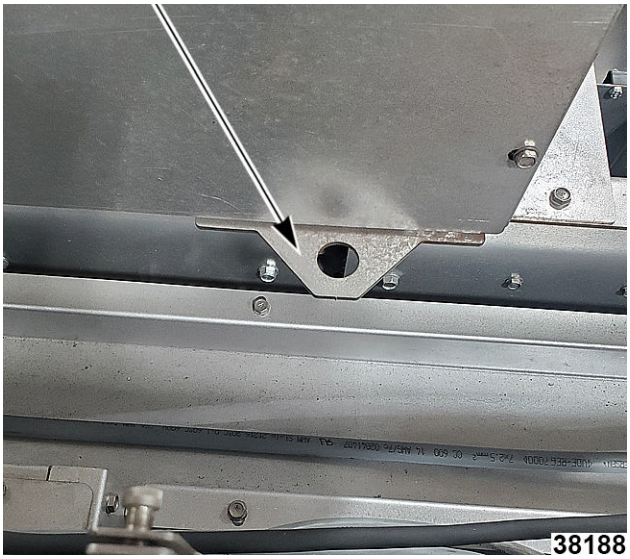

Fig. 1

CS500 SERIES SERVICE UPDATES

March 2026

- Updated FLOOR / THRESHOLD.
- Updated RACK CARRIER - C STYLE RACK LIFT.

August 2025

- Added CS500E1 ELECTRIC OVEN SPECIFICATIONS and CS500E2 ELECTRIC OVEN SPECIFICATIONS.

INTRODUCTION

General

CS500G2 rack ovens hold two single racks or one double rack.

Oven features:

- Powered rack lift with high temperature bearings and a clutch rotating system designed to stop the rack in the event of a jam without damage to the rotation motor or losing rack alignment.
- Digital programmable controller with flush flooring, and field reversible bake chamber door.

All of the information, illustrations and specifications contained in this manual are based on the latest product information available at the time of printing.

Heating

The rack oven reaches baking temperatures of 350° in approximately 20 minutes; however, a 30 minute preheat is recommended to fully heat the steam generator.

Steaming System

Standard on all rack ovens. It is a self-contained spherical cast steam system providing excellent steaming conditions.

UNPACKING

NOTICE

Any shipping damage should be acknowledged in the presence of the freight carrier and noted on the freight bill. Shipping damage is not covered under warranty.

Remove the crating from the oven exterior, check for possible shipping damage. If the oven is found to be damaged after unpacking, save the packaging material and contact the carrier within 5 days of delivery.

NOTE: If the location has multiple ovens, keep the serial numbered crates together.

LOCATION

NOTICE

To reduce the risk of fire, the appliance is to be installed on non-combustible surface only, with no combustible material within 18 inches above the appliance. The appliance is to be mounted on floors of non-combustible construction with noncombustible flooring and surface finish and with no combustible material against the underside, or on non-combustible slabs or arches having no combustible material against the underside. Such construction shall in all cases extend not less than 12 inches beyond the equipment on all sides.

Oven not provided with a canopy hood must be installed under a ventilation hood.

The floor must be level with surrounding area with a maximum slope of 1/8" per foot up to 3/4" maximum in all directions. Floor anchors require a minimum 1" thick solid floor substrate.

A level floor area must be prepared before assembling oven. The floor area should be at least 104"D x 74"W for double rack oven and 94"D x 57"W for single rack oven, to accommodate the oven footprint and door swing. Check the facilities floor area at the threshold and door swing opening location to determine if facilities floor will need to be reworked.

NOTE: To allow for proper operation of loading door, the first 48" of floor in front of oven **must** be level, or slope slightly downward away from oven. Any upward slope will cause difficulty opening/closing door and unnecessary wear of bottom of door seal, and will increase the likelihood of improper seal at bottom of door.

Do not obstruct the flow of combustion and ventilation air. Keep the appliance area free and clear from combustibles.

Make sure there is an adequate supply of make-up air in the room to allow for combustion.

The electrical diagram is located on the inside of the heat exchanger compartment door.

CLEARANCE DIMENSIONS

Oven is UL/CSA Listed for zero clearance for back and side walls. A back clearance of 1" to 4" is recommended for plumbing rear drain connection.

Top of oven requires a minimum of 24" clearance for servicing accessibility.

TESTING THE GAS SUPPLY PIPING SYSTEM

When test pressures exceed 1/2 psig (14" W.C.) (35.6 cm W.C.) (3.5 kPa), the oven and its individual shutoff valve must be disconnected from the gas supply piping system.

When test pressures are 1/2 psig (14" W.C.) (35.6 cm W.C.) (3.5 kPa) or less, the oven must be isolated from the gas supply piping system by closing its individual shutoff valve.

INSTALLATION CODES AND STANDARDS

CS500 ovens must be installed in accordance with:

United States

1. State and local codes.
2. National Fuel Gas Codes, ANSI Z223.1 (latest edition), available from American Gas Association, 1515 Wilson Boulevard, Arlington, VA 22209.
3. ANSI/NFPA 96, Standard for Ventilation Control & Fire Protection of Commercial Cooking Operations (latest edition), available from National Fire Protection Association, Batterymarch Park, Quincy, MA 02269.
4. National Electrical Code, ANSI/NFPA-70 (latest edition).
5. NSF/ANSI 4 - 2007e Standard for Commercial Cooking, Rethermalization and Powered Hot Food Holding & Transport Equipment.

Canada

1. Local codes.
2. CAN/CGA-B149-1, Installation for Natural Gas Burning Appliances and Equipment (latest edition).
3. CAN/CGA-B149-2, Installation for Propane Burning Appliances and Equipment (latest edition).
4. Canadian Electrical Code, Part 2, CSA Standard C22.1 (latest edition).

Plumbing Connections

1. Water and waste piping and connections shall comply with the International Plumbing Code 2003, International Code Council (ICC), or to the Uniform Plumbing Code 2003, International Association of Plumbing and Mechanical Officials (IAPMO).

NOTE:

Plumbing connections must comply with applicable sanitary, safety and plumbing codes and provide adequate backflow protection to comply with applicable federal, state and local codes.

SPECIAL TOOLS

- Inclined manometer - Dwyer Cat. #1227 or equivalent.
- Combustion analyzer meter Bacharach Fyrite Insight Plus Featuring B-SMART Sensors (Order from Bakery Support).
- Rotary hammer / hammer drill to drill holes in floor for anchor bolts.
- 3/8" masonry drill bit to drill holes in floor for anchor bolts.
- Temperature tester (thermocouple type) with 10' lead.
- Gauges for checking air shutters Part No. 01-1M5689-00001 (shipped with oven).
- Draft meter BACHARACH Model 13-3000 DCL 24490 or equivalent.
- Dolly wheel Part No. 01-1M2335-00001.
- Mini laser level self-leveling with tripod Harbor Freight No. 92703-OVGA.
- 2-ton foldable shop hoist Harbor Freight No. 35915-4VGA for lifting oven section.
- 3/8" chain 20 ft. long with a 4700 lbs. load rating Harbor Freight No. 40461-7VGA used with hoist.
- Two 7/16" X 5-1/2" bolts used with hoist.
- Two 7/16" nuts used with hoist.
- Four 7/16" fender washers used with hoist.
- Loctite® 242™ Part No. 00-520228.
- 1/4" Drop-In Anchor Set Tool (3/16" Tip) Part No. 01-100V4-0073A **(not supplied with oven hardware)**.

CS500G1 GAS OVEN SPECIFICATIONS

1. **WATER:**

   1/2" NPT, 30-75 PSI cold water required, customer to install in-line filter, shutoff valve and line strainer.

2. **DRAIN:**

   6-1/4" (front) or 7" (rear) connection A.F.F. SEE NOTES. Route to air-gap drain. Do not slope drain upwards. Rear drain provided. Front drain compatible but not provided.

   Rear Drain: 1/2" NPTF.

   Front Drain: 1/2" NPTF (when accessory kit is ordered).

3. **POWER:**

   Two supplies required. 120/60/1 20A dedicated circuit required and one of the following voltage options.

Voltage	Full Load AMPS
208 - 240/60/1	8.8 - 7.6 AMPS
208 - 240/60/3	5.0 - 4.4 AMPS
440 - 480/60/3	2.4 - 2.2 AMPS

4. **GAS:**

   Natural Gas (N.G.)

   1" NPT, (N.G. rated 1025 BTU/CU. FT. SP. GR. 0.60-0.70).

   Liquified Propane Gas (L.P.G.)

   1" NPT, (L.P.G. rated 2440 BTU/CU.FT., SP. GR. 1.52).

	Natural Gas	Liquified Propane Gas
BTU/HR	180,000	180,000
INLET PRESSURE	5.0" - 10.0" W.C.	12.0" - 14.0" W.C.
MANIFOLD PRESSURE	3.5" W.C.	10.0" W.C.

5. **HOOD VENT (Type II Applications Only):**

   8" DIA connection collar. Customer to supply duct and ventilator fan per state and local codes. Air proving switch factory installed and integrated with burner system operation. Oven provided relay with maximum 10A 1/2 H.P. @ 120V output for fan operation. If larger, use oven relay to control additional separately powered contactor / relay for hood

fan. Chamber vents are factory ducted to this integral hood. 600 CFM required, 0.6" W.C. static pressure drop through hood. Type B gas vent can be used except when bake products are grease laden.

NOTES:

1. A.F.F.: Above finished floor.
2. Customer responsible to finish and install all utilities to and from oven.
3. All services must comply with all Federal, State and Local codes.

NOTICE

To reduce the risk of fire, the appliance is to be installed on non-combustible surface only, with no combustible material within 18 inches above the appliance. The appliance is to be mounted on floors of non-combustible construction with non-combustible flooring and surface finish and with no combustible material against the underside, or on non-combustible slabs or arches having no combustible material against the underside. Such construction shall in all cases extend not less than 12 inches beyond the equipment on all sides.

4. The floor must be of non-combustible material, and must be level with surrounding area with a maximum slope of 1/8" per foot up to 3/4" maximum in all directions. Floor anchors require a minimum 1" thick solid floor substrate.
5. Oven is UL/C-UL classified and CSA (AGA/CGA) approved for 0" clearance on the side and rear walls. Unit requires 1" to 4" clearance for rear drain connection.
6. Top of oven requires a minimum of 24" for service accessibility.
7. Customer responsible to install flue piping. Flue must be vented outside of building.
8. Manufacturer reserves the right to make changes in sizes and specifications.

Export Ratings

1. **WATER:**

   1/2" NPT, 2.1-5.2 Bar cold water required, customer to install in-line filter, shut off valve and line strainer. Flow rate of 8 l/min.

2. **DRAIN:**

   6-1/4" (front) or 7" (rear) connection A.F.F. CS500G1 GAS OVEN SPECIFICATIONS. Route to air-gap drain. Do not slope drain upwards. Rear drain provided. Front drain compatible but not provided.

   Rear Drain: 1/2" NPTF.

   Front Drain: 1/2" NPTF (when accessory kit is ordered).

3. **POWER:**

   Two supplies required. Control Circuit: 100/50/60/1 or 208-240/50/1.

   1 kVA transformer supplied for control circuit operation voltage of 110V. This is a multifunction transformer, so output voltage should be verified before operation. Some wiring may be required to obtain proper output voltage.

   Oven fan (1.1 kW) 200V/50-60Hz/3PH/5.3A or 380- 415V/50Hz/3PH/ 2.8 - 2.5A.

4. **GAS:**

   Natural Gas (N.G.)

   1" NPT (N.G. Rated 38.2 Mj/m3 or 9120 Kcal/m3 SP Gr 0.60-0.70).

   Liquefied Propane Gas (LPG)

   1" NPT (LPG Rated 90.9 Mj/m3 or 21710 Kcal/m3 SP Gr 1.52).

	Natural Gas	Liquified Propane Gas
RATING	45,400 Kcal/hr	45,400 Kcal/hr
INLET PRESSURE	12.7 - 25.4 cm W.C.	30.5 - 35.6 cm W.C.
MANIFOLD PRESSURE	8.9 cm W.C.	25.4 cm W.C.
RATING	190 Mj/hr	190 Mj/hr
INLET PRESSURE	1.25 - 2.50 kPa	3.00 - 3.50 kPa
MANIFOLD PRESSURE	0.87 kPa	2.50 kPa

NOTE: Pressure not to exceed 35.6 cm W.C. or 3.5 kPa.

5. **HOOD VENT:**

   20.3 cm DIA. Connection collar. Customer is to supply duct and ventilator fan per federal and/or local codes. Chamber vent (steam) and combustion exhaust are discharged into the hood. An air proving switch is factory installed and integrated with burner system operation. If

proper ventilation is not provided, burner will not operate. Oven provides a relay to activate a customer supplied and powered contactor/relay, so that when oven is powered up external fan will operate. The hood requires a minimum of 17.0 m^3/min for safe operation. For fan calculation purposes you should assume 0.15 kPa resistance through the hood.

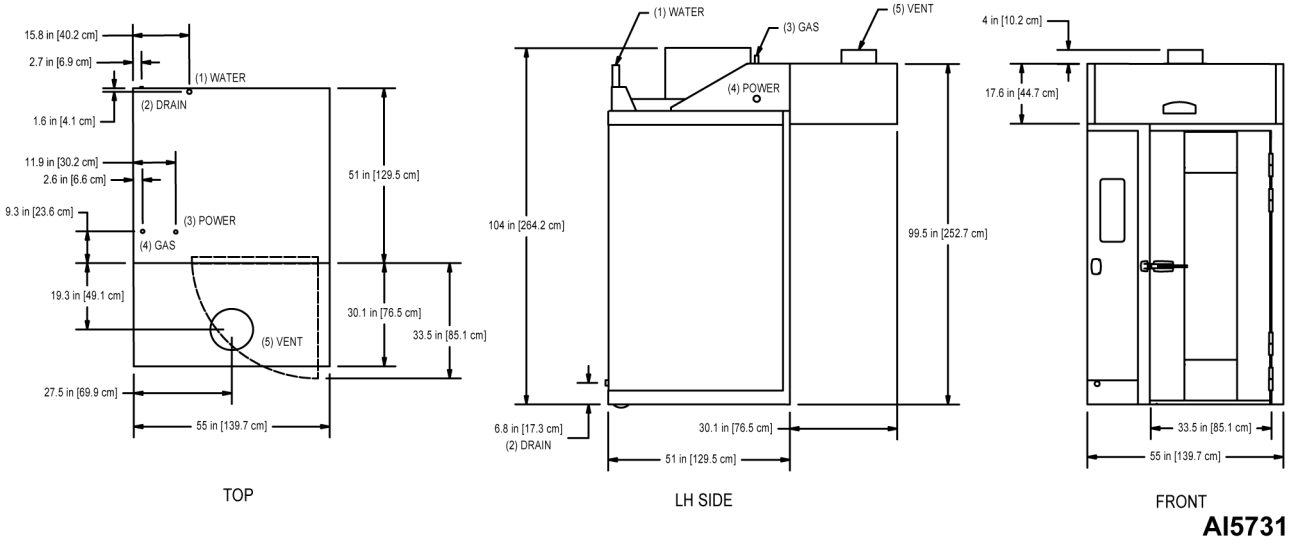

Fig. 2

CS500G2 GAS OVEN SPECIFICATIONS

1. **WATER:**

   1/2" NPT, 30-75 PSI cold water required, customer to install in-line filter, shutoff valve and line strainer.

2. **DRAIN:**

   6-1/4" (front) or 7" (rear) connection A.F.F. SEE NOTES. Route to air-gap drain. Do not slope drain upwards. Rear drain provided. Front drain compatible but not provided.

NOTE: Access to left side of oven needed to route front drain.

Rear Drain: 1/2" NPTF.

Front Drain: 1/2" NPT (when accessory kit is ordered).

3. **POWER:**

   Two supplies required.

   120/60/1 20 AMP dedicated circuit required and one of the following voltage options.

Voltage	Full Load AMPS
208 - 240/60/1	8.8 - 7.6
208-240/60/3	5.0 - 4.4
440 - 480/60/3	2.4 - 2.2

4. **GAS:**

   Natural Gas (N.G.)

   1-1/4" NPT, W.C.N.G. (N.G. rated 1025 BTU/CU. FT. SP. GR. 0.60 - 0.70).

   Liquefied Propane Gas (L.P.G.)

   1-1/4" NPT, W.C.L.P.G. (L.P.G. rated 2440 BTU/CU.FT., SP. GR. 1.52).

	Natural Gas	Liquefied Propane Gas
BTU/HR	275,000	275,000
INLET PRESSURE	5.0"-10.0" W.C.	10.0"-14.0" W.C.
MANIFOLD PRESSURE	3.5" W.C.	8.75" W.C.

5. **HOOD VENT (Type II Applications Only):**

   10" dia. connection collar. Air proving switch factory installed and integrated with burner

system operation. Oven provided relay with maximum 10A 1/2 H.P. @ 120V output for fan operation. If larger, use oven relay to control additional separately powered contactor / relay for hood fan. Customer to supply duct and ventilator fan per state and local codes. Chamber vents are factory ducted to this integral hood. 750 CFM required, 0.6" W.C. static pressure drop through hood. Type B gas vent can be used except when bake products are grease laden.

NOTES:

1. A.F.F.: Above finished floor.
2. Customer responsible to finish and install all utilities to and from oven.
3. All services must comply with all Federal, State and Local codes.

NOTICE

To reduce the risk of fire, the appliance is to be installed on non-combustible surface only, with no combustible material within 18 inches above the appliance. The appliance is to be mounted on floors of non-combustible construction with non-combustible flooring and surface finish and with no combustible material against the underside, or on non-combustible slabs or arches having no combustible material against the underside. Such construction shall in all cases extend not less than 12 inches beyond the equipment on all sides.

4. The floor must be of non-combustible material, and must be level with surrounding area with a maximum slope of 1/8" per foot up to 3/4" maximum in all directions. Floor anchors require a minimum 1" thick solid floor substrate.

NOTE: To allow for proper operation of loading door, the first 48" of floor in front of oven **must** be level, or slope slightly downward away from oven. Any upward slope will cause difficulty opening/closing door and unnecessary wear of bottom of door seal, and will increase the likelihood of improper seal at bottom of door.

5. Oven is UL/C-UL classified and CSA (AGA/CGA) approved for 0" clearance on the side and rear walls. Unit requires 1" to 4" clearance for rear drain connection.
6. Top of oven requires a minimum of 24" for service accessibility.
7. Customer responsible to install flue piping. Flue must be vented outside of building.
8. Manufacturer reserves the right to make changes in sizes and specifications.

Export Ratings

1. **WATER:**

   1/2” NPT, 2.1-5.2 Bar cold water required, customer to install in-line filter, shut off valve and line strainer. Flow rate of 8 l/min.

2. **DRAIN:**

   6-1/4" (front) or 7" (rear) connection A.F.F. Route to air-gap drain. Do not slope drain upwards. Rear drain provided. Front drain compatible but not provided.

NOTE: Access to left side of oven needed to route front drain.

Rear Drain: 1/2" NPTF.

Front Drain: 1/2" NPTF (when accessory kit is ordered).

3. **POWER:**

   Two supplies required. Control circuit: 100/50/60/1 or 208-240/50/1.

   1 kVA transformer supplied for control circuit operation voltage of 110V. This is a multifunction transformer, so output voltage should be verified before operation. Some wiring may be required to obtain proper output voltage.

   Oven fan (1.1kW) operates @ 200/50/60/3A or 380-415/50/3, 2.8-2.5A.

4. **GAS:**

   Natural Gas (N.G.)

   1-1/4” NPT (N.G. Rated 38.2Mj/m3 or 9120 Kcal/m3 SP Gr 0.60-0.70).

   Liquefied Propane Gas (LPG)

   3/4” NPT (LPG Rated 90.9Mj/m3 or 21710 Kcal/m3 SP Gr 1.52).

	Natural Gas	Liquefied Propane Gas
RATING	69,300 Kcal/hr	69,300 Kcal/hr
INLET PRESSURE	12.7 - 25.4 cm W.C.	30.5 - 35.6 cm W.C.
MANIFOLD PRESSURE	8.9 cm W.C.	22.22 cm W.C.
RATING	290 Mj/hr	290 Mj/hr

	Natural Gas	Liquefied Propane Gas
INLET PRESSURE	1.25 - 3.50 kPa	3.00 - 3.50 kPa
MANIFOLD PRESSURE	0.87 kPa	2.18 kPa

NOTE: Pressure not to exceed 35.6 cm W.C. or 3.5 kPa.

5. **HOOD VENT:**

25.4 cm dia. connection collar. Customer is to supply duct and ventilator fan per federal and/or local codes. Chamber vent (steam) and combustion exhaust are discharged into the hood. An air proving switch is factory installed and integrated with burner system operation. If proper ventilation is not provided, burner will not operate. Oven provides a relay to activate a customer supplied and powered contactor/relay, so that when oven is powered up external fan will operate. The hood requires a minimum of 21.25 m^3/min for safe operation. For fan calculation purposes you should assume 0.15 kPa resistance through the hood.

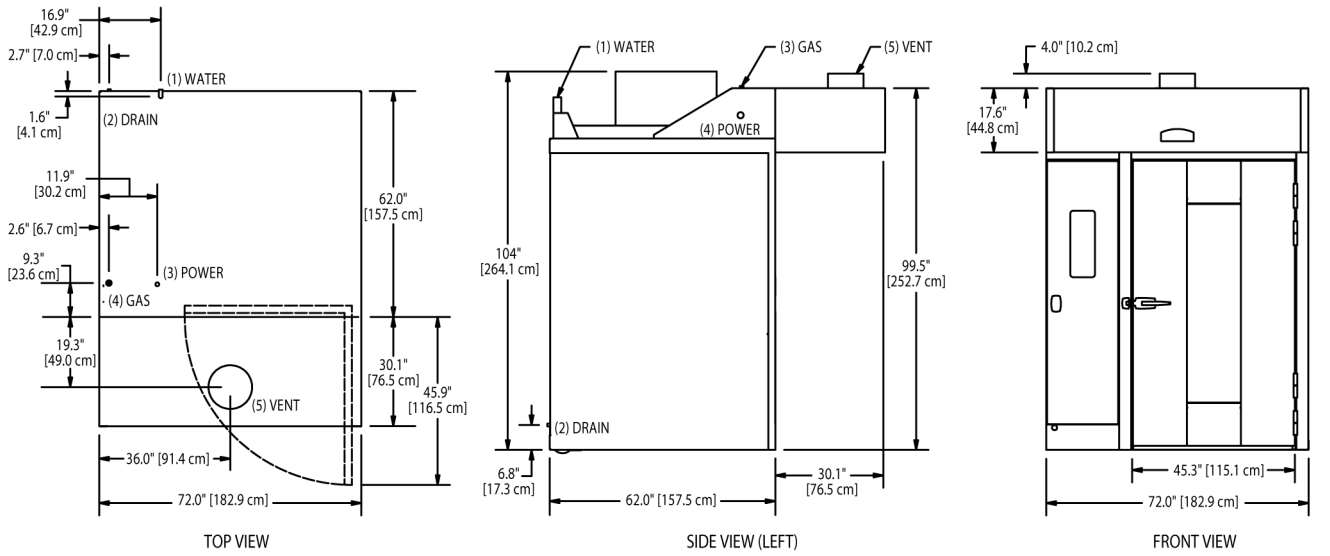

Fig. 3

CS500E1 ELECTRIC OVEN SPECIFICATIONS

1. **WATER:**

   1/2" NPT, 30-75 PSI cold water required, customer to install in-line filter, shut off valve and line strainer.

2. **DRAIN:**

   6-1/4" (front) or 7" (rear) connection A.F.F. Route to air-gap drain. Do not slope drain upwards. Rear drain provided. Front drain compatible, but not provided.

   Rear Drain: 1/2" NPTF.

   Front Drain: 1/2" NPTF (when accessory kit is ordered).

3. **POWER:**

   Two supplies required.

   120/60/1 20A dedicated circuit required and one of the following voltage options.

   Heating Circuit: KW rating in following chart per supply voltage.

   Blower Motor: 1-1/2 H.P.

Voltage	Full Load AMPS	Heaters Rating
208/60/3	100 AMPS	34 KW
208 - 240/60/3	76 - 87 AMPS	26 - 34 KW
440 - 480/60/3	40 - 43 AMPS	29 - 34 KW

4. **HOOD VENT:**

   8" DIA connection collar. Customer to supply duct and ventilator fan per state and local codes. Oven provided relay with max. 10 amp

1/2 H.P. @ 120V output for fan operation. If larger, use oven relay to control additional separately powered contactor / relay for hood fan. Chamber vents are factory ducted to this integral hood. 600 CFM required, 0.6" W.C. static pressure drop through hood. Customer to supply duct and ventilator fan per local code.

NOTES:

1. A.F.F.: Above finished floor.
2. Customer responsible to finish and install all utilities to and from oven.
3. All services must comply with all Federal, State and Local codes.

NOTICE

To reduce the risk of fire, the appliance is to be installed on non-combustible surface only, with no combustible material within 18 inches above the appliance. The appliance is to be mounted on floors of non-combustible construction with noncombustible flooring and surface finish and with no combustible material against the underside, or on non-combustible slabs or arches having no combustible material against the underside. Such construction shall in all cases extend not less than 12 inches beyond the equipment on all sides.

4. The floor must be of non-combustible material, and must be level with surrounding area with a maximum slope of 1/8" per foot up to 3/4" maximum in all directions. Floor anchors require a minimum 1" thick solid floor substrate.
5. Oven is UL/C-UL classified and CSA (AGA/CGA) approved for 0" clearance on the side and rear walls. Unit requires 1" to 4" clearance for rear drain connection.
6. Top of oven requires a minimum of 24" for service accessibility.
7. Customer responsible to install flue piping. Flue must be vented outside of building.
8. Manufacturer reserves the right to make changes in sizes and specifications.

Export Ratings

1. **WATER:**

   1/2” NPT, 2.1 - 5.2 Bar cold water required, customer to install in-line filter, shut off valve and line strainer. Flow rate of 8 l/min.

2. **DRAIN:**

   6-1/2" (front) or 7" (rear) connection A.F.F. SEE NOTES. Route to air-gap drain. Do not slope upwards. Rear drain provided. Front drain compatible, but not provided.

   Rear Drain: 1/2" NPTF.

   Front Drain: 1/2" NPTF (when accessory kit is ordered).

3. **POWER:**

   Two supplies required. 100V/50-60Hz/1PH or 208-240V/50Hz/1PH.

   1/8 kVA transformer supplied for control circuit operation voltage of 110V. This is a multifunction transformer, so output voltage should be verified before operation. Some wiring may be required to obtain proper output voltage.

   Oven fan (1.1kW) operates @ 200V/50-60Hz/3PH, 5.3 amps or 380-415V/3PH/50Hz/2.4-2.2A.

Voltage	Full Load AMPS	Heaters Rating
200/50 - 60/3	74 AMPS	24 KW
380 - 415/50/3	46 - 50 AMPS	29 - 34 KW

4. **HOOD VENT:**

   20.3 cm DIA. Connection collar. Customer is to supply duct and ventilator fan per federal and/or local codes. Chamber vent (steam) and combustion exhaust are discharged into the hood. Oven provides a relay to activate a customer supplied and powered contactor/relay, so that when oven is powered up external fan will operate. The hood requires a minimum of 17.0 m^3/min for safe operation. For fan calculation purposes you should assume 0.15 kPa resistance through the hood. Customer to supply duct and ventilator fan per local code.

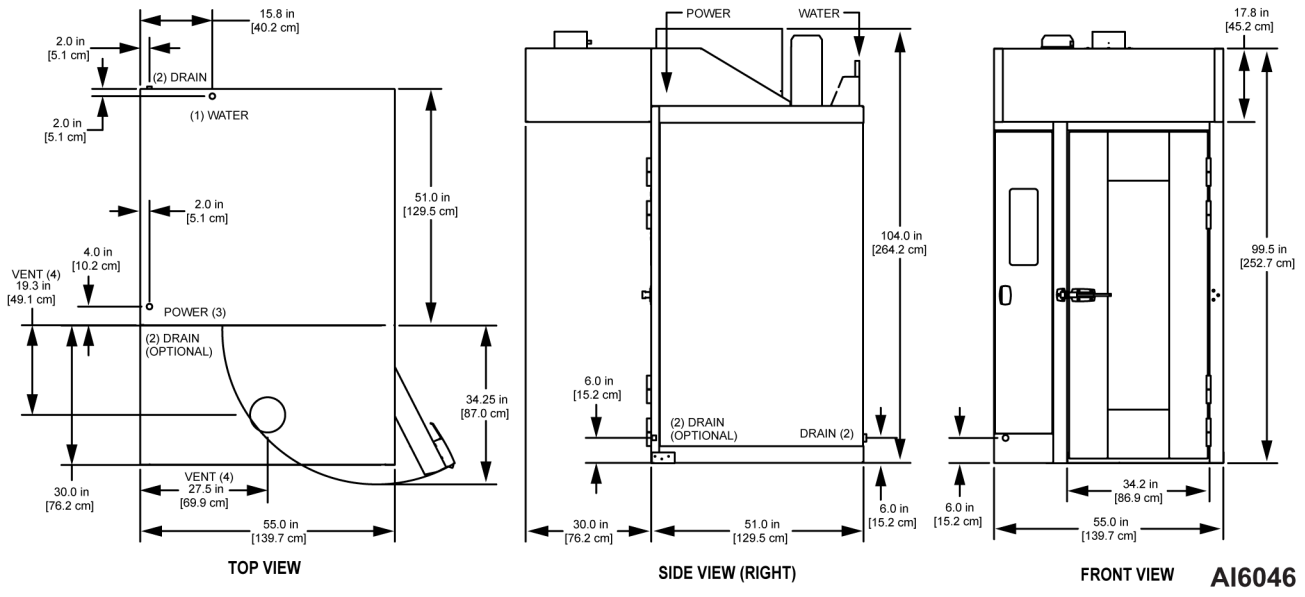

Fig. 4

CS500E2 ELECTRIC OVEN SPECIFICATIONS

1. **WATER:**

   1/2" NPT, 30-75 PSI cold water required, customer to install in-line filter, shut off valve and line strainer.

2. **DRAIN:**

   2-3/4" (front) or 5 1/2" (rear) connection A.F.F. Route to air-gap drain. Do not slope drain upwards. Plug the drain connection that is not in use. Kit provided to extend drain to either side of oven.

   Rear Drain: 1/2" NPTF.

   Front Drain: 1/2" NPTF (when accessory kit is ordered).

3. **POWER:**

   Two supplies required.

   120/60/1 20A dedicated circuit required and one of the following voltage options.

   Heating Circuit: KW rating in following chart per supply voltage.

   Blower Motor: 1-1/2 H.P.

Voltage	Full Load AMPS	Heaters Rating
208/60/3	146.4 AMPS	51.3 KW
208 - 240/60/3	111.2 - 127.2 AMPS	38.5 - 51.3 KW
440 - 480/60/3	59.1 - 64.1 AMPS	43 - 51.3KW

4. **HOOD VENT:**

   10"DIA connection collar. Customer to supply duct and ventilator fan per state and local codes. Oven provided relay with max. 10 amp 1/2 H.P. @ 120V output for fan operation. If larger, use oven relay to control additional separately powered contactor / relay for hood fan. Customer to supply duct and ventilator fan per state and local codes. Chamber vents are factory ducted to this integral hood. 750 CFM required, 0.6" W.C. static pressure drop through hood. Customer to supply duct and ventilator fan per local code.

NOTES:

1. A.F.F.: Above finished floor.
2. Customer responsible to finish and install all utilities to and from oven.
3. All services must comply with all Federal, State and Local codes.

NOTICE

To reduce the risk of fire, the appliance is to be installed on non-combustible surface only, with no combustible material within 18 inches above the appliance. The appliance is to be mounted on floors of non-combustible construction with noncombustible flooring and surface finish and with no combustible material against the underside, or on non-combustible slabs or arches having no combustible material against the underside. Such construction shall in all cases extend not less than 12 inches beyond the equipment on all sides.

4. The floor must be of non-combustible material, and must be level with surrounding area with a maximum slope of 1/8" per foot up to 3/4" maximum in all directions. Floor anchors require a minimum 1" thick solid floor substrate.
5. Oven is UL/C-UL classified and CSA (AGA/CGA) approved for 0" clearance on the side and rear walls. Unit requires 1" to 4" clearance for rear drain connection.
6. Top of oven requires a minimum of 24" for service accessibility.
7. Customer responsible to install flue piping. Flue must be vented outside of building.
8. Manufacturer reserves the right to make changes in sizes and specifications.

Export Ratings

1. **WATER:**

   1/2” NPT, 2.1 - 5.2 Bar cold water required, customer to install in-line filter, shut off valve and line strainer. Flow rate of 8 l/min.

2. **DRAIN:**

   6-1/2" (front) or 7" (rear) connection A.F.F. SEE NOTES. Route to air-gap drain. Do not slope upwards. Rear drain provided. Front drain compatible, but not provided.

   Rear Drain: 1/2" NPTF.

   Front Drain: 1/2" NPTF (when accessory kit is ordered).

3. **POWER:**

   Two supplies required. 100V/50-60Hz/1PH or 208-240V/50Hz/1PH.

   1/8 kVA transformer supplied for control circuit operation voltage of 110V. This is a multifunction transformer, so output voltage should be verified before operation. Some wiring may be required to obtain proper output voltage.

   Oven fan (1.1kW) operates @ 200V/50-60Hz/3PH/5.3A or 380-415V 3PH 50 Hz 2.4-2.2A.

Voltage	Full Load AMPS	Heaters Rating
200/50 - 60/3	108 AMPS	36 KW
380 - 415/50/3	68 - 73AMPS	43 - 51 KW

4. **HOOD VENT:**

   25.4 cm DIA. Connection collar. Customer is to supply duct and ventilator fan per federal and/or local codes. Chamber vent (steam) and combustion exhaust are discharged into the hood. Oven provides a relay to activate a customer supplied and powered contactor/relay, so that when oven is powered up external fan will operate. The hood requires a minimum of 21.2 m^3/min for safe operation. For fan calculation purposes you should assume 0.15 kPa resistance through the hood. Customer to supply duct and ventilation fan per local code.

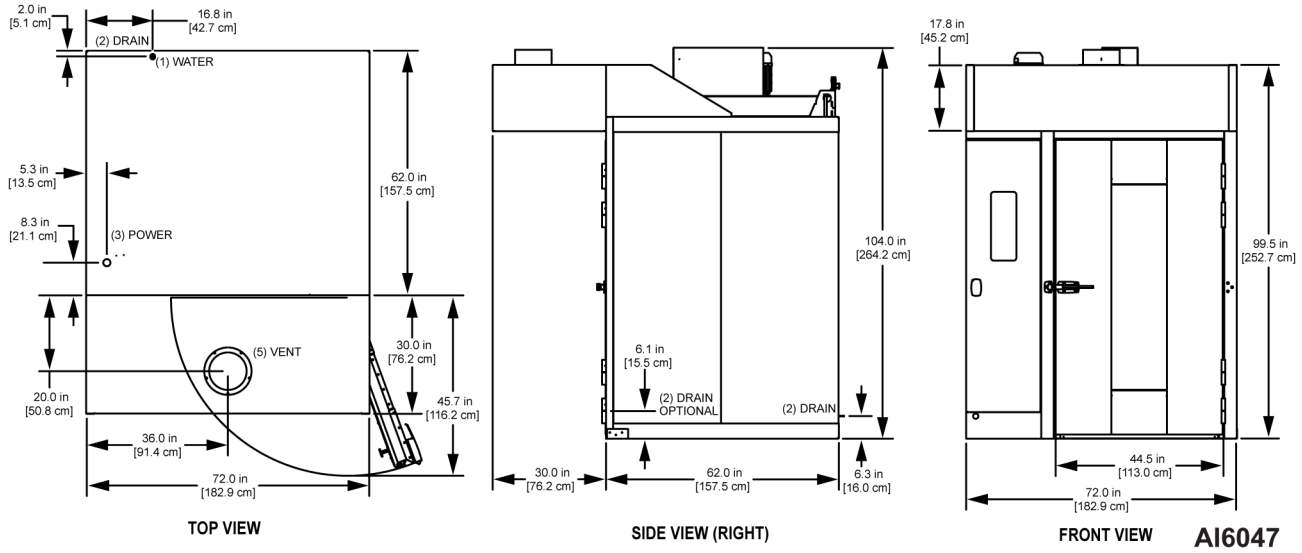
2.0 in
[5.1 cm]
16.8 in
[42.7 cm]
(2) DRAIN
(1) WATER
5.3 in
[13.5 cm]
8.3 in
[21.1 cm]
(3) POWER
62.0 in
[157.5 cm]
(5) VENT
30.0 in
[76.2 cm]
45.7 in
[116.2 cm]
20.0 in
[50.8 cm]
36.0 in
[91.4 cm]
72.0 in
[182.9 cm]
TOP VIEW
104.0 in
[264.2 cm]
6.1 in
[15.5 cm]
(2) DRAIN
OPTIONAL
(2) DRAIN
30.0 in
[76.2 cm]
62.0 in
[157.5 cm]
6.3 in
[16.0 cm]
SIDE VIEW (RIGHT)
17.8 in
[45.2 cm]
99.5 in
[252.7 cm]
44.5 in
[113.0 cm]
72.0 in
[182.9 cm]
FRONT VIEW
AI6047

Fig. 5

2. INSTALLING OVEN

BEFORE INSTALLATION

This manual is written for a new installation in which the oven sections can be positioned while the oven is on the shipping skids. Some installations may require that oven sections on the skids be lifted on their sides and manipulated through doorways prior to positioning sections for installation.

Prior to installing the oven, check facilities floor for being level within a maximum of 1/8" per foot, up to 3/4" in all directions using the laser level technique to determine if oven will need to be shimmed. Also check facilities floor area at the threshold and door swing opening location to determine if facilities floor will need to be reworked.

LOADING DOOR UNCRATING

⚠ WARNING

Use appropriate safe lifting precautions when handling loading door. Using four or more people is recommended; weight is in excess of 175 lbs.

The loading door must be removed prior to lifting the oven sections. See the following details on oven door removal.



Fig. 6

1. Remove hardware securing upper mounting brackets (6 bolts each bracket). Remove and discard brackets.

NOTE: Save hardware for use on front dolly wheel.



Fig. 7

2. Using four or more people and safe lifting practices, remove door from oven.

NOTE: Be mindful of sharp sheet metal edges and corners on the oven.

NOTE: Use proper PPE when removing door from oven section.

A. Slide door until every person has a good grip on door.

B. Lift and transport door to safe storage area.

NOTE: Place door on a furniture dolly if possible.

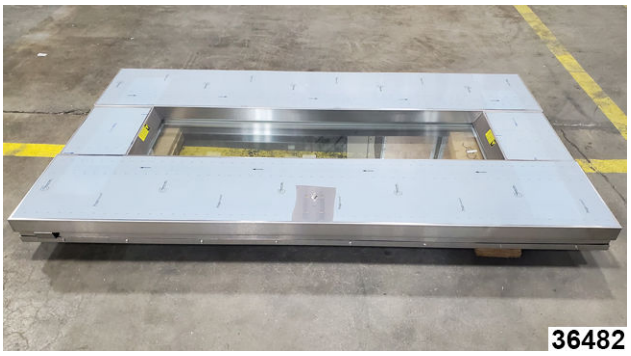

Fig. 8

3. Set door aside until needed, ensuring door is protected from damage while storing.

NOTICE

Make sure door does not sit on inner door handle (Fig. 9).

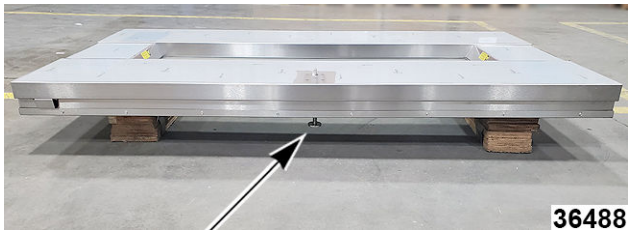

Fig. 9

4. Remove remaining mounting brackets, backing plates, screws, and 2 x 6 planks, and then discard.

NOTE: Hold backing plate (Fig. 10, Fig. 11) while removing bracket to prevent plate from dropping into the oven.

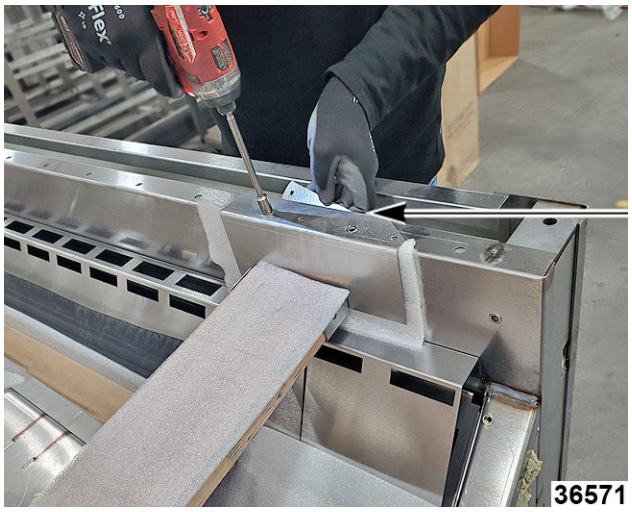

Fig. 10



Fig. 11



Fig. 12

OVEN SECTIONS

NOTICE

It is essential that correct hardware is used in the designated location. Refer to the HARDWARE REFERENCE GUIDE for hardware descriptions.

NOTE: Be sure to verify all parts in parts box are accounted for before beginning installation.

Remove all assemblies except oven sections from skids prior to lifting oven sections. In most cases, CS500G1 ovens will be shipped with sections assembled together.

1. Place oven sections as close to the final position as possible, allowing enough room to work, with sections positioned for lifting.
   A. Check for ceiling clearance. Oven is tallest when it is approximately 45 degrees to the floor during raising process. If oven section has been turned on its narrow side in order to navigate through a doorway, turn oven section back to the shipping position prior to raising.
   B. Remove bottom hold-down brackets from both pallets, but do not remove oven sections from pallets.
2. Lift oven sections upright, using the hoist technique. Both oven sections should be as close as possible, but not touching.
3. Remove lag bolt in top bracket (Fig. 13) securing skid to oven section.



Fig. 13

A. Pull bottom of the skid away from the oven to clear the Z channel.

B. Lower skid to floor, making sure the Z channel does not scratch side of oven.

C. Perform same procedure for other oven section.

4. Remove header support bracket (1, Fig. 14).

A. Remove screw (2, Fig. 14) from hinge side of bracket.

B. Move bracket and reinstall hinge screw.

C. Remove the single screw (3, Fig. 14) from header side of bracket and discard screw and bracket.

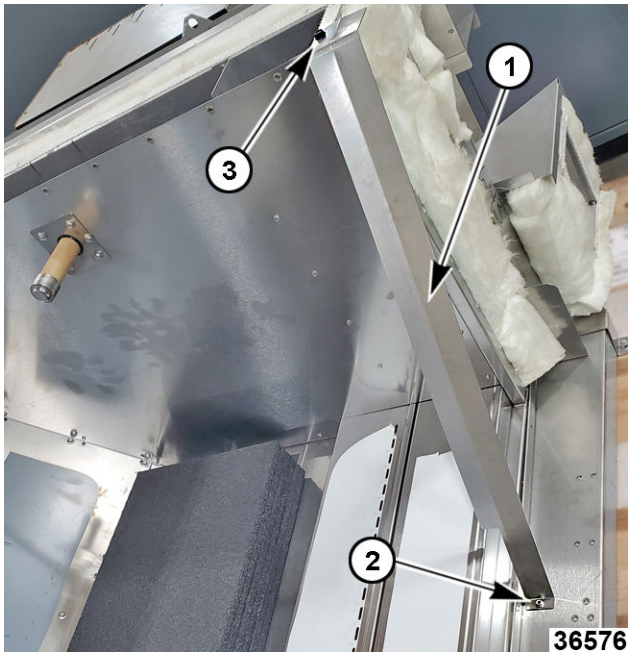

Fig. 14



Fig. 15

5. Slide oven sections together.

NOTE: Ensure ceiling offset flange slides under opposite oven section ceiling.

6. Apply silicone to the front and rear corners of the ceiling where the fiberglass tape meets.

7. Install 1/2-13 x 1-1/2" bolt (Fig. 16) with lock washer and nut in rear frame connection points of oven, both top and bottom.

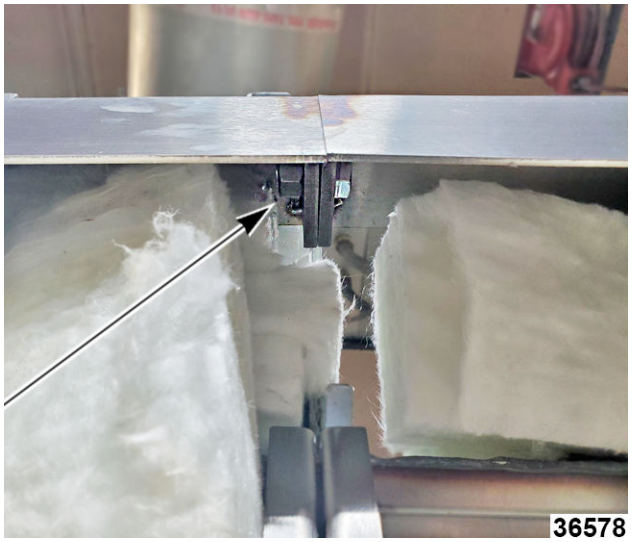

Fig. 16

8. Install 5/16-18 x 1" gimlet screws (1, Fig. 17) in upper and lower header connections.

NOTE: Ensure oven sections' upper header front surfaces (2, Fig. 17) are flush.

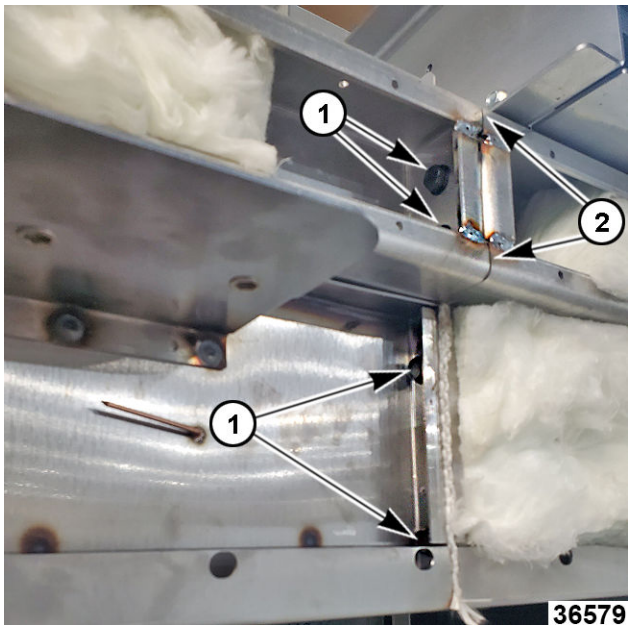

Fig. 17

NOTE: If there is difficulty aligning the holes in rear frame, oven sections may have to be manipulated using the levelers or by prying. Use care to not damage building floor.



Fig. 18

NOTE: Oven front corners may need to be moved in order to make holes in outer header align with holes in oven.

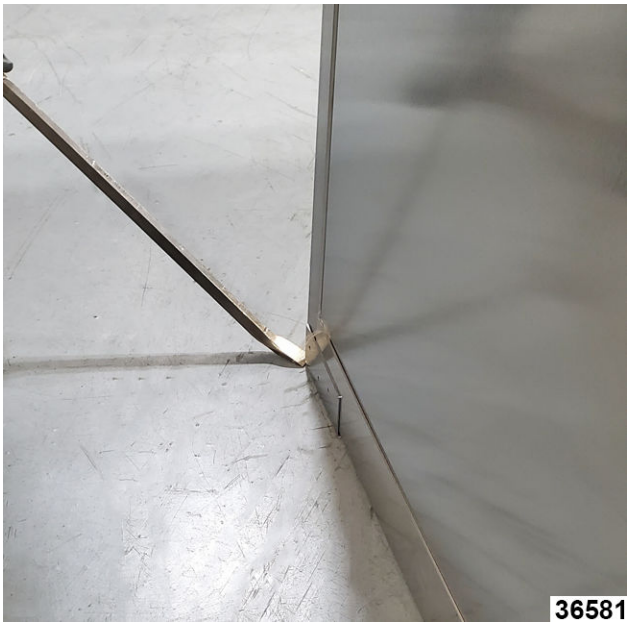

Fig. 19

9. Install 5/16-18 X 1" gimlet screws in the flanges of the mating sections around the oven perimeter, both back (Fig. 20) and top (Fig. 21).

NOTE: Start a few screws at several locations around flange to help align flange holes.



Fig. 20



Fig. 21

10. Install all flange mating section screws and ensure mating surfaces are flush in the interior and exterior of the oven before tightening screws.

NOTE: If there is difficulty aligning the mating holes in flange, oven sections may have to be manipulated using the levelers or by prying. Use care to not damage building floor.

11. For CS500G1 & CS500E1 ovens only: Install insulation cover (1, Fig. 22) onto top of oven.
12. For CS500G1 & CS500E1 ovens only: Install rotator assembly (2, Fig. 22) onto lifter assembly (3, Fig. 22).

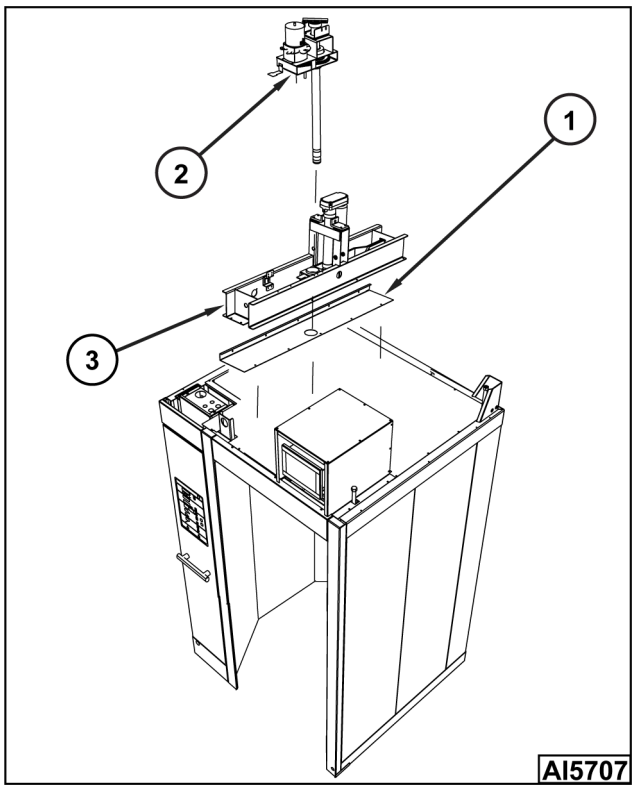

Fig. 22

13. Install upper header support plate (Fig. 23) with #10 Tek screws.

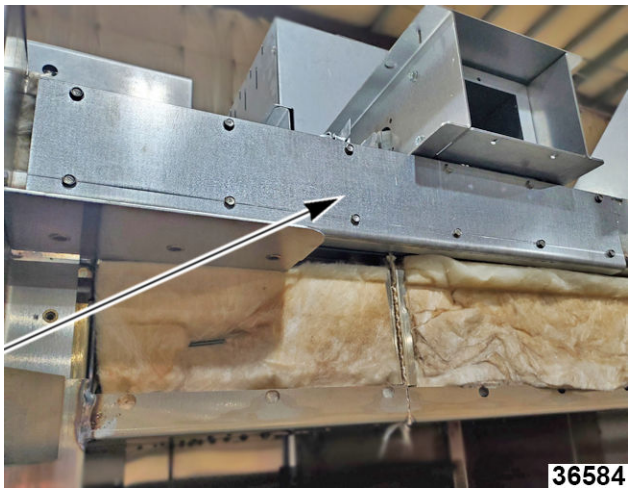

Fig. 23

14. Remove door gasket retainers to allow installation of header cover.



Fig. 24

15. Ensure header cover is flush to front of jams. Secure with four #10 Tek screws on top of header cover.
16. Install header cover by placing bottom flange of header cover behind the bottom flange of lower header and loosely secure using six 1/4-20 screws.
17. Install upper door gasket (1, Fig. 25) to upper gasket retainers (2, Fig. 25).

NOTE: DO NOT STRETCH GASKET.

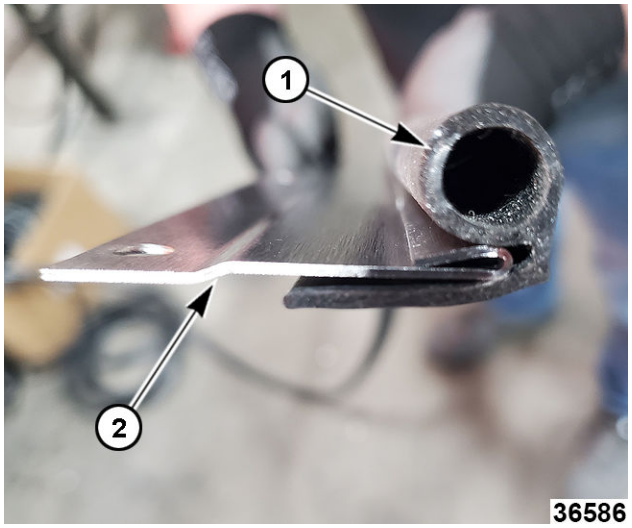

Fig. 25

A. Cut off gasket material to length of retainer.
B. Install upper and vertical door gaskets and gasket retainers (Fig. 26), then secure to oven with #10-32 gimlet screws. Ensure gaskets are straight.



Fig. 26

C. Tighten 1/4-20 screws in header cover.

18. Install 1/4-20 X 3/4" hex head serrated flange screws (Fig. 27) onto ceiling offset inside baking compartment.



Fig. 27

19. Install insulation pieces.
    A. On rear seam, bend copper studs (Fig. 28) so they are 90 degrees to the oven wall. When installing insulation, make sure it is held by these studs.



Fig. 28

B. At rear wall, place push nuts over copper studs to secure insulation.

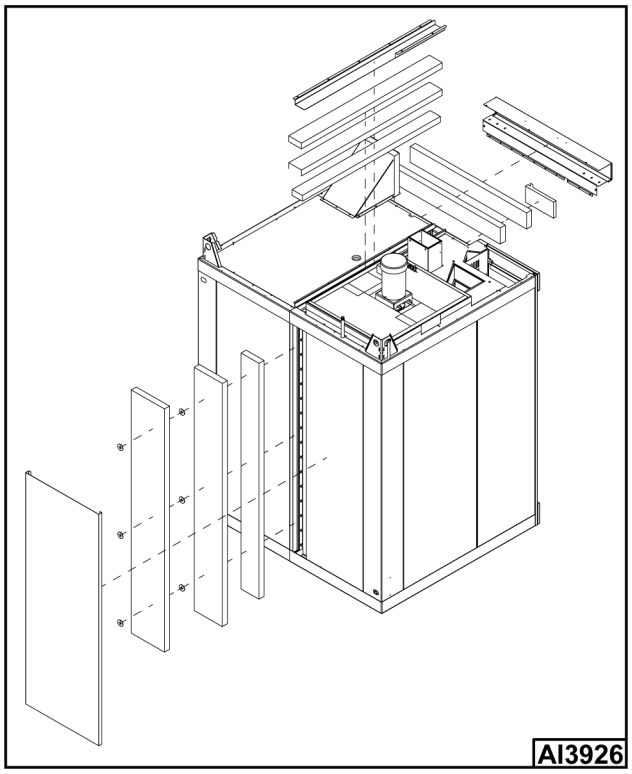

Fig. 29

20. Install rear cover panels.

NOTE: This panel will also have a layer of insulation.

A. Start top of panel (1, Fig. 30) behind top rail (2, Fig. 30) of upper frame.

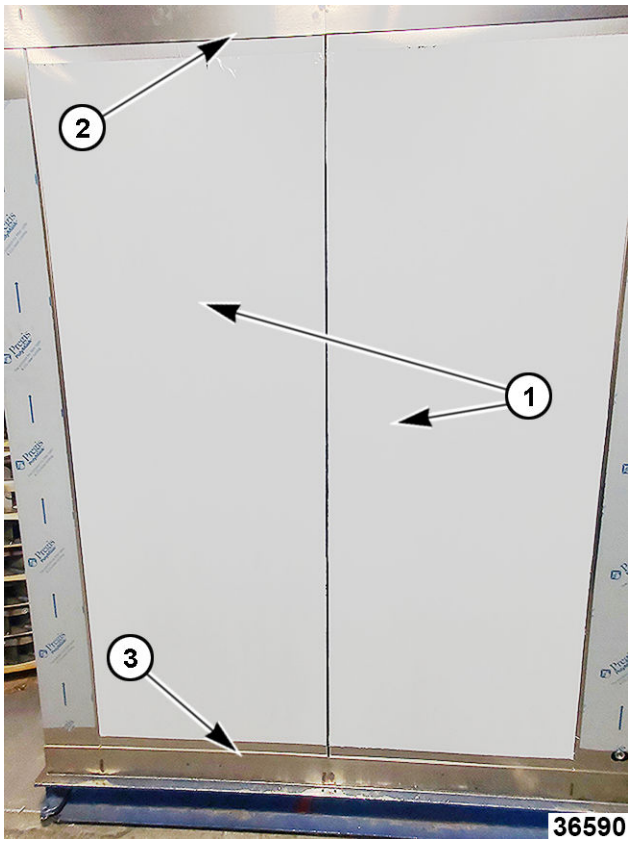

Fig. 30

B. Push the panel up until the bottom of the panel clears the bottom rail (3, Fig. 30) of the oven section frame.

C. Make sure panel is behind rail of lower frame and will rest against the stop when lowered into position.

D. Push the panel down against the stop.

21. Connect rear drain if required. If not used, install plug from front drain.

A. Using materials from provided drain kit (double rack ovens only), route drain to either side of oven.

B. Ensure drain slopes downward 1/4" per foot.

22. For CS500G2 & CS500E2 ovens only: Install insulation (Fig. 32) into ceiling channel.

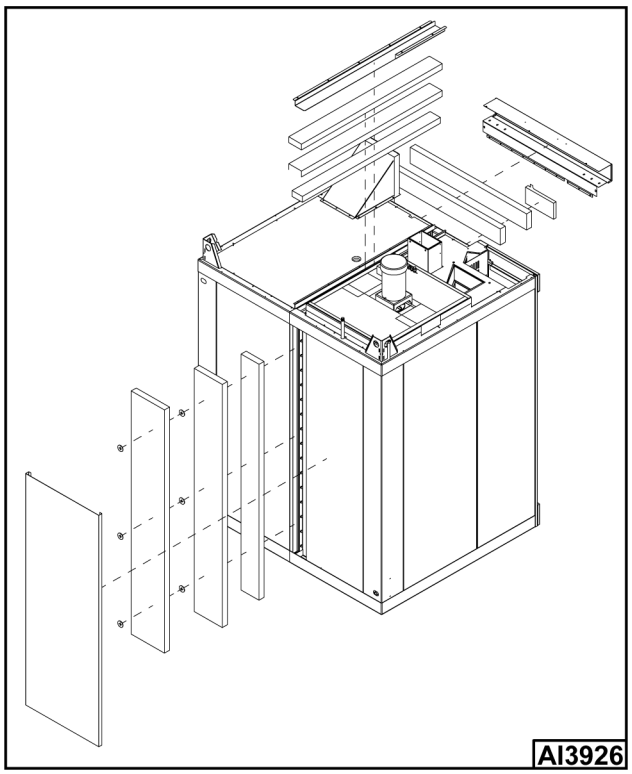

Fig. 31



Fig. 32

23. For CS500G2 & CS500E2 ovens only: Install ceiling channel cover (Fig. 33) with #10 Tek screws over ceiling channel.



Fig. 33

24. Remove junction box cover to access connection plugs for rack rotation and rack lift. Connect plugs together and install raceway to top of oven.



Fig. 34

NOTE: Gas ovens will not have junction box, but conduit directly to component. Electric double rack ovens will have an additional cover to be installed over exposed wiring.

25. If rear drain of oven is used, install before oven is placed in final location.
26. If front drain is used, refer to instructions included with kit for installation.

NOTE: Access to left side of oven is needed for installation of pipe.

27. Remove protective plastic from rear and sides of oven (areas that will not be accessible once oven is in place).

NOTICE

Do not damage building floor while installing dolly wheel or using front levelers. Use shims under floor levelers to prevent damage to building floor.

28. Remove lower latch ramp and bolts from left bottom door jamb and install dolly wheel.



Fig. 35

NOTE: Front levelers may need to be used to raise front of oven to install dolly wheel. Use care to not damage building floor.

A. Lower front oven levelers (Fig. 36) so weight of oven is on dolly wheel.

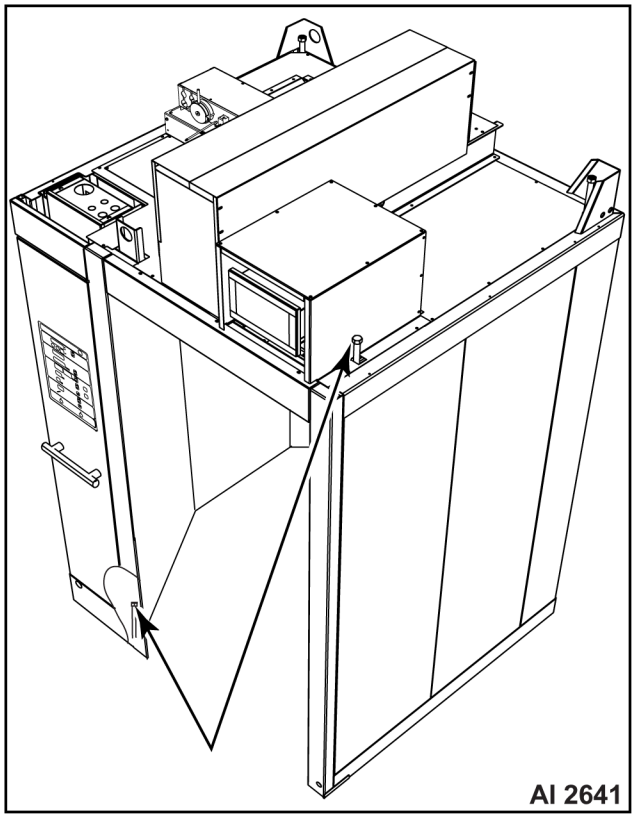

Fig. 36

B. Using rear levelers (Fig. 37), lower rear wheels to raise the back of oven completely off floor.

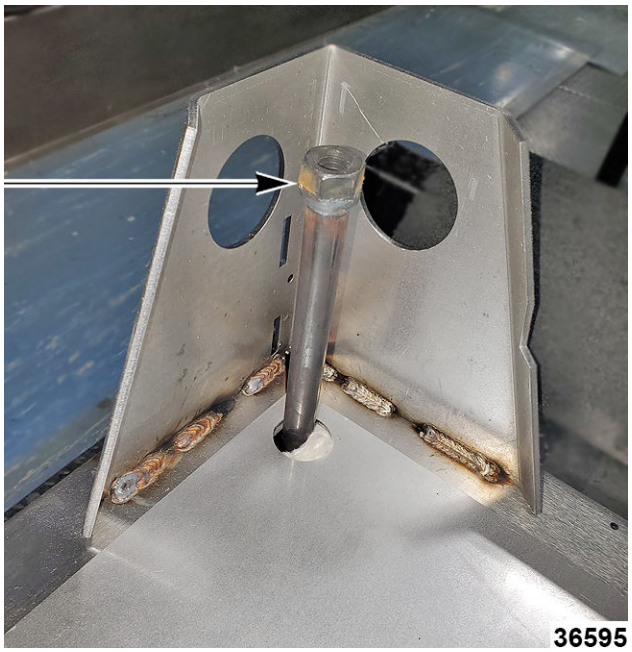

Fig. 37

NOTE: Raising rear of oven too much can cause front of oven to contact floor.

29. Move the oven into the final position before lowering.
30. Place shim(s) per height determined by laser level technique to level oven.

NOTE: Review HOST course for laser level technique.

A. Temporarily position threshold in place.

B. Verify oven is level front to back and side to side.

NOTE: If shims are required to level oven at front right corner, shims(s) will need to be placed on top of threshold underneath door jamb.

NOTE: If shims are required to level oven at rear corners, place shim(s) in front of the back wheels. If rear of oven is not accessible, place shims under heat exchanger floor and inner wall base angle.

NOTE: After oven is leveled and shimmed, raise levelers (Fig. 38) to take oven weight off all levelers.

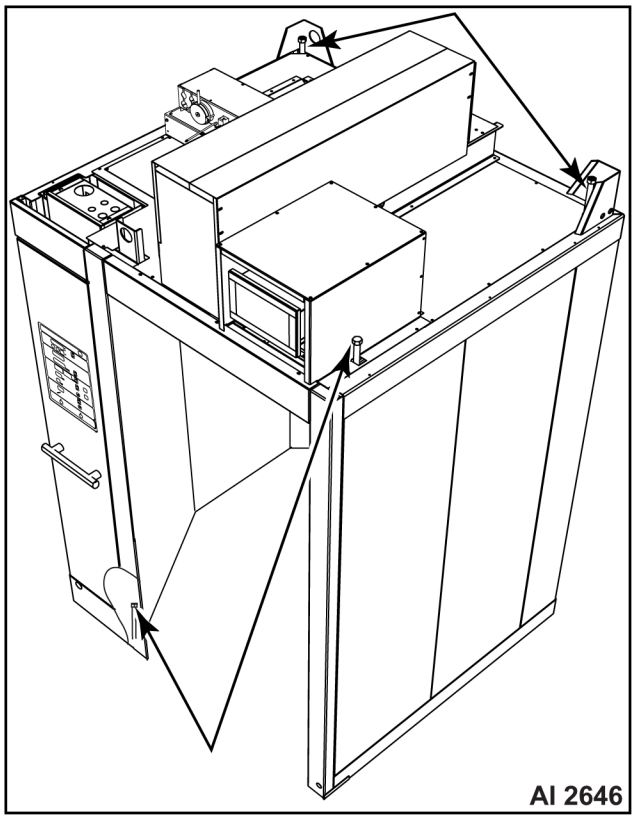

Fig. 38

31. Raise back wheels to lower oven. Weight of oven should be completely off back wheels.
32. Remove dolly wheel and replace lower latch ramp.

NOTE: Retain dolly wheel for future oven installations.

33. Place threshold into door jamb.

NOTE: Do not anchor threshold at this time.

34. Verify door opening is square.

A. Measure diagonal 'X' from top right innermost hinge screw to bottom innermost hinge screw on left door jamb.

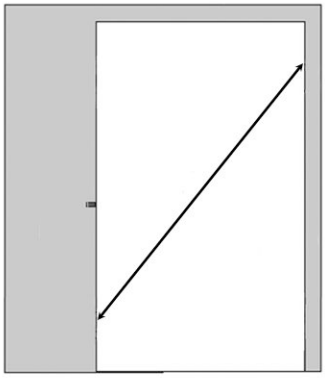

Fig. 39

B. Measure diagonal 'Y' from top left innermost hinge screw to bottom innermost hinge screw on right door jamb.

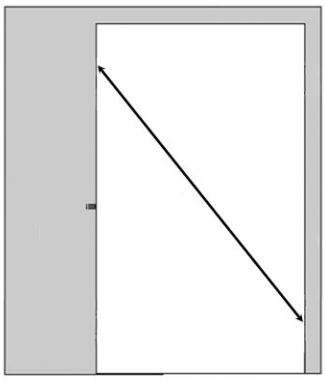

Fig. 40

C. If diagonal measurements are not within 1/8" of each other add additional shims as needed.

1) If diagonal 'Y' measurement is greater than diagonal 'X' measurement add shims under right front door jamb. Place shims on top of threshold underneath door jamb.

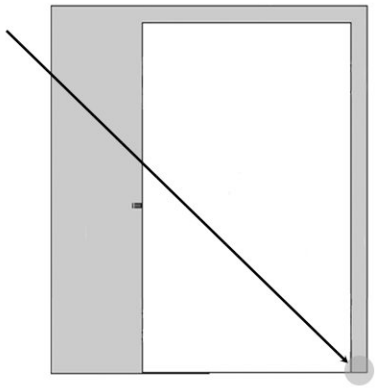

Fig. 41

2) If diagonal 'X' measurement is greater than diagonal 'Y' measurement, add shims under left front door jamb.

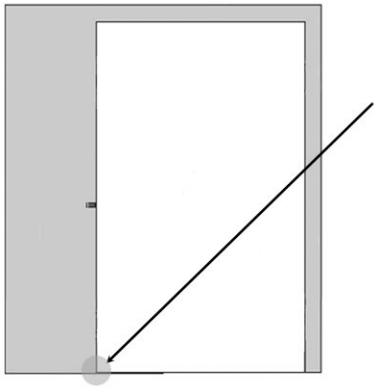

Fig. 42

D. Repeat procedure until diagonal measurements are within 1/8" of each other.

35. Install door.

NOTE: Loosen hinge bolts on door assembly to assist in door installation.

A. Position door at 90 degrees to oven near door opening.

B. Use a J bar to lift door from center bottom.

C. Position door over hinges and then lower onto hinge pins.

36. With door open, visually check if door swings toward oven (closed position) on its own.

A. If door swings toward oven, add shims to back corners of oven until door stops swinging on its own.

37. Remove bolts securing steam panel to oven.

A. Lift panel up while tilting top of panel toward center of oven to remove from oven.



Fig. 43

38. Remove screws (Fig. 44) securing drain pan cover to oven.



Fig. 44

A. Pull cover out from suction panel while lifting up right side of cover, then pushing cover toward the right rear corner of baking compartment, and then out of oven.

NOTE: Use care when removing cover not to scratch baking compartment walls.

39. Lower drain pan support bolt (Fig. 45) until bolt comes in contact with floor.

NOTE: Bolt used to support steam system weight.



Fig. 45

40. Reinstall drain pan cover.

FLOOR / THRESHOLD

1. Move threshold halfway out of oven.
2. Caulk around bottom of baking compartment walls to facility floor seam with high temp red silicone.

NOTE: Sealant used inside oven cavity must be NSF Listed; suitable for food zone and minimum 275ºC/525ºF. Sealant used on the exterior of the unit must be NSF Listed.

3. **SINGLE RACK GAS OVENS ONLY: Place 1/4" floor insulation down on facility floor inside oven.**
4. Run a bead of high temp red silicone on the entire outer edge of both floor panels (1, Fig. 46).
5. Install floor panel without offset (2, Fig. 46). Flange goes up.

NOTE: Use of hammer and 2x4 might be required to ensure corners of floor panel are seated to corners of oven cavity.

6. Run two beads of high temp red silicone (3, Fig. 46) on flange of floor panel without offset.
7. Install remaining floor panel (4, Fig. 46) with offset (5, Fig. 46). Flange goes up. This floor panel fits over the floor panel without offset.

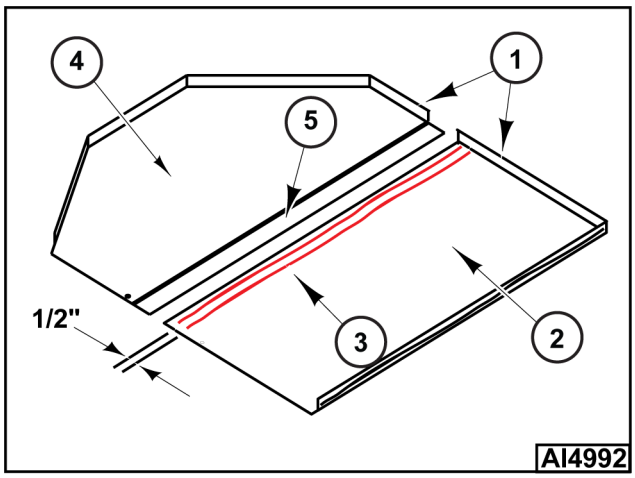

Fig. 46

8. Slide threshold under door jamb, ensuring the three threshold tabs (Fig. 47) are installed over oven floor.

NOTE: Use a hammer and 2X4 to tap threshold against oven floor. A 1/8" gap between oven floor and threshold is acceptable.

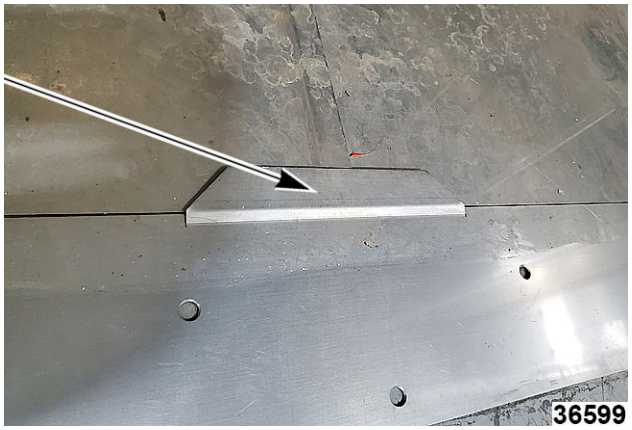

Fig. 47

NOTE: If shims were required to level oven and square the door jamb at the front right corner, place shims(s) on top of threshold underneath door jamb. Threshold is approximately one shim thick.

9. After floor is in place, run a bead of high temp red silicone where the lip of floor meets wall.
10. Install floor trim. Wait until later in the procedure to tighten screws.
11. Drill and tap into door jamb using holes in threshold as guides.

NOTE: Verify door jamb is still square before drilling and tapping holes for securing threshold to door jamb.

A. Starting on left side, secure threshold to door jamb with 10-32 X 3/4" flanged screws - 9 places total (Fig. 48).

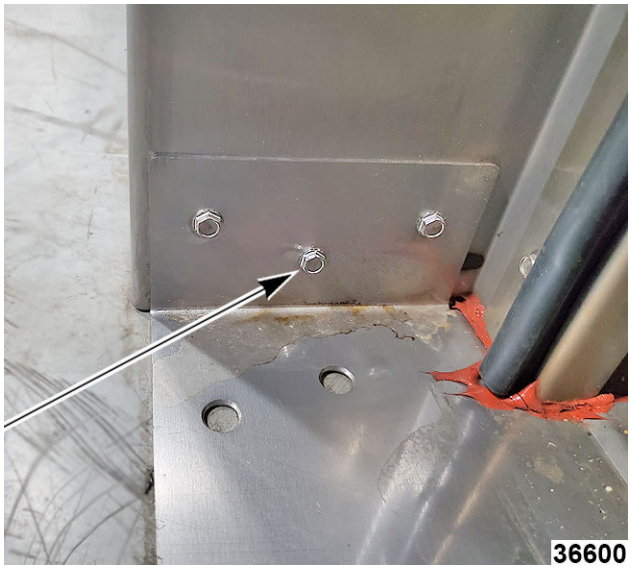

Fig. 48

12. Anchor threshold to facility floor - 8 places (Fig. 49).



Fig. 49

13. Tighten floor trim screws.
14. Caulk gap between oven floor and threshold with **GRAY** NSF listed silicone.

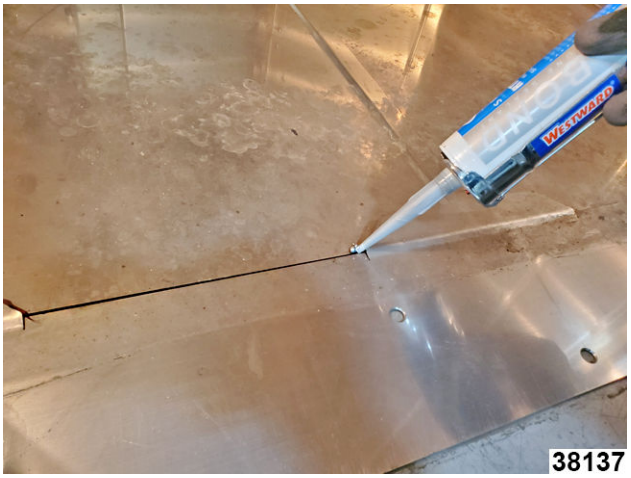

Fig. 50

15. Caulk door jamb gaps with **GRAY** NSF listed silicone.



Fig. 51

STEAM SYSTEM

1. Remove steam panel from left rear corner from oven wall.
2. Start by setting first steam ball assembly flat on the oven baking compartment floor (left rear corner).



Fig. 52

NOTE: Place first steam ball assembly on spacers to obtain correct height.

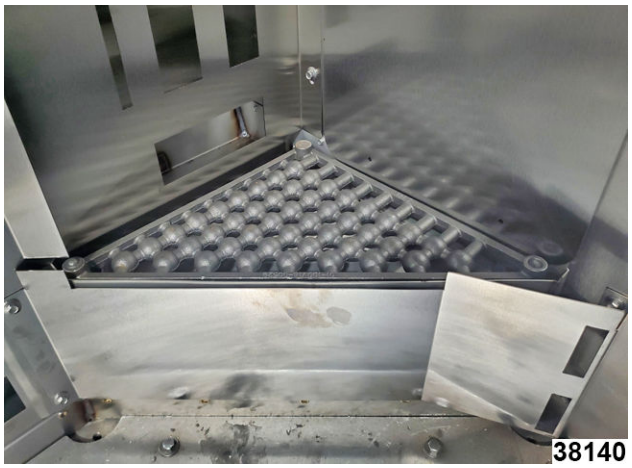

Fig. 53

3. The next steam ball assembly must be put in place by matching its male post (2, Fig. 54) with female post (1, Fig. 54) of previous assembly (total of 20 sections for CS500G2 and CS500E2 ovens, and total of 15 sections for CS500G1 and CS500E1 ovens to install).

NOTE: The assemblies will not set level if the sections are not oriented correctly.

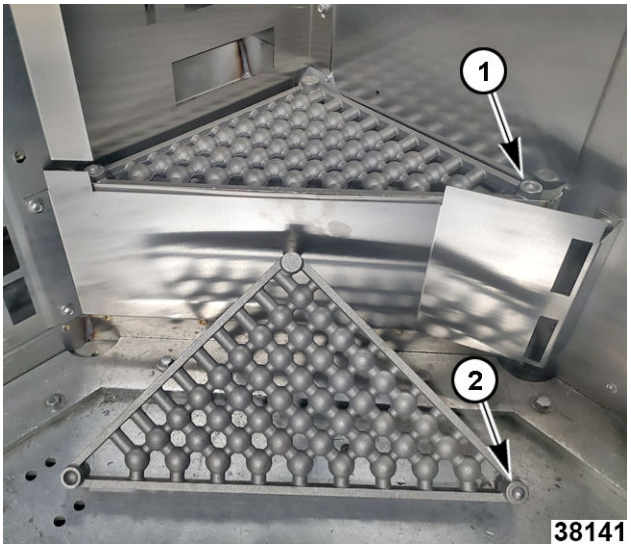

Fig. 54

4. After all assemblies are installed, position spray guard so it rests on top of steam ball assemblies.

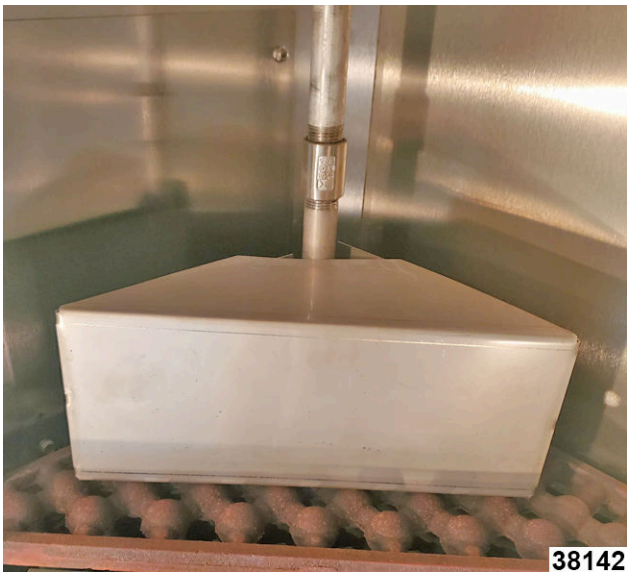

Fig. 55

5. Beginning with top assembly, install water guides over front rim of top assembly, then every other assembly (total of 7 water guides for all ovens).



Fig. 56

6. Install left steam panel (Fig. 57).



Fig. 57

7. Secure steam panel to rear baking compartment panel with 1/4-20 X 3/4" hex head serrated flange screws (Fig. 58).



Fig. 58

8. Secure steam panel to left baking compartment panel with 1/4-20 X 3/4" hex head serrated flange screws (Fig. 59).



Fig. 59

DOOR HANDLE

1. Remove door handle and latch from parts box, and mount latch to door jamb (Fig. 60), and mount handle to door (Fig. 61) using 1/4-20 flat head screws.



Fig. 60



Fig. 61

DOOR ASSEMBLY

1. Observe the following:
   A. With door closed, visually check gap around door jamb and edge of door, gap should be equal on both sides.



Fig. 62

NOTE: If door rubs against jamb or drags facility floor when opening, check door frame to verify it is square. Also, check oven for levelness. If adjusting both does not correct the problem, call Bakery Product Support. If door drags floor when opening, have customer level floor in front of oven.

   B. Adjust door hinge inward or outward until door has an air tight seal against door gasket.

NOTE: Fig. 63 shows door adjusted toward gasket.

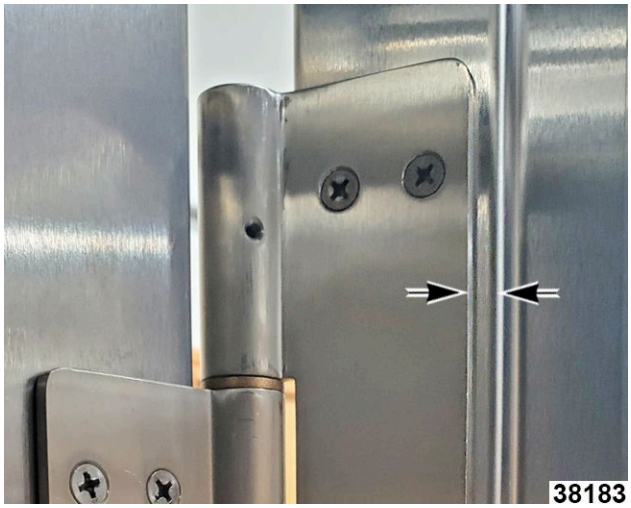

Fig. 63

NOTE: Fig. 64 shows door adjusted away from gasket.

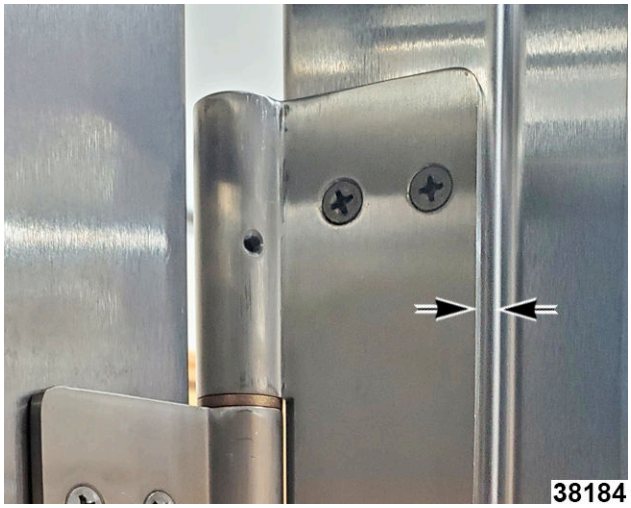

Fig. 64

2. Verify door latches properly.
   A. Insert a piece of paper between door jamb and door gasket on both sides and top of door.
   B. If paper is loose, door strike (Fig. 65) will need to be adjusted.



Fig. 65

3. To adjust door gasket seal:
   A. Place a piece of paper at bottom hinge side between door and door gasket.
   B. Close oven door and slowly pull on paper. There should be just enough drag to hold paper from falling. Repeat this procedure around door every couple of feet. If door is too tight on hinge side, loosen hinges on door and adjust door outward, reverse if too loose. For latch side adjustment, loosen screws on latch.
4. Repeat the process until desired results are obtained or call Bakery Product Support.

DOOR SWITCH ACTUATOR

1. Check door switch actuator for proper operation and adjust switch as needed.

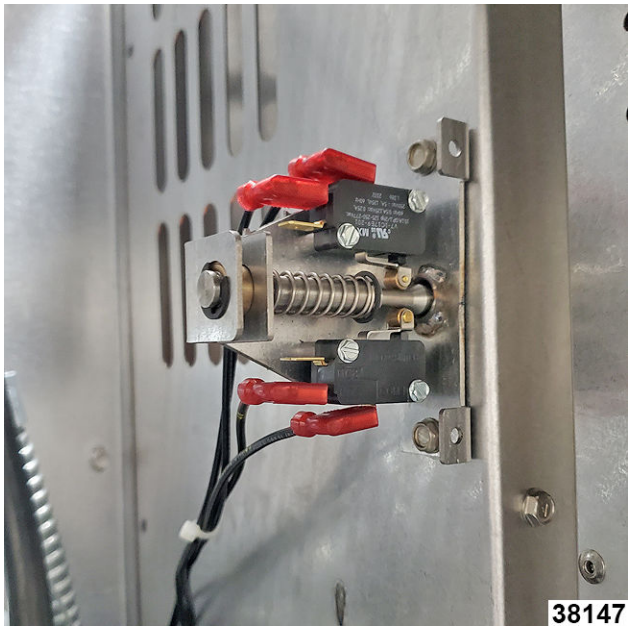

Fig. 66

DOOR SWEEP

1. Install door sweep.

NOTE: Door sweep shipped in oven parts box.

NOTE: Door sweep has slots (Fig. 67) for adjustment.

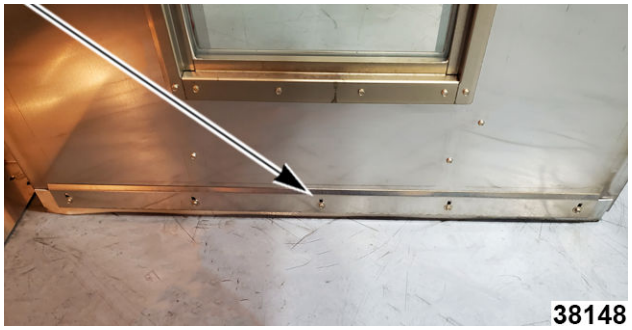

Fig. 67

2. Adjust door sweep so metal door seal plate (2, Fig. 68) is 5/16" from the highest point on oven floor (4, Fig. 68).

NOTE: Silicone strip (3, Fig. 69) should NOT touch building floor (5, Fig. 69) when door (1, Fig. 69) is open.

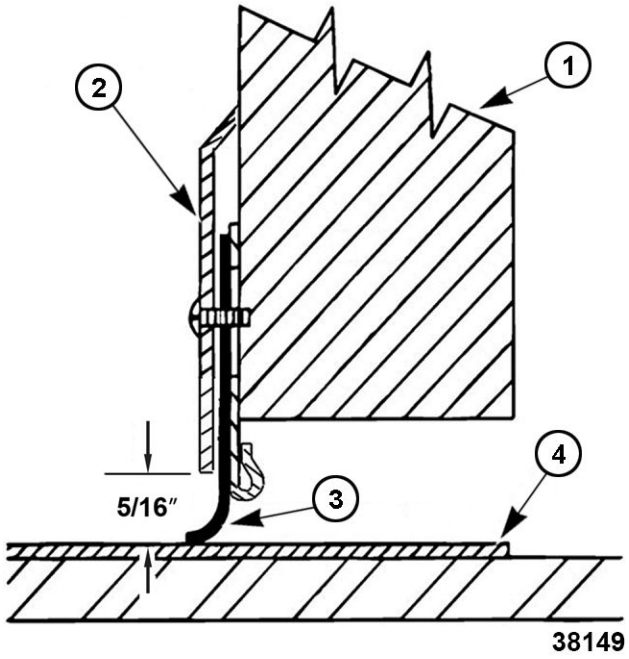

Fig. 68

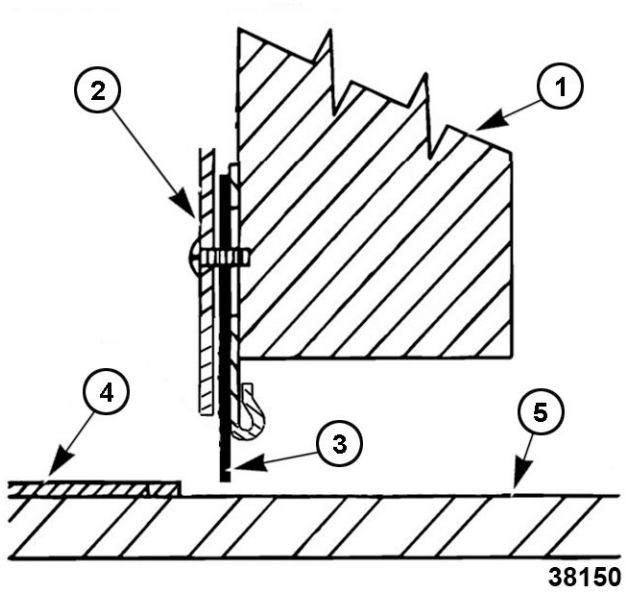

Fig. 69

RACK CARRIER - C STYLE RACK LIFT

NOTE: Perform after oven has been leveled.

1. Remove snap ring from rotation shaft and save for carrier installation. Cardboard tube can be discarded.
2. Install rack carrier.
3. Apply food grade Never Seize to set screw threads and start set screws into carrier.

4. Slide carrier onto lift mechanism shaft and install snap ring.

NOTE: Do not allow lift mechanism shaft to move upward. Hold shaft down from top of oven.

5. Roll baking rack onto carrier and check for proper carrier height.

NOTE: Carrier should be approximately 0.125" to 0.25" from rack lifting channels. Check multiple baking racks.

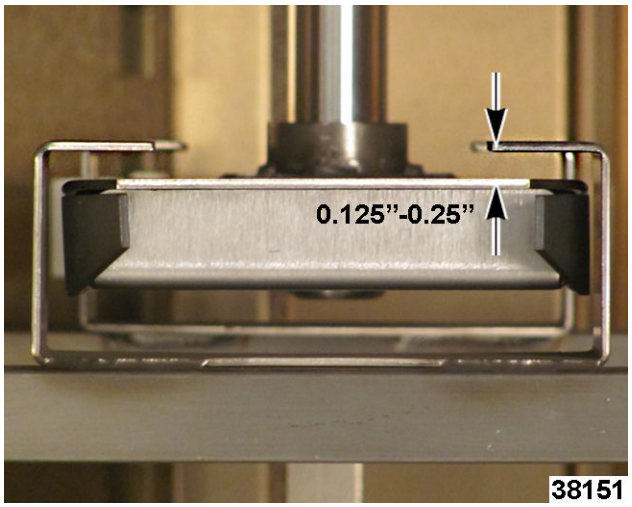

Fig. 70

A. If carrier height needs adjusted, remove baking rack from carrier and support carrier with step ladder or baking rack and blocks of wood to correct height.



Fig. 71

B. Access rotate/lift assembly at top of oven.

C. At the top of rack shaft, remove mounting screw (Fig. 72) for rotation motor capacitor.

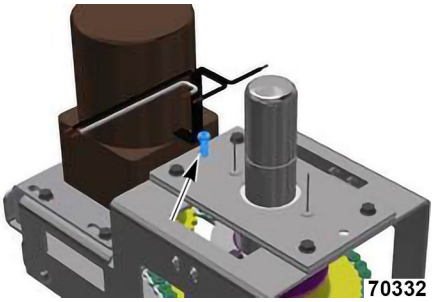

Fig. 72

D. Remove screws (Fig. 73) securing Teflon bearing bracket to rotate/lift assembly, and lift from assembly.

NOTICE

Rotation assembly might fall when hex screws are removed from shaft alignment assembly.

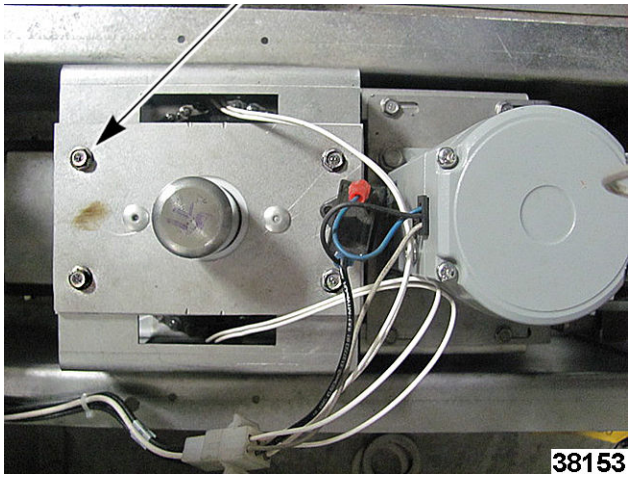

Fig. 73

E. Factory installed shim washers (Fig. 74) 5 above and 5 below retaining ring. Position shim washers above or below retaining ring for correct carrier height.



Fig. 74

IF REQUIRED - ADDITIONAL C-LIFT ADJUSTMENT FROM 71" TO 73"
If no additional C-Lift adjustment is needed, proceed to Step F.

1) Support rack carrier with oven rack and 2x4 block to remove weight from snap ring on top or rotator shaft.

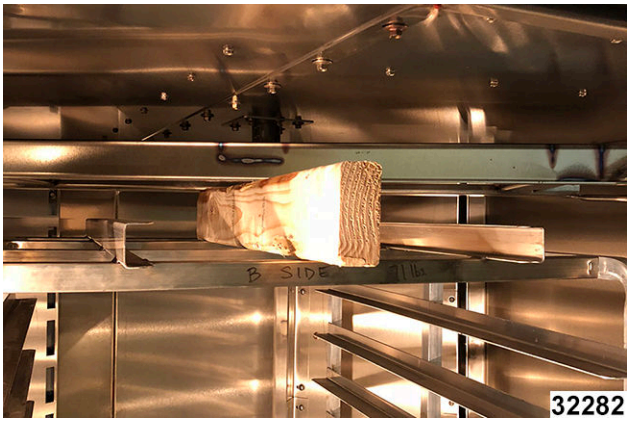

Fig. 75

2) Rotate set collar to access set screw (1, Fig. 76), then loosen set screw.

3) Remove and retain shims located on top of snap ring (2, Fig. 76).

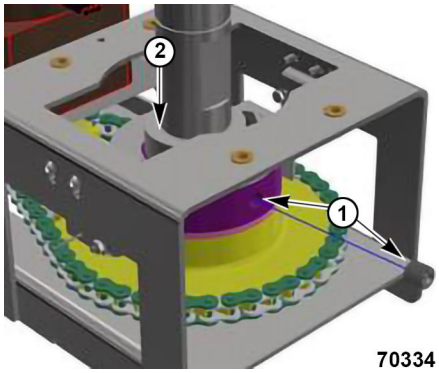

Fig. 76

4) Slide snap ring, shims, and set collar to the appropriate position:

71" Height (1, Fig. 77).

73" Height (2, Fig. 77).

Snap ring groove (3, Fig. 77).

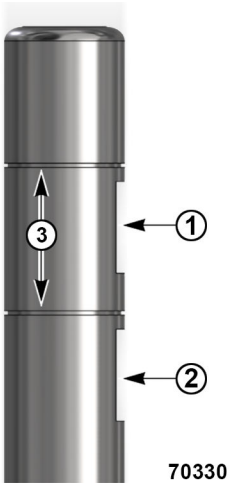

Fig. 77

5) Ensure 5 shims are installed and adjust as required for proper operation.

6) Remove 2x4 block inserted in Step 1).

NOTE: Remove 2x4 block slowly, as weight will be transferred from wood block to snap ring during removal.

7) Verify rack height is correct, adjust as required by adding or removing shims.

NOTE: Shims are approximately 1/8" thick.

8) Verify rotation shaft flat (1, Fig. 78) is aligned to set screw on set collar (2, Fig. 78).

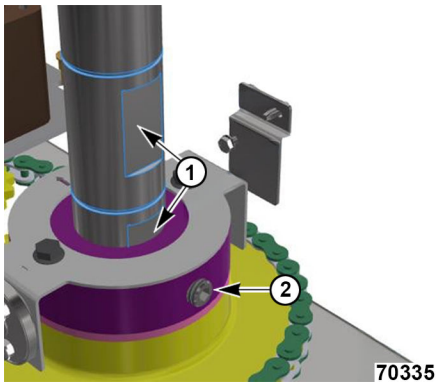

Fig. 78

9) Place carrier in the load position, and attach shaft alignment assembly with magnets facing rotation switches.

10) Tighten set collar set screw.



⚠ WARNING

Certain procedures in this section require electrical test or measurements while power is applied to the machine. Exercise extreme caution at all times and follow Arc Flash procedures. If test points are not easily accessible, disconnect power and follow Lockout/Tagout procedures, attach test equipment and reapply power to test.

11) Remove lockout / tagout.

12) Turn on oven.

13) Position rack out of home position.

14) Open and close door to ensure proper clearance, rotation, and home position.

15) Enter time to trigger automatic rotation.

16) Customer's rack may need to be used to adjust the home position overshoot/undershoot.

17) Open and close door to ensure proper clearance, rotation, and home position.

NOTE: Locate customer's shortest and tallest "C" type racks.

18) With door open and rack carrier centered in door opening, push shortest rack up to the front of rack carrier.

19) Verify distance between the underside of upper section of rack's "C" channel and top surface of rack carrier.

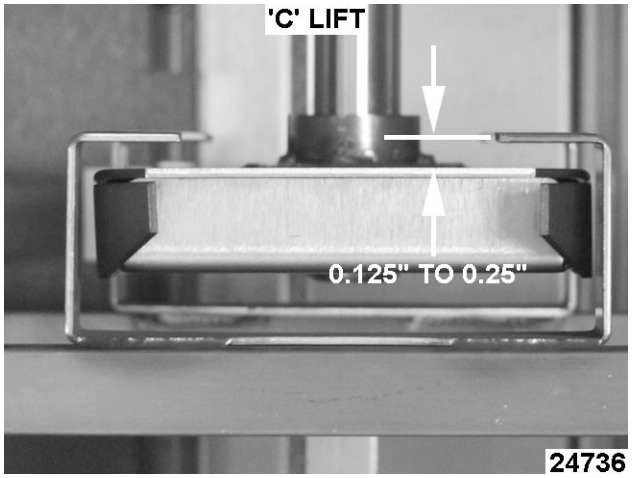

Fig. 79

F. If carrier needs to be lower than snap ring will allow, access clevis pins on rear of lift and lower both equally.

NOTE: Always lower or raise left and right clevis pins (2, Fig. 80) the same distance. One hole location (1, Fig. 80) equals 1/4" adjustment.

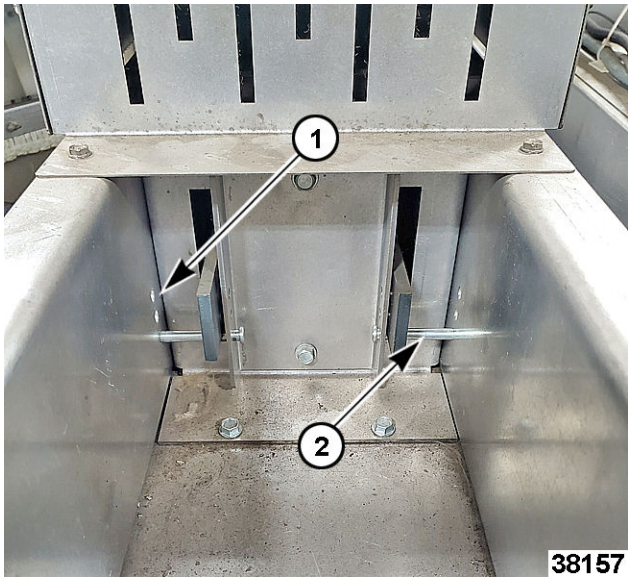

Fig. 80

6. Install snap ring and Teflon plate, and tighten set screw.

NOTE: It may be necessary to lift up on rotator body while tightening set screw to make shims flush with the snap ring.

NOTE: Check all racks, and verify set screw on carrier is fully tightened.

7. Remove shipping ties (Fig. 81) from vent lid.



Fig. 81

RACK CARRIER - B STYLE RACK LIFT

NOTE: Perform after oven is leveled.

1. Remove snap ring, shim washers, and cardboard shipping tube from lift shaft.
2. Install rack carrier.
3. Apply food grade Never Seize to set screw threads and start set screws into carrier.
4. Slide carrier onto lift mechanism shaft and install snap ring.
5. Roll baking rack onto carrier and check for proper carrier height.

NOTE: Carrier should be approximately 0.125" to 0.25" from rack lifting channels. Check multiple baking racks.

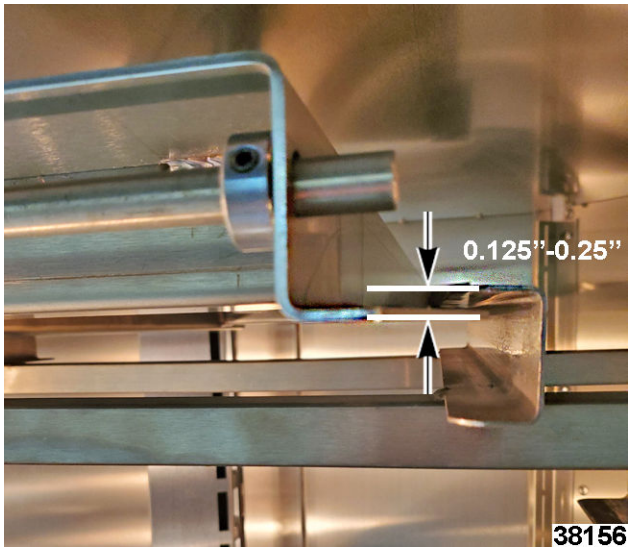

Fig. 82

A. Access rotate/lift assembly at top of oven.

B. If carrier needs to be lower than snap ring will allow, access clevis pins and lower location to correct carrier height.

NOTE: Always lower or raise left and right clevis pins (2, Fig. 83) the same distance. One hole location (1, Fig. 83) equals 1/4" adjustment.

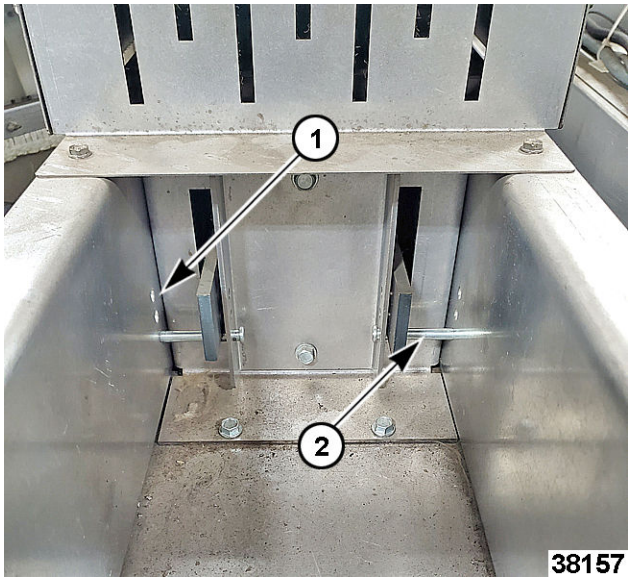

Fig. 83

6. If carrier needs to be adjusted to get proper spacing, remove rack and add shims between snap ring and carrier as shown. Ten shims are provided with each oven.

NOTE: Check multiple racks.

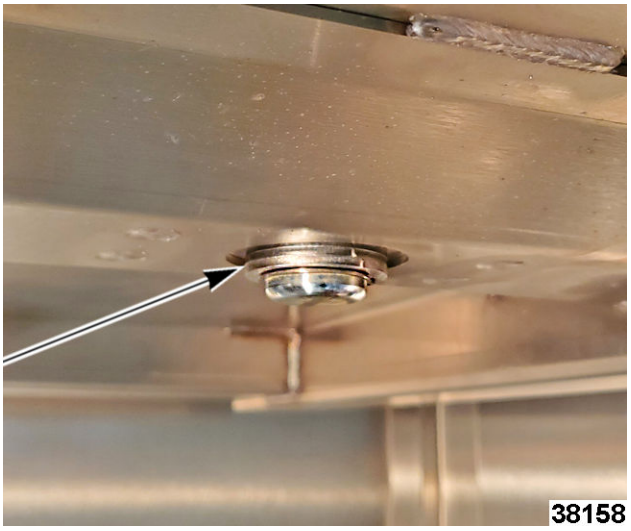

Fig. 84

7. Snug the set screws to hold the carrier in place.

HOOD ASSEMBLY

NOTE: After hood is installed, door assembly cannot be lifted off hinge pins. The door assembly would have to be removed and installed from the door hinges.

1. From inside hood, remove #10-32 screws securing both inner baffle panels (Fig. 85) to hood, then set aside baffles and other loose parts packaged inside hood.

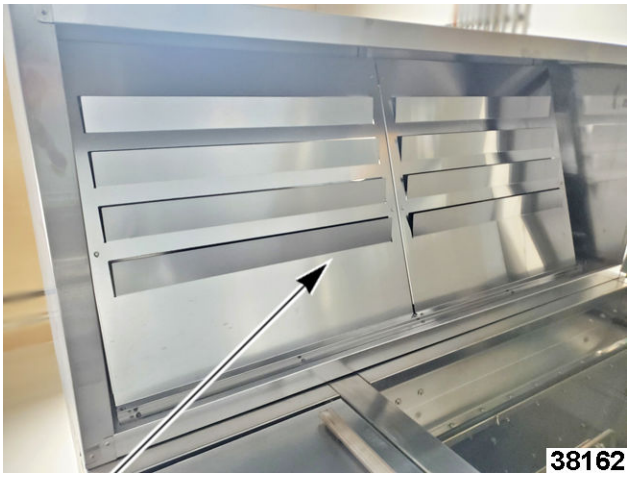

Fig. 85

2. Place hood on floor in front of oven with duct collar facing up. Remove only the necessary protective plastic from the hood.

NOTE: Use care to not slide or scrape hood on floor.

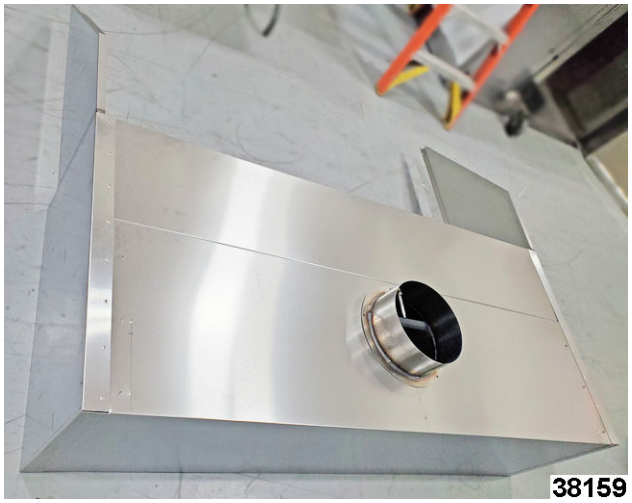

Fig. 86

3. Attach side panels to hood with 10-32 screws (1, Fig. 87) into 8 screw holes on back of hood. Align top of hood with top edge of side trim panels (2, Fig. 87) before tightening screws.

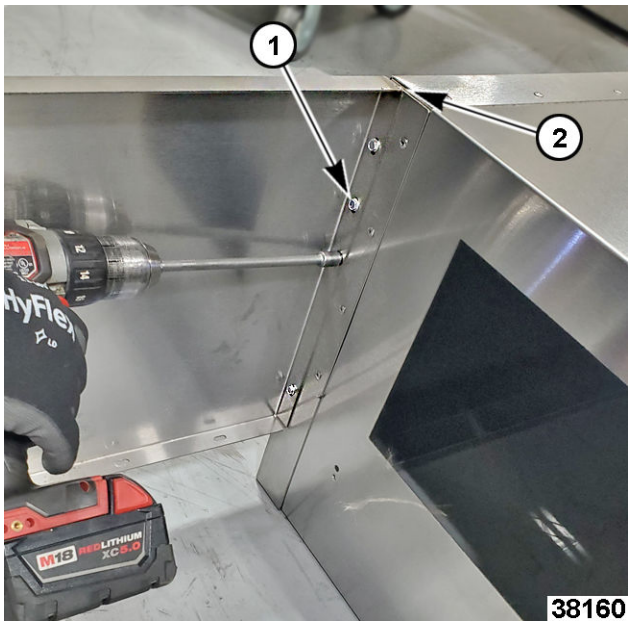

Fig. 87

4. Use pilot holes located on top of left and right door jambs to align hood mounting bracket (Fig. 88) so its face is flush across front of oven.



Fig. 88

5. Install hood mounting bracket onto top front edge of oven with 5 drill tip screws (Fig. 89), ensuring bracket remains flush with oven face.

NOTE: Screws must be installed into all five mounting bracket holes.

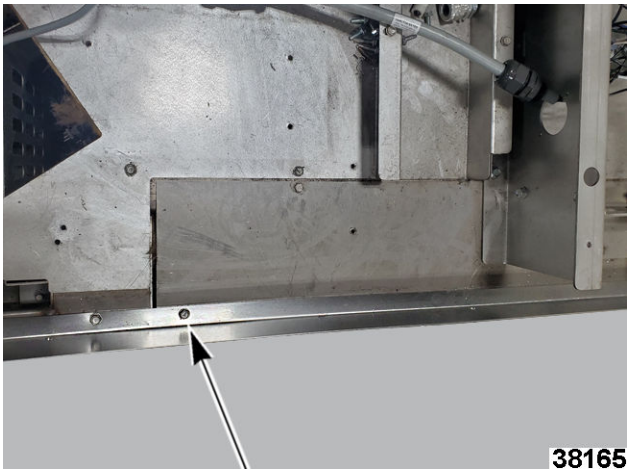

Fig. 89

6. Set hood in place on top of oven.
7. Secure hood side trim panels with three #10 Tek screws into top of oven (3 on each side).
8. Verify back side of hood is flush against front face of oven (Fig. 90). If not flush, loosen - but do not remove - side trim screws installed in Step 7., readjust hood and re-tighten screws.



Fig. 90

NOTE: If installing two ovens in same location, proceed with Step 9.. If installing only one oven, proceed to Step 10..

9. After both ovens have been installed through Step 8., check to see whether hood height is same for both hoods.
   A. If hood heights match, proceed to Step 10..
   B. If hood heights are not the same, hood trim screws installed in Step 3. may be loosened and the height adjusted.

NOTE: Adjusting hood height will cause top of hood and hood trim to be out of alignment. Consult with customer to determine alignment preference.

10. Install trim-to-hood bracket between top of hood and hood side trim using 2 drill tip screws (one bracket on each side of hood).
11. Inside hood, align baffle mounting bracket (Fig. 91) with holes in back wall of hood. Secure bracket with 5 drill tip screws.

NOTE: Screws are meant to pass through holes in back wall, and drill into hood mounting bracket install in Step 5..

NOTE: Hood height adjustments **CANNOT** be made after this step.



Fig. 91

12. Apply high temp red silicone to fiberglass tape on face of over pressure duct (Fig. 92).

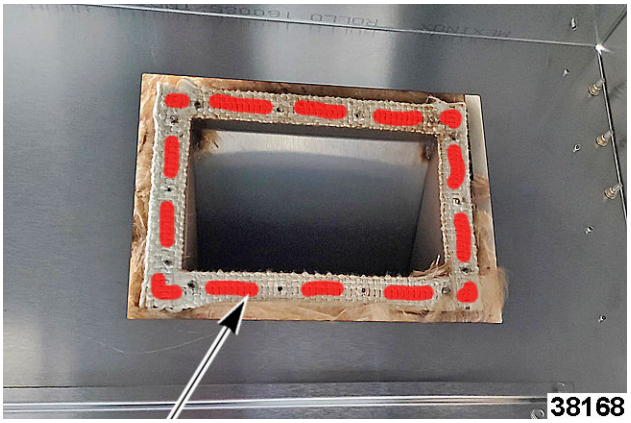

Fig. 92

13. Apply high temp red silicone to fiberglass tapes on back side of over pressure vent mounting plate.
14. Connect over pressure vent mounting plate to over pressure duct only at corners of plate opening (Fig. 93) with 8 drill tip screws.

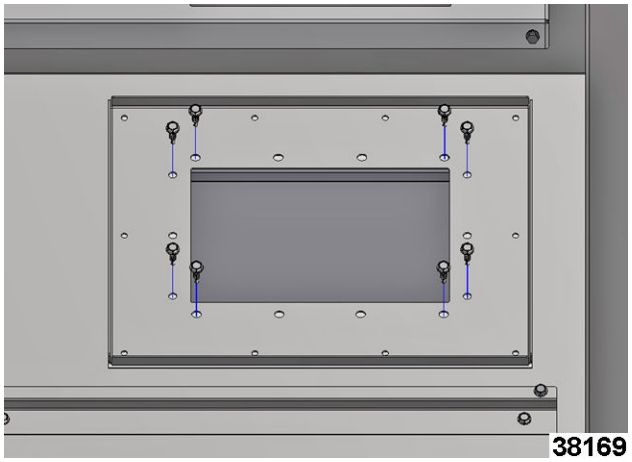

Fig. 93

15. Connect over pressure vent mounting plate to back wall of hood only at holes around perimeter of plate (Fig. 94) with 10 drill tip screws.

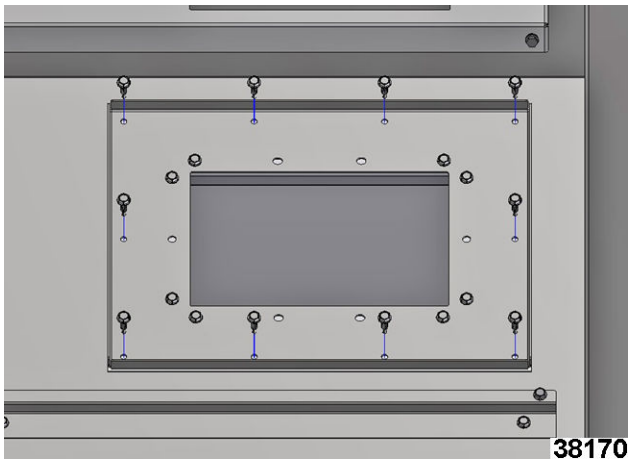

Fig. 94

16. Install over pressure damper to over pressure vent:
    A. Install lower body section of over pressure vent damper with 4 drill tip screws.
    B. Disassemble over pressure vent lid from over pressure top bracket.
    C. Install over pressure top bracket with 2 drill tip screws.
    D. Reassemble over pressure vent lid to over pressure vent top bracket.

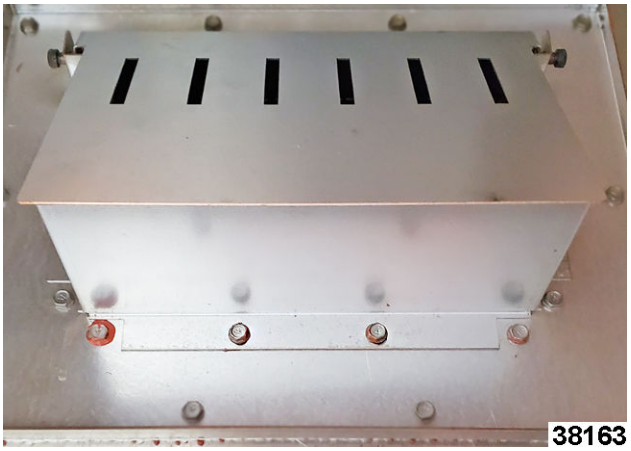

Fig. 95

17. Caulk seams at hood and side panels, as well as bottom edge seam of hood along oven front with gray silicone (Fig. 96).



Fig. 96

18. Customer is responsible for having a flue pipe connected to the center hood connection. See appropriate oven specification.

HOOD VENTING (GAS ONLY)

1. Insert exhaust duct through top left opening in back wall, inside hood (Fig. 97).

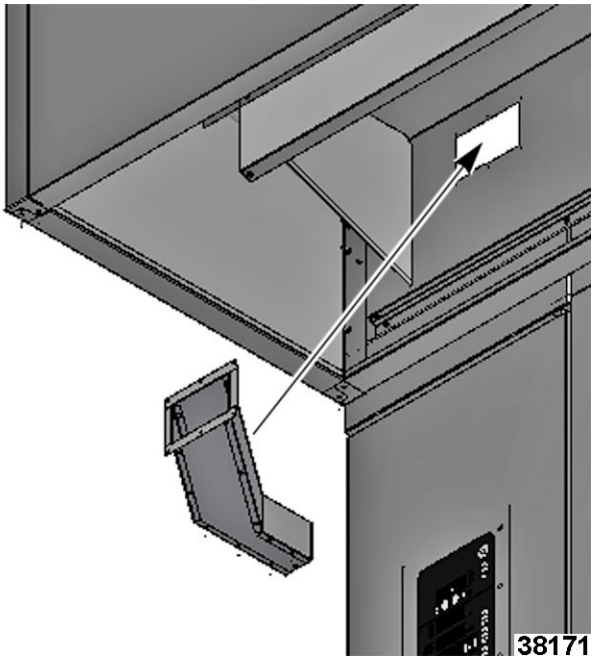

Fig. 97

2. Connect exhaust duct to back wall from inside hood using 6 drill tip screws (Fig. 98).

NOTE: Use pilot holes underneath fiberglass tape around exhaust duct opening for proper placement and sealing of duct.

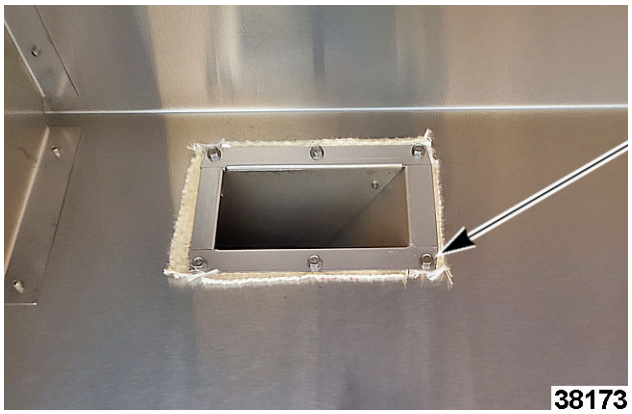

Fig. 98

3. Connect exhaust duct (1, Fig. 99) to draft inducer (2, Fig. 99) using one drill tip screw (3,Fig. 99).

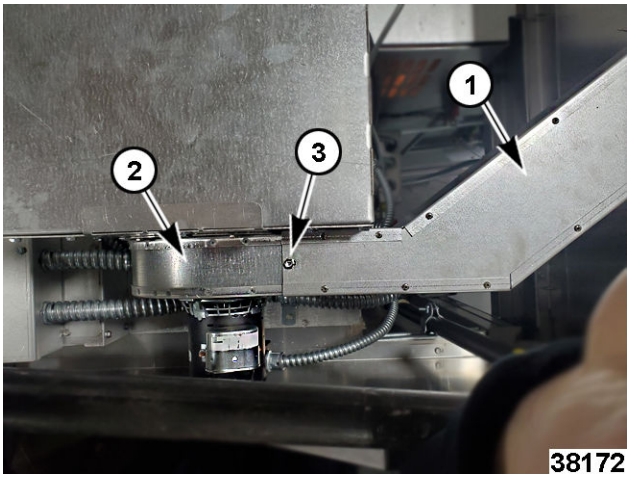

Fig. 99

4. Connect hood exhaust tube to hood exhaust pressure switch (Fig. 100) located behind gas valve inside control compartment.

NOTE: Leave tubing coiled in control compartment.



Fig. 100

NOTE: Defer connecting hood exhaust tubing (from pressure switch) to hood exhaust connection until startup.

HOOD AIR BAFFLES

NOTE: The following procedure requires a ladder.

1. Reinstall inner baffles removed in Step 1 of HOOD ASSEMBLY.
   A. Lift panel into hood cavity and place bottom edge (with threaded inserts) behind bottom mounting bracket (1, Fig. 101).
   B. Pivot panel up toward top mounting bracket.
   C. Install four 3/4" flat tipped screws (3, Fig. 101) by hand into panel at top mounting bracket locations.
   D. Install two 1/2" flat tipped screws (2, Fig. 101) by hand into panel at bottom mounting bracket.
   E. Tighten screws in bottom bracket BEFORE tightening screws in top bracket locations.
   F. Repeat steps Step A. through Step E. for second baffle.

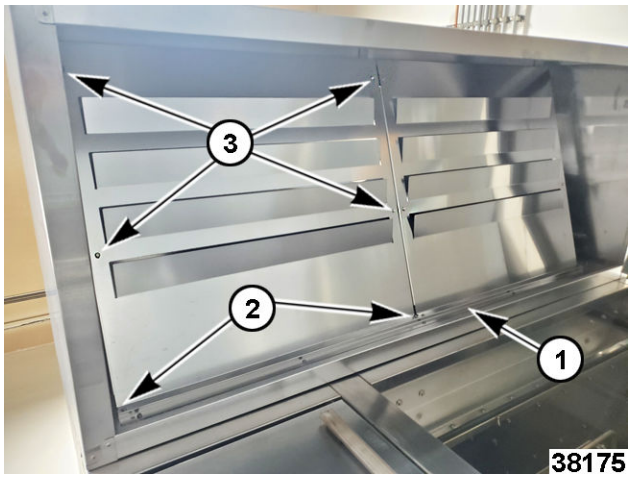

Fig. 101

CAULK OVEN

1. Caulk around oven with gray NSF Listed silicone.



Fig. 102

INITIAL START-UP



⚠ WARNING

Disconnect the electrical power to the machine and follow lockout / tagout procedures. There may be multiple circuits. Be sure all circuits are disconnected.

NOTE: Remove all protective plastic sheeting from oven surfaces and wipe down to remove all fingerprints, prior to heating oven.

NOTE: All utility connections by others.

Power and Plumbing Connections

- Verify the following:
  - Gas supply line shut-off valve is in the OFF position.
  - Gas supplied matches data plate and gas valve on oven.
  - Gas valve is in the OFF position.
  - Electrical connections have been made by electrician. 120V control, high voltage, and powered roof ventilator (external device).

NOTE: Refer to the service entrance label on the oven for electrical connections.

  - Turn the 120V supply power ON.
  - Turn the circuit breakers ON.
  - Drain connected (with air gap) by plumber and opposite end of drain plugged.
  - Water line is connected by plumber to flow restrictor located on top left rear corner of oven.
  - Water shut off is installed in supply line.

NOTE: If a water filtration unit is installed in supply line, verify that a filter cartridge is installed in unit (performed by customer).

NOTE: Refer to oven installation checklist and complete during initial start-up.

Start-Up

1. Connect hood exhaust pressure switch tubing to hood exhaust connection (Fig. 103).

NOTE: Make sure that there is a point in the tubing that is higher than flue pipe connection before tubing is routed to the hood exhaust pressure switch. This will help prevent the tube from clogging.

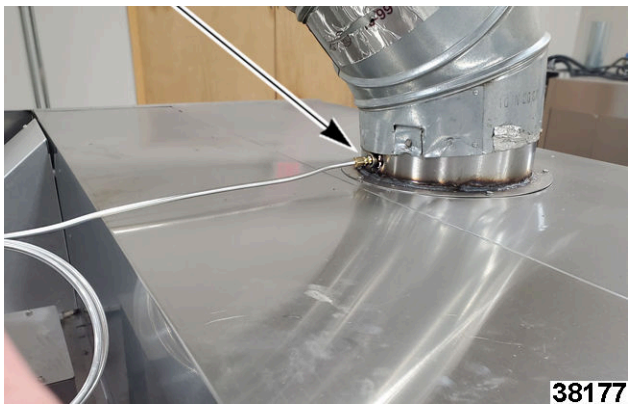

Fig. 103

2. Close oven door.
3. Turn oven power ON. Use DOWN ARROW keys to select lowest bake temperature so oven will not initiate a call for heat.
4. Verify operation of roof mounted ventilator.

NOTE: Verify hood baffle panels are installed.

   A. Remove vacuum line near hood exhaust pressure switch and connect incline manometer or equivalent.

      1) Venting Minimum reading should be 0.6" W.C.

   B. Disconnect manometer and reconnect vacuum line onto hood exhaust pressure switch.

5. Verify air louvers are set at factory settings.

NOTE: Factory louver settings located inside of control compartment door.

6. Verify that rack carrier height will accept racks when loading and no drag when rack is in the raised position.

NOTE: Racks expand when hot. There should be approximately 1/2" clearance from bottom of carrier to top of rack. Check at least two racks to verify rack acceptance into carrier.

7. Verify that rack is level and rotating properly when door is closed; and rack stops in the correct loading position when door is opened.
8. Verify that baking compartment circulation blower is turning in direction indicated on motor. If not, disconnect power and switch any two of the three phase lead wires.
9. Verify steam system operation.

   A. Set oven control to have 1 plus minutes on bake timer display.

   B. Set steam time for 20 seconds.

   C. Press START key to begin timer countdown.

      1) Water solenoid should energize.

   D. Press STOP key to silence beeper.

10. IGNITION SEQUENCE TIMING DIAGRAM.

NOTE: Ignition module will make three attempts to light burner before locking out.

   A. Ensure gas valve is in the off position to test ignition sequence check.

   B. Set oven to call for heat by pressing bake temperature display UP ARROW key, until HEAT ON LED illuminates.

   1st ATTEMPT:

   C. Draft inducer energized for 15 seconds pre-purge cycle.

   D. Spark igniter arcs indicating that it is energized.

   E. 2 seconds after igniter was energized, gas valve solenoid is energized.

   F. After igniter has been energized for 4 seconds, flame sensor will not have recognized a flame.

      1) Power is removed from igniter and gas valve.

   2nd ATTEMPT:

   G. 15 second inter-purge cycle.

   H. Spark igniter arcs indicating that it is energized.

   I. 2 seconds after igniter was energized, gas valve solenoid is energized.

   J. After igniter has been energized for 4 seconds, flame sensor will not have recognized a flame.

      1) Power is removed from igniter and gas valve.

3rd ATTEMPT:

K. 15 second inter-purge cycle.

L. Spark igniter arcs indicating that it is energized.

M. 2 seconds after igniter was energized, gas valve solenoid is energized.

N. After igniter has been energized for 4 seconds, flame sensor will not have recognized a flame.

1) Power is removed from igniter and gas valve.

O. After three tries for ignition and the burner has not lit, the draft inducer will shut off.

P. LED on ignition control will flash in a 3 flash sequence indicating a flame recognition failure and that the control is in lock-out mode.

Q. Opening the door for 5 seconds will reset ignition module.

R. This indicates the safety lock-out circuit is functioning properly.

11. Gas Pressure Adjustment.

A. Connect a manometer or equivalent to inlet and outlet pressure taps on gas valve.

B. Turn gas supply ON to oven and check for leaks between gas valve and supply line shut-off valve.

C. Verify that the static line pressure to the oven does not exceed 14" W.C. (1/2 psig, 35.6 cm W.C., 3.5 kPa).

NOTE: If static line pressure exceeds 14" W.C. (1/2 psig, 35.6 cm W.C., 3.5 kPa) the customer must supply and install a line pressure regulator to drop the pressure below 14" W.C., 35.6 cm W.C., 3.5 kPa.

D. Turn gas valve ON.

E. Set the oven to call for heat.

NOTE: It may take several ignition attempts to light burner initial time.

F. With oven burner flame established and with the burners lit for all other equipment that are common to supply line, check SUPPLY FLOW PRESSURE CHARTS.

G. With a burner flame established, adjust manifold pressure as indicated on the oven **data plate**.

NOTE: The table data plates are for reference only. If the manifold pressure must be adjusted to accommodate the installation altitude you must contact Bakery Product Support for a corrected data plate.

12. Initial heating of oven.

A. Press the VENT key to open baking chamber vent.

B. Leave loading door ajar approximately 2" to evacuate smoke and prevent tarnishing of oven interior, but not open far enough to prevent operation of oven.

C. Set the oven control baking temperature to 300°F (150°C) and bake timer for 30 minutes.

D. After time elapses, press STOP key to silence beeper.

E. Fully open loading door to verify that baking compartment circulation blower de-energizes.

F. Set the oven control baking temperature to 400°F (200°C). and bake timer for 30 minutes. Leave loading door ajar approximately 2".

G. After time elapses, silence the beeper and allow oven to heat for an additional 30 minutes with loading door closed.

13. Combustion analysis.

A. Allow oven to cool to 300°F (150°C).

B. Set oven temperature to 450°F (230°C) and with burner flame established, insert combustion analyzer meter into air sampling hole and take combustion measurements O2 and CO air free readings.

NOTE: Location of the air sampling hole will be on side of draft inducer assembly. Insert the probe at a 45° angle to get reading (Fig. 104).



Fig. 104

O2: (Range 4.5% to 6.5%)
CO Air Free: Not to exceed 0.04% (400 PPM)

1) If reading cannot be obtained, adjust the draft inducer baffle (Fig. 105) and retest for combustion.

NOTE: Depending on the unit, baffle locations may vary. If combustion readings still cannot be obtained, contact Bakery Product Support.



Fig. 105

14. Press VENT keypad on oven control to close baking chamber vent.
15. Steam test.
    A. With oven temperature at 450°F (230°C) set 20 seconds on steam timer, 1 minute on bake timer, and press START key to initiate steam test.
    B. Check for steam leakage around and under loading door. If leakage is present, adjust door catch and/or door sweep as required. On wide view window doors adjust the door hinges.
    C. After time has expired press STOP key to silence beeper.
    D. With loading door closed. Allow oven to heat for 20 minutes at 450°F (230°C).
    E. Set 20 seconds on steam timer, 1 minute on bake timer, and press START key to initiate steam test.
    F. After time has expired press STOP key to silence beeper.
16. Press VENT key to open baking chamber vent. Allow oven to vent for two minutes, then close vent.
17. Set oven control baking temperature below room ambient temperature and open loading door 6" to 10" to release vapors.
18. Cool-Down.
    A. Press COOL DOWN key.
    B. With loading door open, press VENT key to initiate oven cool-down.
    C. After oven has reached a safe cool-down temperature, stop automatic cool-down by closing loading door and/or turning the oven power OFF.

INITIAL START-UP INFORMATION MATERIAL

IGNITION SEQUENCE TIMING DIAGRAM

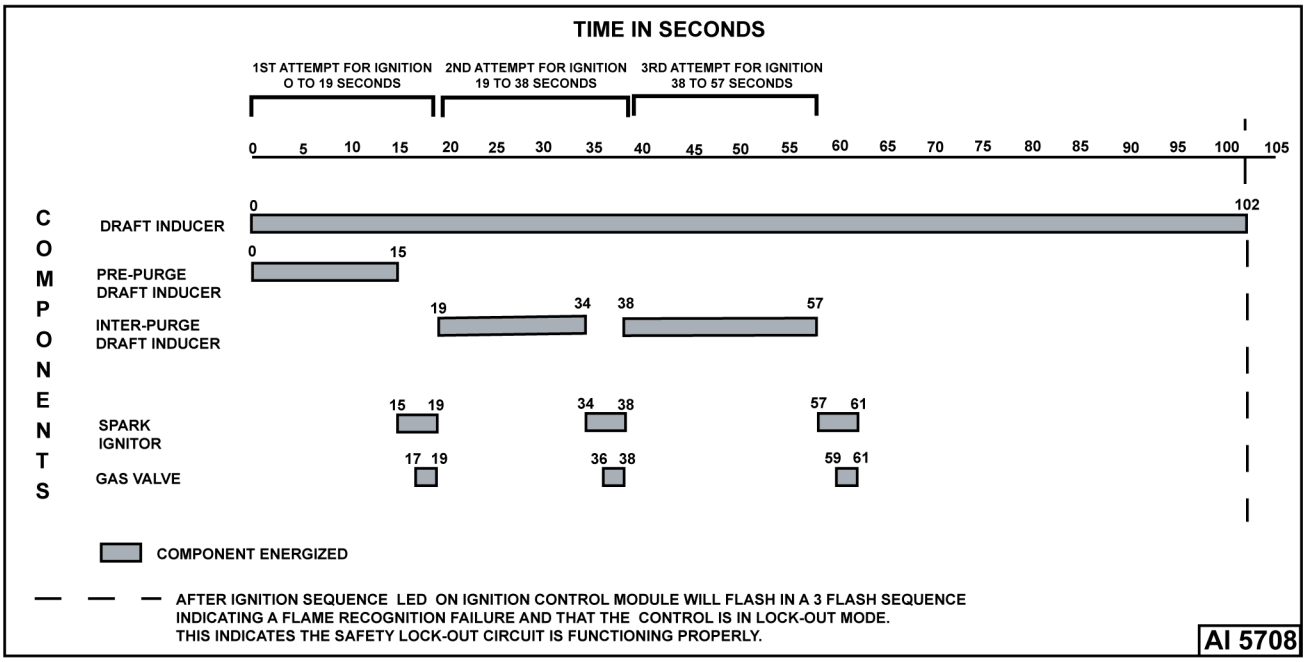

Fig. 106

SUPPLY FLOW PRESSURES CS500G1

	Natural Gas	Propane Gas
BTU/HR	180,000	180,000
W.C.	5.0 -14.0"	12.0 - 14.0"
kCAL/HR	45,400	45,400
cm W.C.	12.7 - 25.4	30.5 - 35.6
Mj/HR	190	190
kPa	1.25 - 2.50	3.00 - 3.50

SUPPLY FLOW PRESSURES CS500G2

	Natural Gas	Propane Gas
BTU/HR	275,000	275,000
W.C.	5.0-14.0"	10.0"- 14.0"
kCAL/HR	69,300	69,300
cm W.C.	12.7 - 35.6	30.5 - 35.6

SUPPLY FLOW PRESSURES CS500G2 (Continued)

	Natural Gas	Propane Gas
Mj/HR	290	290
kPa	1.25 - 3.50	2.50 - 3.50

ALTITUDE CORRECTION CHART

ELEVATION IN FT.	CS500G1		CS500G1		CS500G2		CS500G2	
	Natural Gas		Propane Gas		Natural Gas		Propane Gas	
	Orifice #53 Orifice Dia. 0.0595		Orifice #63 Orifice Dia. 0.037		Orifice #49 Orifice Dia. 0.073		Orifice #56 Orifice Dia. 0.046	
	Oven Rating BTU/Hr	Manifold Pressure "W.C.	Oven Rating BTU/Hr	Manifold Pressure "W.C.	Oven Rating BTU/Hr	Manifold Pressure "W.C.	Oven Rating BTU/Hr	Manifold Pressure "W.C.
0 (sea level)-2999	180,000	3.5	180,000	10.0	275,000	3.5	275,000	8.75
3000-3499	158,400	2.7	158,400	7.7	264,000	3.3	264,000	8.9
3500-3999	154,800	2.6	154,800	7.3	258,000	3.1	258,000	8.5
4000-4499	151,200	2.4	151,200	7.0	252,000	3.0	252,000	8.2
4500-4999	147,600	2.3	147,600	6.7	246,000	2.9	246,000	7.8
5000-5499	144,000	2.2	144,000	6.4	240,000	2.7	240,000	7.4
5500-5550	140,400	2.1	140,400	6.0	234,000	2.6	234,000	7.0

ORIFICE DIA. MUST CHANGE 5551 FT. ABOVE SEA LEVEL

ELEVATION IN FT.	CS500G1		CS500G1		CS500G2		CS500G2	
	Natural Gas		Propane Gas		Natural Gas		Propane Gas	
	Orifice #55 Orifice Dia. 0.052		Orifice #66 Orifice Dia. 0.033		Orifice #52 Orifice Dia. 0.0635		Orifice #60 Orifice Dia. 0.04	
	Oven Rating BTU/Hr	Manifold Pressure "W.C.	Oven Rating BTU/Hr	Manifold Pressure "W.C.	Oven Rating BTU/Hr	Manifold Pressure "W.C.	Oven Rating BTU/Hr	Manifold Pressure "W.C.

ORIFICE DIA. MUST CHANGE 5551 FT. ABOVE SEA LEVEL (Continued)

ELEVATION IN FT.	CS500G1		CS500G1		CS500G2		CS500G2	
	Natural Gas		Propane Gas		Natural Gas		Propane Gas	
	Orifice #55 Orifice Dia. 0.052		Orifice #66 Orifice Dia. 0.033		Orifice #52 Orifice Dia. 0.0635		Orifice #60 Orifice Dia. 0.04	
5551-6000	136,800	3.4	136,800	9.1	228,000	4.3	228,000	11.7
6001-6500	133,200	3.2	133,200	8.6	222,000	4.1	222,000	11.1
6501-7000	129,600	3.1	129,600	8.1	216,000	3.8	216,000	10.5
7001-7500	126,000	2.9	126,000	7.7	210,000	3.6	210,000	9.9
7501-8000	122,400	2.7	122,400	7.3	204,000	3.4	204,000	9.3
8001-8500	118,800	2.6	118,800	6.8	198,000	3.2	198,000	8.8
8501-9000	115,200	2.4	115,200	6.4	192,000	3.0	192,000	8.3
9001-9500	111,600	2.3	111,600	6.0	186,000	2.8	186,000	7.8
9501-10,000	108,000	2.1	108,000	5.7	180,000	2.7	180,000	7.3

FINAL CHECKS

1. Complete Startup Checklist.
2. Record start-up information on the label provided inside the control compartment door.

NOTE: Oven warranty will not be granted unless Startup Checklist has been completed and received by Hobart/Baxter.

HARDWARE REFERENCE GUIDE

Rack Oven Hardware Reference Guide

01-10I976-00002 RACK OVEN-HARDWARE IDENTIFIER

Photo	Part Number	Description	Photo	Part Number	Description
	01-1000V0-00080	BEARING, BRASS - DOOR HINGE		01-1000V4-00480	1/4-20 X 1.00 INCH LONG FLAT HEAD SCREW
	01-1000V0-00091	E-CLIP LOCK BAR (OV500/OV520 ONLY - NOT INCLUDED IN HARDWARE KIT)		01-1000V4-00481	1/4-20 X .75 INCH LONG FLAT HEAD SCREW
	01-1000V4-00058	5/16-18 X 1 INCH LONG, GIMLET SCREW		01-1000V4-00482	1/4-20 X .50 INCH LONG FLAT HEAD SCREW
	01-1000V4-00069	1/2-13 NUT		01-1000V4-00498	1/4-20 X .75 INCH LONG, PAN HEAD SCREW
	01-1000V4-00073	1/4-20 ANCHOR (MILD STEEL)		01-1000V4-00499	1/4-20 X .75 INCH LONG, FLAT HEAD SCREW
	01-1000V4-00161	3/8-16 SET SCREW (CARRIER)		01-1000V4-00503	PIVOT SCREW (1/4-20) (NOT INCLUDED IN HARDWARE KIT)
	01-1000V4-00199	3/8-24 SET SCREW (ROTATON)		01-1000V4-00531	3/8-16 LOCK BAR SCREW, (OV500/OV520 ONLY - NOT INCLUDED IN HARDWARE KIT)
	01-1000V4-00264	1/2" LOCK WASHER		01-1000V4-00542	#8 PHIPS (ROTATION CAPACITOR)
	01-1000V4-00283	1/4-20 X .75 INCH LONG, HEX HEAD WIDE SERRATED FLANGE SCREW		01-100V18-00078	#7 DRILL BIT (1/4-20 TAP)
	01-1000V4-00284	10-32 X .75 INCH LONG SCREWS		01-100V18-0128E	#20 DRILL BIT (10-32 TAP)
	01-1000V4-00364	3/8-16 LOCK BAR WASHER (OV500/OV520 ONLY - NOT INCLUDED IN HARDWARE KIT)		01-100V18-0129A	10-32 TAP
	01-1000V4-00385	# 10 TEK SCREW		01-100V18-0129D	1/4-20 TAP
	01-1000V4-00387	1/4-20 X 0.50 INCH SCREW (OV500/OV520 HOOD ONLY)		01-1M2372-00001	CENTER FLOOR WASHER (SINGLE RACK ONLY)
	01-1000V4-00400	10-32 X .75 INCH LONG, GIMLET POINT SCREW		01-1M6101-00114	TUBE LOCK BAR, (OV500/OV520 ONLY - NOT INCLUDED IN HARDWARE KIT)
	01-1000V4-00465	1/2-13 X 1-1/2 INCH LONG BOLT		01-1M6101-00115	DOOR HANDLE PIVOT PIN, (OV500/OV520 ONLY - NOT INCLUDED IN HARDWARE KIT)
	01-1000V4-00479	1/4-20 X .75 INCH LONG, HEX HEAD THREAD CUTTING SCREW		01-1M6108-00110	ARM LOCK BAR PIVOT, (OV500/OV520 ONLY - NOT INCLUDED IN HARDWARE KIT)
	01-1000V4-00386	#10-32 X .50 INCH LONG, HEX HEAD W/ STARLOCK WASHER SCREW (CS500 HOOD ONLY)			