BUTCHER BOY®

MIXER GRINDERS

500/56, 500/56F, 500/66S

500/66S SHOWN

MADE IN USA

"BUTCHER BOY"

QUALITY

DEPENDABILITY

SERVICE

INSTALLATION PROCEDURE

1. It is important to remove the feed screw from the bowl before beginning electrical work.
2. An industrial electrician should do all electrical installation. Do not change wiring in electrical enclosures. Make connections and changes at terminals on disconnect switch only.
3. When connections are complete, look into bowl and check rotation of drive chuck. Chuck should rotate counter-clockwise.

SET UP PROCEDURE FOR MIXER GRINDERS

After machine has been properly installed and is ready to process product, use the following information to configure your **BUTCHER BOY** mixer grinder for your specific product.

BE SURE TO READ AND UNDERSTAND ALL THE INFORMATION REGARDING THIS EQUIPMENT PRIOR TO RUNNING THE EQUIPMENT. FOLLOW ALL SAFETY RULES WHEN THE EQUIPMENT IS ENERGIZED.

ONLY AUTHORIZED PERSONS SHOULD WORK ON OR MAKE ADJUSTMENTS TO THIS EQUIPMENT.

The control panel has 5 switches. (fig. 1)

The **MIX START** turns on the paddle(s) and conveyor.
The **MIX STOP** switch stops the machine, if in mix cycle the switch stops the mixing, if you have started to grind, both the grind and the mix will stop. The MIX STOP switch has a feature, which keeps the button, once depressed, in the stop position. The button must be released by turning or pulling to allow any machine operation.
GRIND START will energize only if the MIX START is started first.
GRIND STOP shuts down the GRIND only.
JOG/RUN selector switch must be in RUN for MIX START to be energized. JOG is to jog paddle(s) (in reverse). This action will help dislodge any product behind the paddle(s) and aid placing the paddle(s) into paddle removal position, works in a one shot manner (when button is pressed motor will run for short timed duration).
Open the control panel with a screwdriver by turning the slot 1/4 turn counterclockwise. Open the door, inside you will find (fig 2):

CONVEYOR REVERSE timer **TR1.**

MIXER PADDLE timer **TR2.**

JOG relay **TR3.**

Two control relays.

Terminal strip.

The only voltage in the control panel is 24 VAC, this allows fine tuning of the controls while power is applied to the machine.

Start the mix cycle by depressing MIX START. Observe the mixer paddle(s) rotating continuously while the conveyor runs intermittently towards the rear of the hopper. The mixer speed is fixed; the conveyor rest time is adjustable separately from the adjustable run time.Place the product in the hopper. The conveyor should run long enough to move all the product in the conveyor into the mixing paddles but not so long that the product is overworked. The off time controls the frequency of the cycle i.e. the conveyor runs for 10 seconds and is off for 24 seconds. The relay **TR1** would be set as follows:

Top dial set at 1. with time range set at 10s.

Bottom dial set at .8 with range set at 30s.

When the GRIND START is depressed the grinder runs continuously, the conveyor runs continuously toward the grinder head and the mixer paddle(s) runs intermittently.
The mixer paddle(s) needs to run just enough to keep the conveyor full but not to overwork the product. Adjust **TR2** for mixer paddle(s) on-off timing the same as you adjusted TR1.

CONVEYOR SPEED: this is the most important adjustment and unfortunately after you make this adjustment you need to go back and check all the previous settings. You may continue "fine tuning" the process until you are satisfied with the results.

After the product begins to discharge from the plate, stop the machine, remove the end cover of the feed box and observe the "pack" of the product in the feed box. Too much packing with product being purged back into the hopper indicates too much conveyor speed; voids in the pack indicate not enough conveyor speed.

Speed is changed with a crank handle, accessed by removing the bottom rear cover. Place the machine in the grind mode (the conveyor will run continuously)

and turn the crank to increase or decrease the conveyor speed as needed. **THE MOTOR MUST BE RUNNING WHILE PERFORMING THIS ADJUSTMENT. TIMER TR3** allows the jog button to work only as a one shot. This timer should not need adjusting.

After optimum settings have been obtained the information should be recorded along with product description to use when the same product is run again.

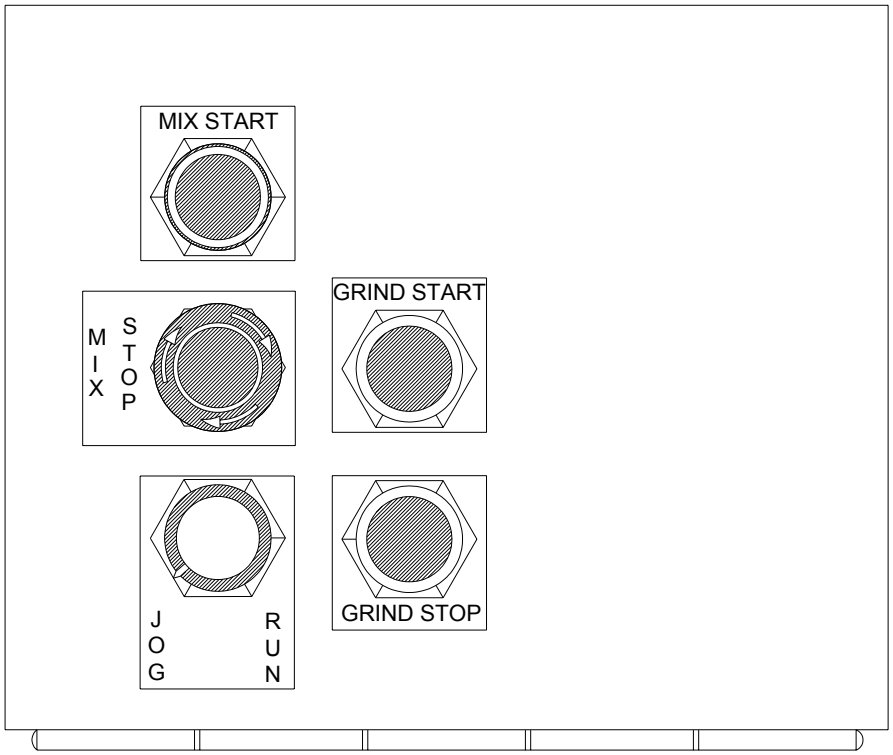

Fig. 1

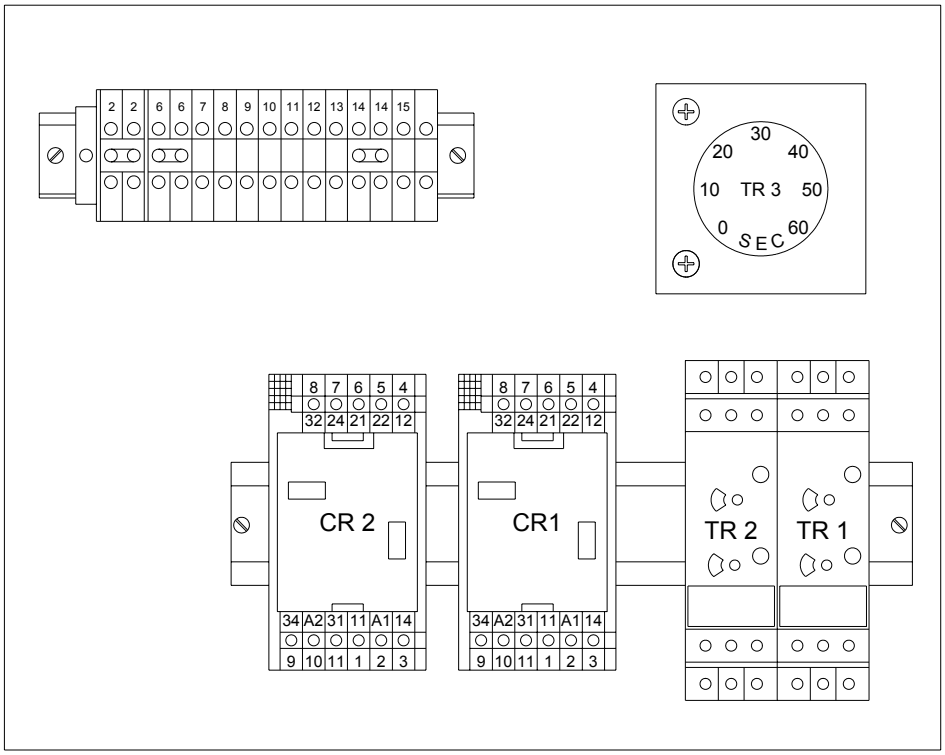

Fig. 2

BUTCHER BOY 56, 56F & 66S – S/S CUTTING GROUP

FOR SUPER 66			
ITEM	PART#	DESCRIPTION	QTY.
1	0061291S	SS BOWL & LOCKING PIN	1
2	DP-08-28	PLATE LOCKING PIN	1
3	0061289S	SS FEED SCR. & STUD ASSY	1
4	0061293	FEED SCR. STUD (66S)	1
5	0058245S	SS KNIFE & PL RING (66 SUPER)	1
6	0058249	66 RING WRENCH	1
7	0061355	SS SPURT GUARD ASSY	1

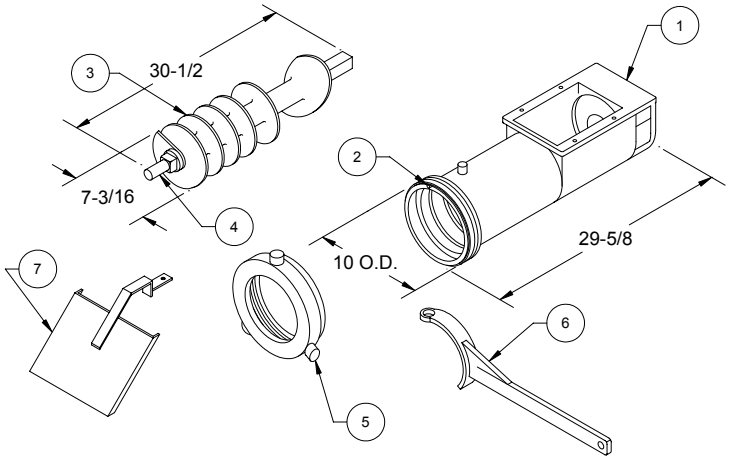

FOR FLARED 56F (56 BARREL FLARED TO A 66 PLATE)			
ITEM	PART#	DESCRIPTION	QTY.
1	0058247S	SS BOWL & LOCKING PIN (56F)	1
2	DP-08-28	PLATE LOCKING PIN	1
3	0058251S	SS FEED SCR. & STUD ASSY (56F)	1
4	0058248	FEED SCREW STUD (56F)	1
5	0058245S	SS KNIFE & PL RING (66 SUPER)	1
6	0058249	66 RING WRENCH	1
7	0061215	SS SPURT GUARD ASSY	1
8	0061220	SPURT GUARD HOLDER	1
9	0058218S	SS SPACER W/BUSHING	1
10	0058219	BUSHING SPACER RING	1

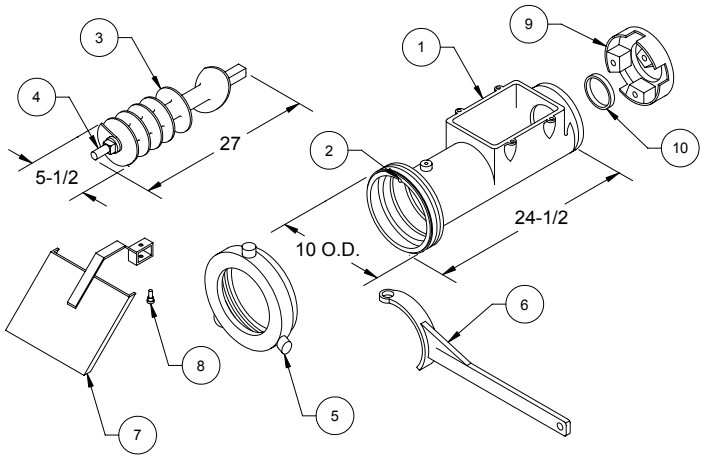

FOR 56 STD			
ITEM	PART#	DESCRIPTION	QTY.
1	0057100S	SS BOWL & LOCKING PIN (STD 56)	1
2	DP-06-24	PLATE LOCKING PIN	1
3	0057181S	SS FEED SCR. & STUD ASSY (STD 56)	1
4	0059144	FEED SCREW STUD (STD 56)	1
5	0059108S	SS KNIFE & PL RING (STD 56)	1
6	0059233	56 RING WRENCH	1
7	0059305	SS SPURT GUARD ASSY	1
8A	0059233	SS SPURT GUARD STUD	1
8B	0059224	SPURT GUARD HAND WHEEL	1
9	0058219	BUSHING SPACER RING	1
10	0058218S	SS SPACER RING W/BUSHING	1

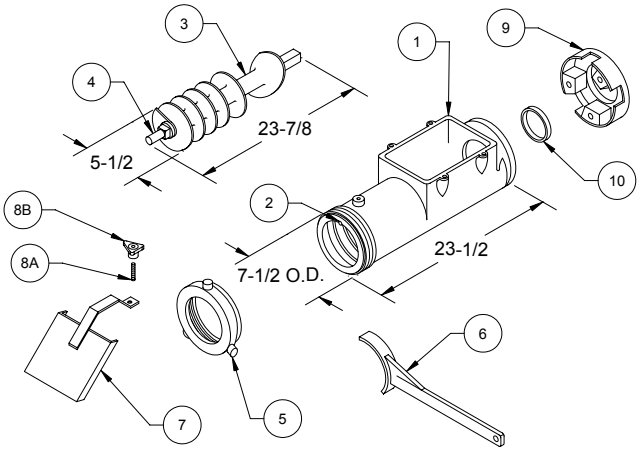

COMMON TO 500/56, 56F & 66S

PADDLES & CONVEYOR ASSY W/FEED BOX & COVER

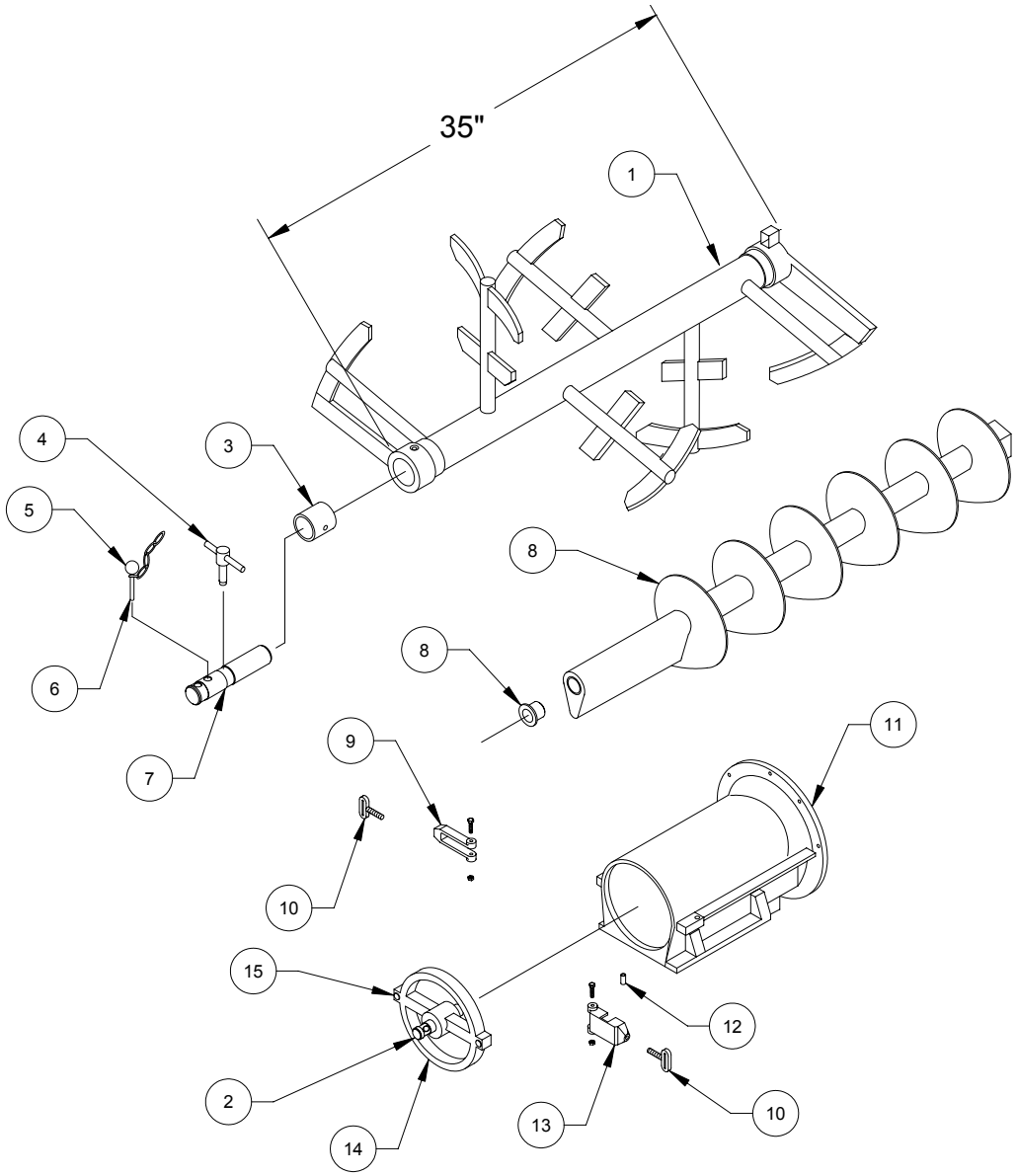

ITEM	PART#	DESCRIPTION	QTY.
1	0060344	PADDLE ASSY W/BUSHING (BALL DRIVE)	1
2	0060141	SHAFT	1
3	0060332	BUSHING PADDLES	1
4	0060255	T-BOLT ASSY	1
5	0090625	KNOB LOCKING PIN	1
6	0060063	LOCKING PIN & CHAIN ASSY	1
7	0060219	SHAFT-PADDLES	1
8	0060084	CONVEYOR SCREW ASSY W/BUSHING	1
9	0059148	SWING CLAMP ASSY-LH	1
10	0059158S	THUMB SCREW	2
11	0058220S	SS FEED BOX	1
12	0059149	BUSHING SWING CLAMP	2
13	0043560	SWING CLAMP ASSY-RH W/SAFETY	1
14	0058100S	SS CONVEYOR COVER ASSY W/SHAFT	1
15	0059193S	SS RIVET	2

500/56 MIXER GEAR BOX

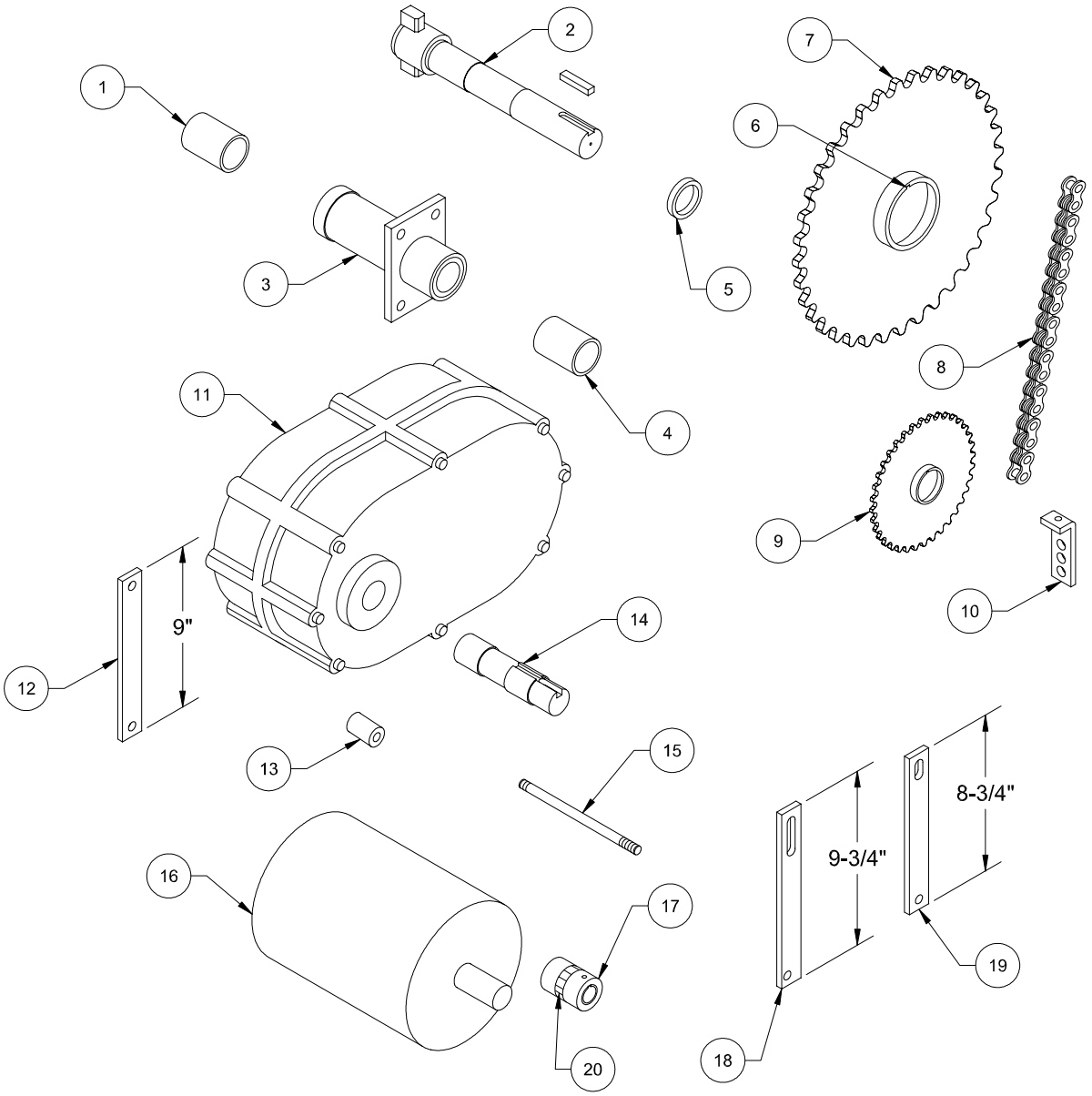

ITEM	PART#	DESCRIPTION	QTY.	ITEM	PART#	DESCRIPTION	QTY.
1	0090740	BUSHING-BEARING BRACKET	1	11	0095027A	REDUCER	1
2	0060405S	S/S DRIVE SHAFT ASSEMBLY	1	12	0060247	BRACE 9” LONG	1
3	0060203	BEARING BRACKET W/BUSHINGS	1	13	0060508	SPACER	1
4	0090740	BUSHING-BEARING BRACKET	1	14	0060509	RED. OUTPUT SHAFT	1
5	0060188	THRUST WASHER	1	15	0060222	STUD	4
6	0090160	HUB DRIVEN SPROCKET	1	16	0092191	5 HP MOTOR	1
7	0091044	DRIVEN SPROCKET	1	17	006223	COUPLING ASSY	1
8	0091132	CHAIN ASSY	1	18	0060249	BRACE 9-3/4” LONG	1
9	0060403	DRIVE SPROCKET	1	19	0060248	BRACE 8-3/4” LONG	1
10	0062059	CHECKER ANGLE	1	20	0095098	RUBBER SPIDER	1

CONVEYOR DRIVE 500 MIXER GRINDER

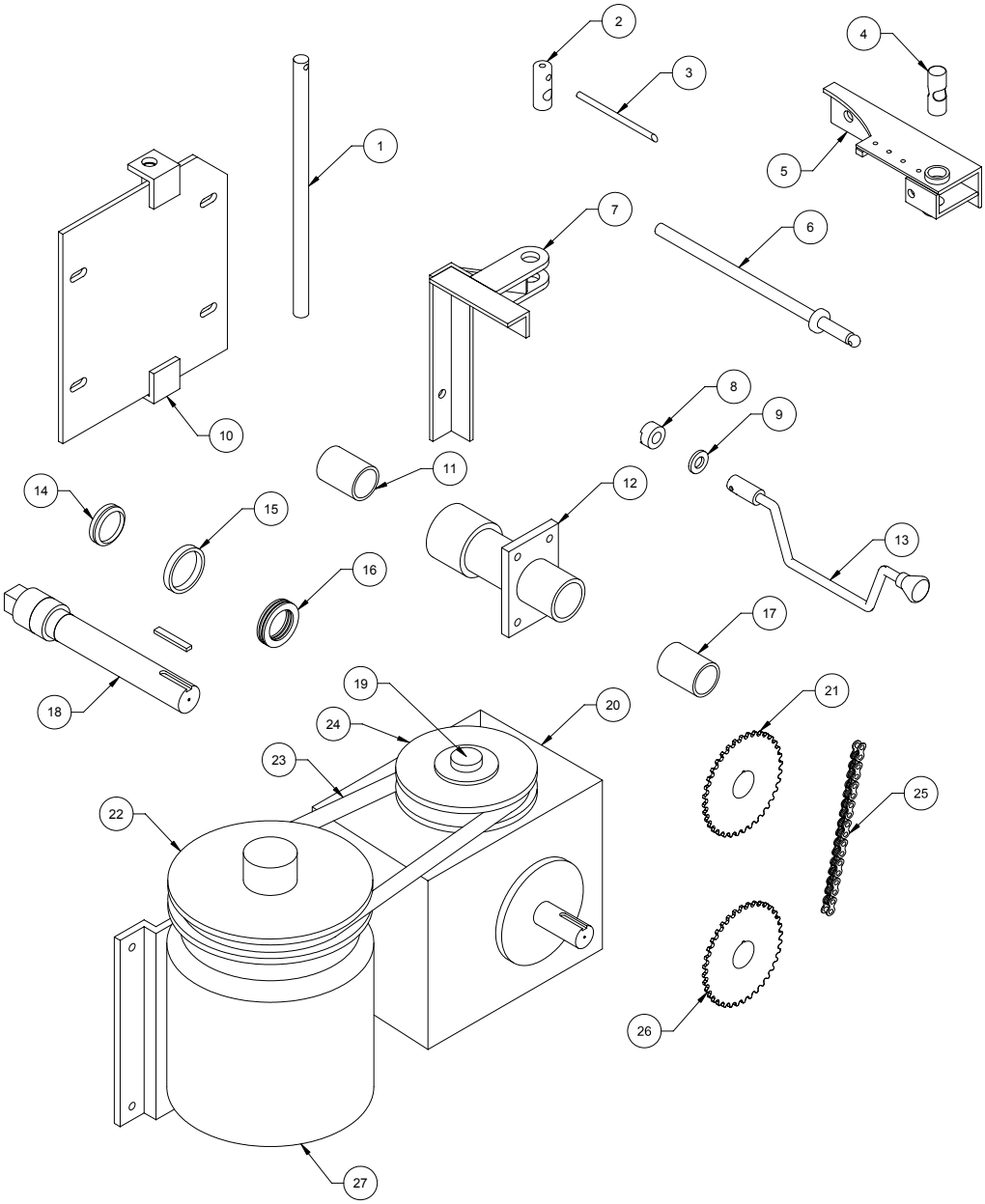

ITEM	PART#	DESCRIPTION	QTY.	ITEM	PART#	DESCRIPTION	QTY.
1	0060242S	MOTOR MOUNT PIN	1	15	0090432	SEAL	1
2	0060349S	SWIVEL GUIDE	1	16	0090325	THRUST BALL BEARING	1
3	0060348S	INDICATOR ROD	1	17	0090740	BUSHING	1
4	0060374S	SWIVEL UNIT	1	18	0060212S	DRIVE SHAFT	1
5	0060355S	INDICATOR BRACKET	1	19	0090199-146	HUB	1
6	0060361S	ADJUSTING SCREW	1	20	0095026	WORM REDUCER	1
7	0060350S	LEVER FORK	1	21	0091055	DRIVEN SPROCKET	1
8	0060364	BRONZE SPACER	1	22	0090195	VARI-SPEED PULLEY	1
9	0060369	WASHER SPACER	1	23	0090523	BELT	1
10	0060225S	MOTOR MOUNT BASE	1	24	0090196	SHEAVE	1
11	0090740	BUSHING	1	25	0091133	CHAIN ASSY	1
12	0060205S	BEARING BRK. W/BUSHING	1	26	0060322	DRIVE SPROCKET	1
13	0060365S	CRANK HANDLE	1	27	0092191	5 HP MOTOR	1
14	0090433	RING	1				

BUTCHER BOY 500 MIXER GRINDER

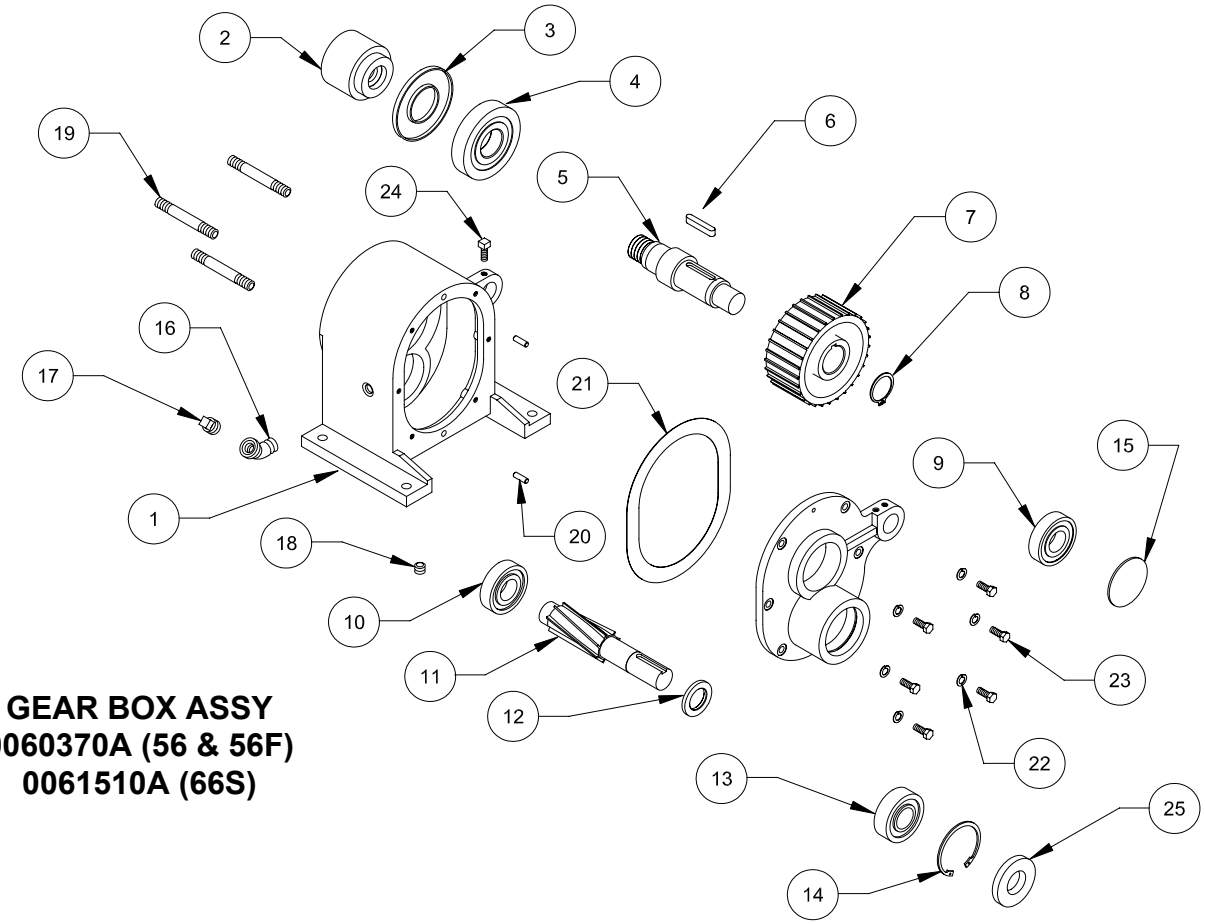

GEAR BOX ASSY
0060370A (56 & 56F)
0061510A (66S)

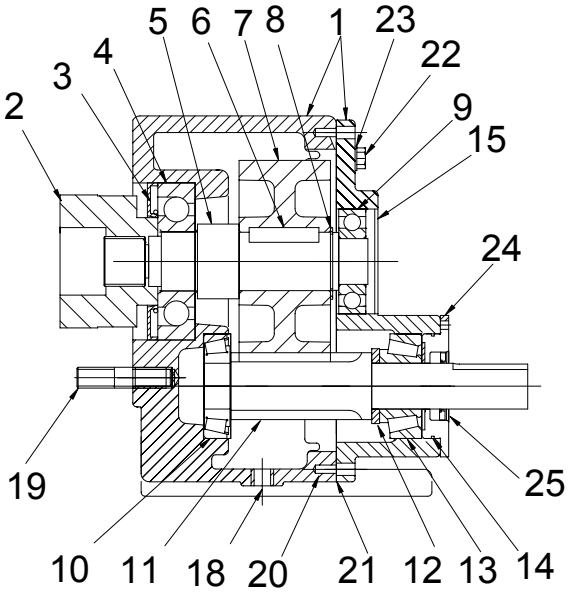

ITEM	PART#	DESCRIPTION	QTY.
1	0058240	GEAR HOUSING & LID ASSY	1
2	0058222	56 FEED SCREW CHUCK	1
	060303-CS	66 FEED SCREW CHUCK	1
3	0090407	SEAL	1
4	0090312	THRUST BEARING	1
5	0061511	SHAFT	1
6	0090607	KEY	1
7	000058025-J	GEAR WHEEL (SOLD WITH ITEM 12)	1
8	0090235	RETAINING RING	1
9	0090306	BALL BEARING	1
10	0058527	TAPER BEARING ASSEMBLY	1
11	0060132	PINION (SOLD WITH ITEM 7)	1
12	0060133	SPACER	1
13	0090340	TAPER ROLLER BEARING	1
14	0090482	O-RING	1
15	0060134	PLUG	1
16	0090624	1/2" X 45° STREET ELBOW	1
17	0090623	1/2" PIPE PLUG	1
18	0095159	3/8” CSK SOC PIPE PLUG	1
19	0058231	STUD (56 & 56F)	3
	0061508	STUD (SUPER 66)	3
20	DP-05-16-N	DOWEL PIN ∅5/16 X 1” LG	2
21	0059095	GASKET	1
22	SLW-06-N	LOCK WASHER	6
23	HHCS-23-20-N	HEX HD CAP SCREW	6
24	0058526	END CAP	1
25	0090481	SEAL	1

BUTCHER BOY 500 MIXER GRINDER

500/56, 56F & 66S MIXER GRINDER
MOTOR, PULLEYS & MISC.

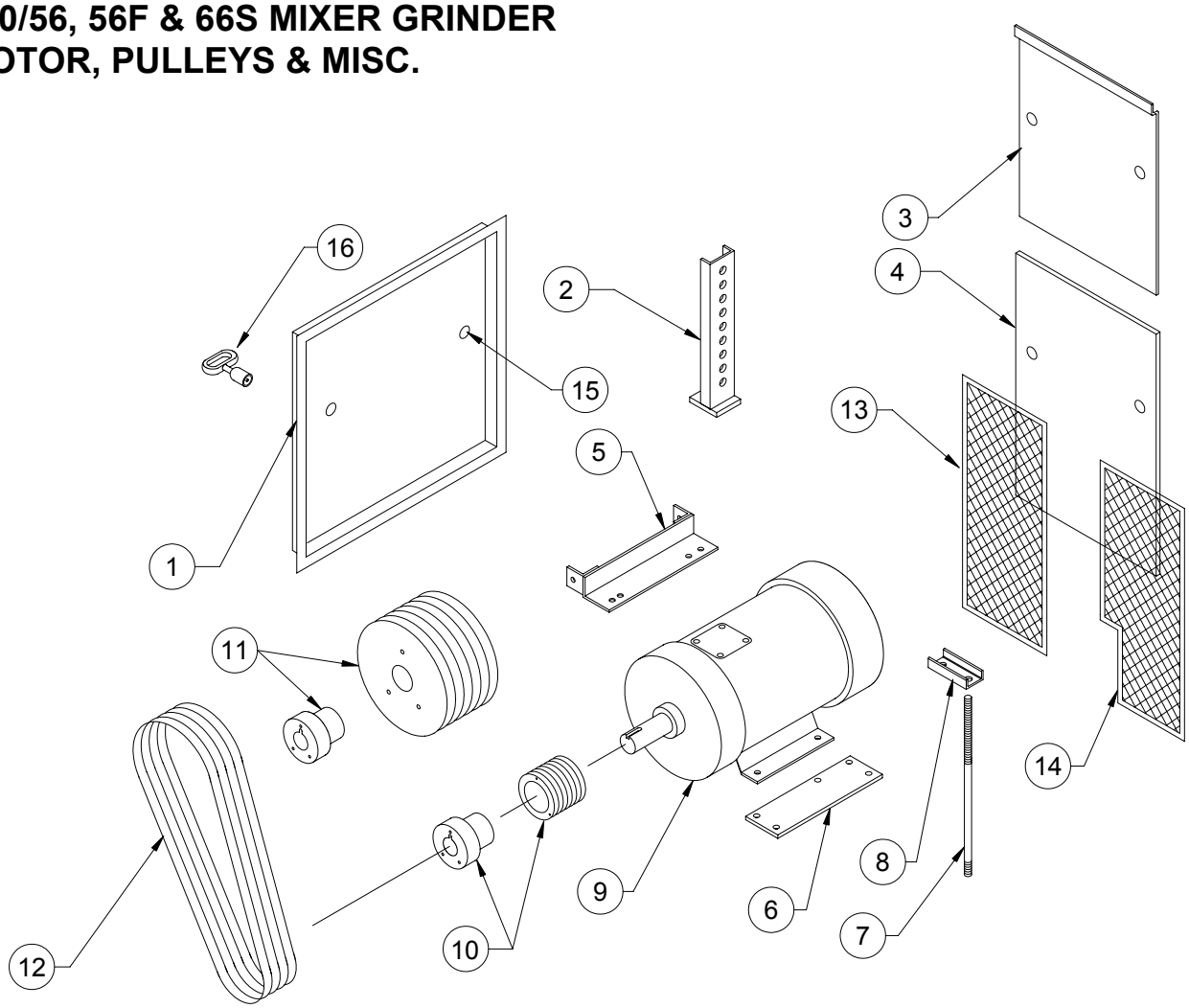

ITEM	PART#	DESCRIPTION	QTY
1	0060540	EXTENDED SIDE COVER	2
2	0030515	LEG	4
3	0060410	UPPER REAR COVER	1
4	0060411	LOWER REAR COVER	1
5	0062305S	MOTOR BASE ASSY 25 & 30HP	1
5	0060605S	MOTOR BASE ASSY 40HP	1
6	00623175	MOTOR PLATE 25 & 30HP	1
6	0060604S	MOTOR PLATE 40HP	1
7	0060139	BELT TENSION ROD ASSY	2
8	0060156	ROD EXTENSION	2
9	0092322	25HP MOTOR 200V 3PH ODP	1
9	0092345	30HP MOTOR 203-460V 3PH ODP	1
9	0092349	40HP MOTOR 230-460V 3PH ODP	1
10	0058406	MOTOR PULLEY & HUB STD 56 & 56F	1
10	0058407	MOTO PULLEY & HUB SUPPER 66	1
11	0058405	DRIVEN PULLEY & HUB	1
12	0090521	BELT	6
13	0060585	RH SAFETY SCREEN	1
14	0060586	LH SAFETY SCREEN	1
15	0095772	COVER LOCK	8
16	0060586	COVER KEY	1

BUTCHER BOY 500 MIXER GRINDER

ELECTRICAL COMPONENTS

THIS PAGE FOR USE BY QUALIFIED REPAIR TECHNICIANS ONLY

ITEM	PART#	DESCRIPTION	QTY.
1	0093999-069	GROUND TERMINAL	1
2	0093999-070	TERMINAL BLOCK	14
3	0093999-071	JUMPER	3
4	0093999-072	TERMINAL SPACER	2
5	0093999-034	TIMER-JOG	1
6	0093999-035	TIMER BLOCK	1
7A	0093999-038	TIMER-MIXER	1
7B	0093999-038	TIMER-CONVEYOR	
8	0093999-172	BASE-RELAY	2
9	0093999-173	RELAY	2
10	0093999-077	DIN RAIL	1
11	0060539	M0UNTING PLATE	1
12	0060550	CONTROL BOX ASSY	1
13	0093999-078	BUTTON ASM/MIX-START	1
14	009399-079	LAMP	1
15	0060571-1	PLATE-MIX START	1
16	0093999-080	BUTTON ASM/MIX STOP	1
17	0060571-4	PLATE-MIX STOP	1
18	0090999-031	BUTTON ASM/MIX-STOP	1
19	0060571-2	PLATE-GRIND START	1
20	0093999-081	BUTTON ASM/GRIND-STOP	1
21	0060571-3	PLATE-GRIND STOP	1
22	0093999-037	BLOCK-SWITCH	1
23	0093999-082	SWITCH ASM/JOG/RUN	1
24	0093999-083	CAP SWITCH	1
25	0060571-5	PLATE-JOG/RUN	1
26	009399-084	RAIL TERMINAL	1
27	0093999-187	END BLOCK	1
28	0093999-216	MOISTURE CAN	1
29	0093999-055	ACTUATOR	1
30	0093999-057	LOAD SWITCH	1
31	0093999-171	ENCLOSURE	1

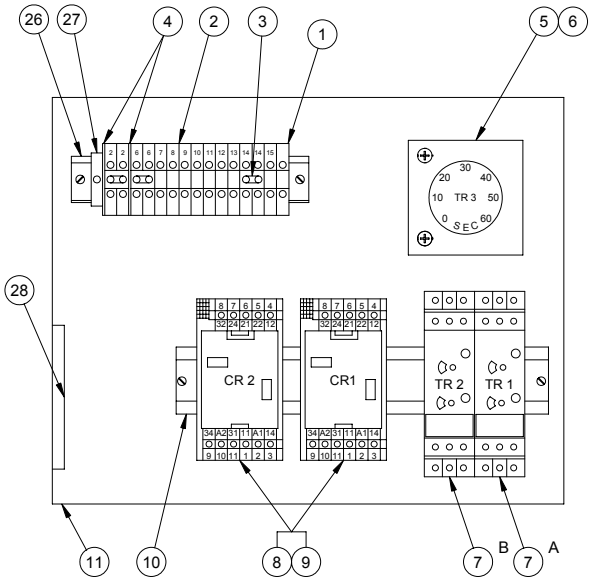

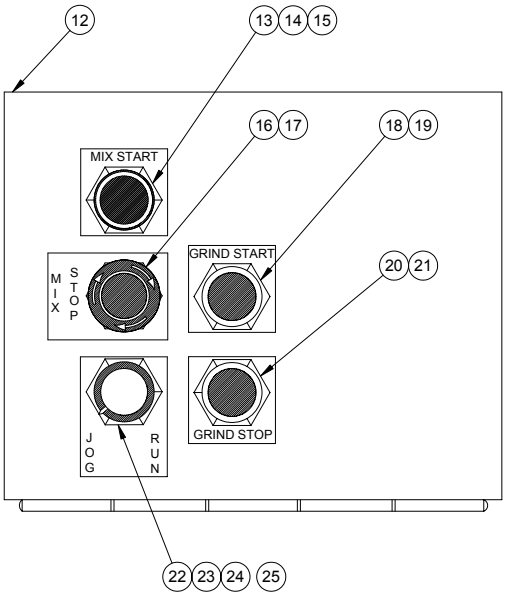

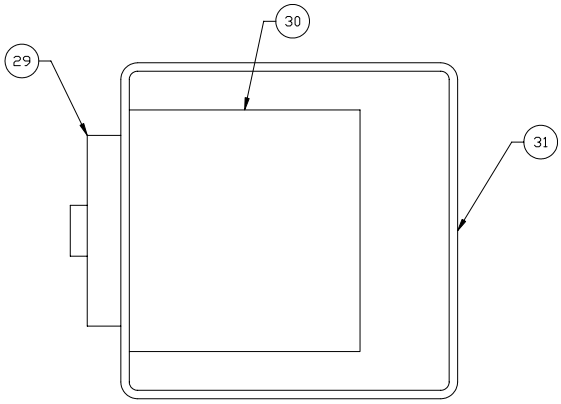

BUTCHER BOY 500 MIXER GRINDER

ELECTRICAL COMPONENTS

THIS PAGE FOR USE BY QUALIFIED REPAIR TECHNICIANS ONLY

CONTROL BOX OUTSIDE COVER

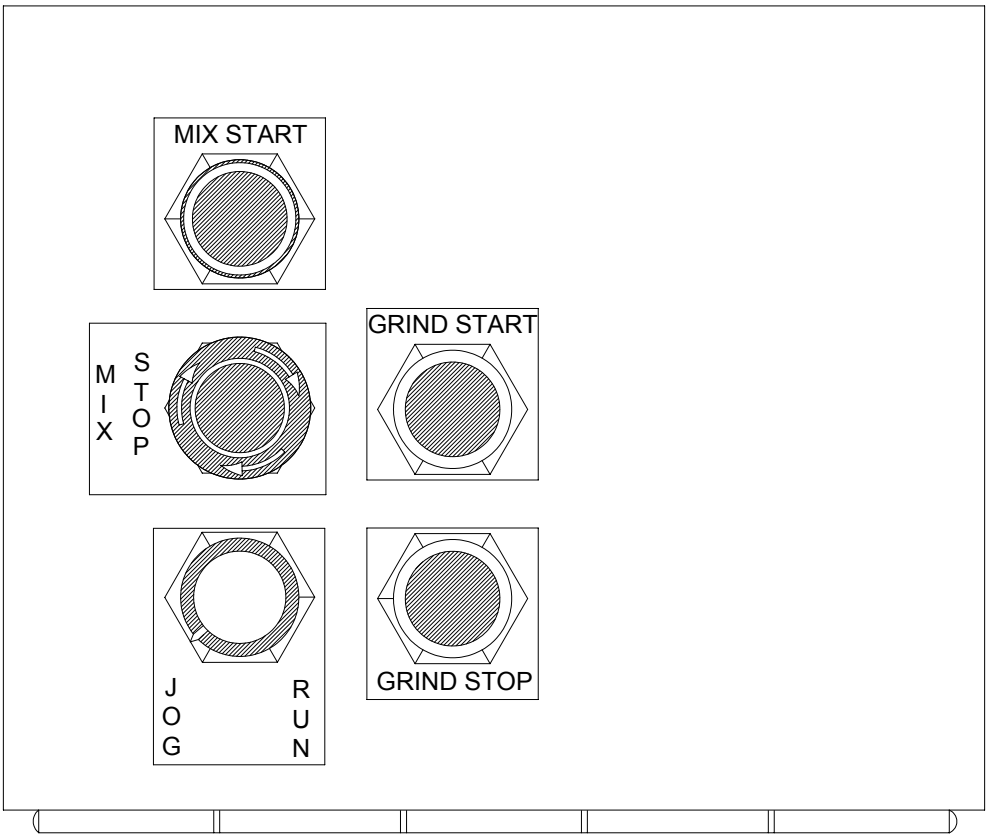

CONTROL BOX INSIDE COVER

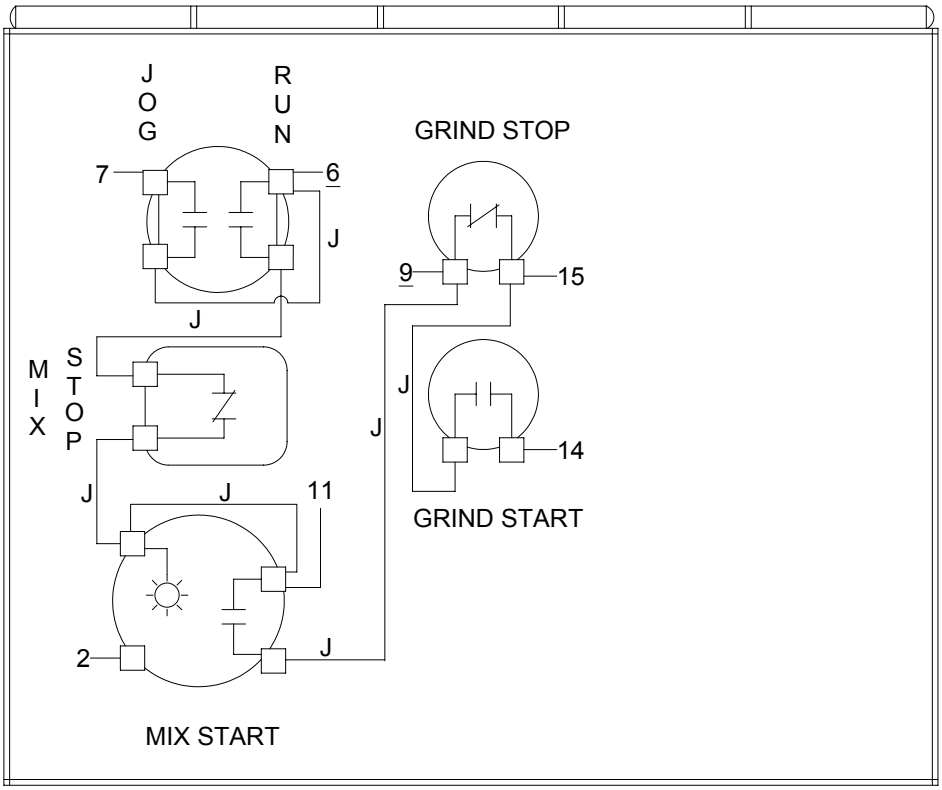

MG 24V CONTROL

BUTCHER BOY 500 MIXER GRINDER

ELECTRICAL SCHEMATICS

THIS PAGE FOR USE BY QUALIFIED REPAIR TECHNICIANS ONLY

MG_CONTR (CONTROL PANEL) MANUAL ADJUSTED CONVEYOR

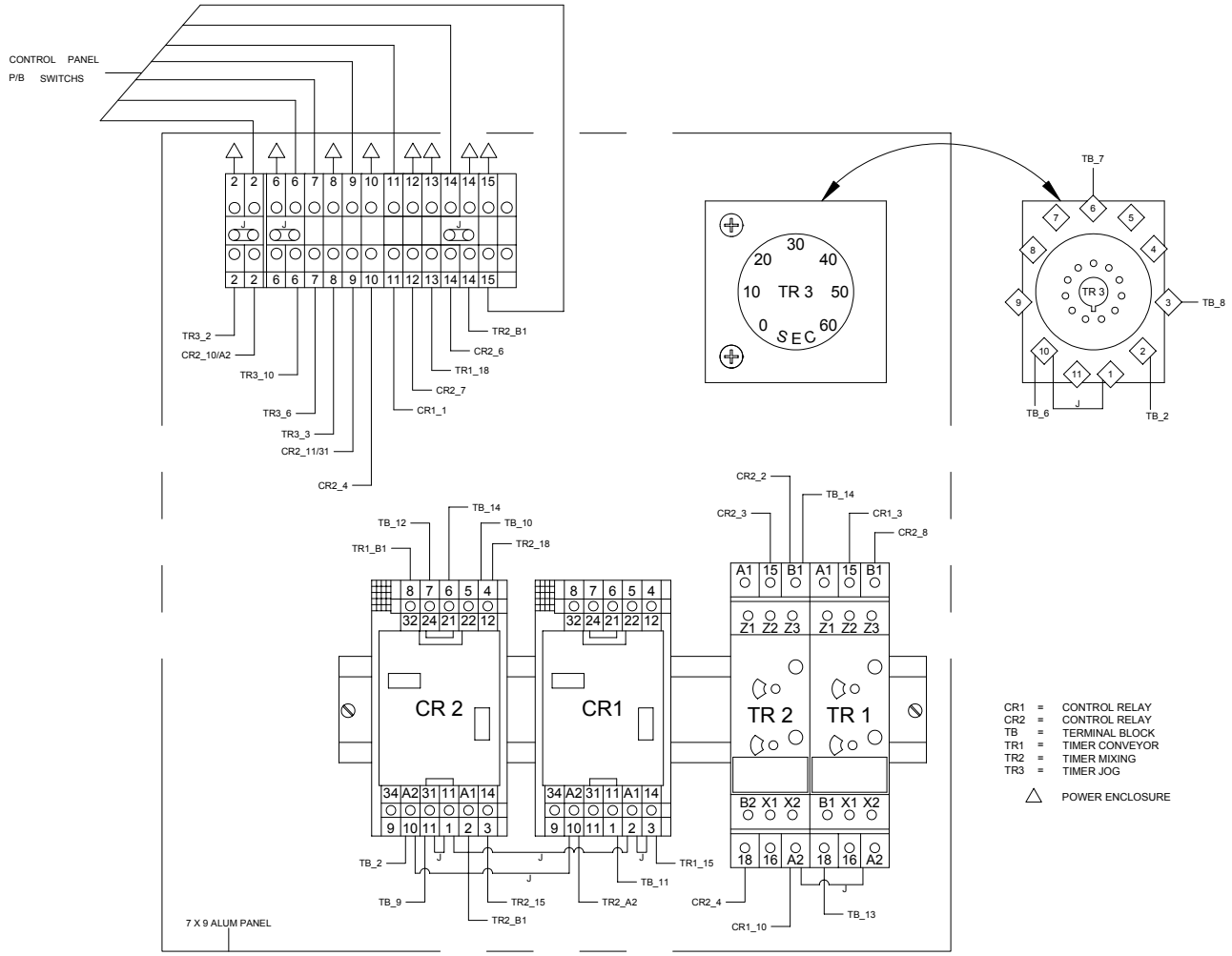

BUTCHER BOY 500 MIXER GRINDER

FOR USE WITH MANUAL ADJUSTMENT CONVEYOR

25HP, 5HP & 5HP
460VAC

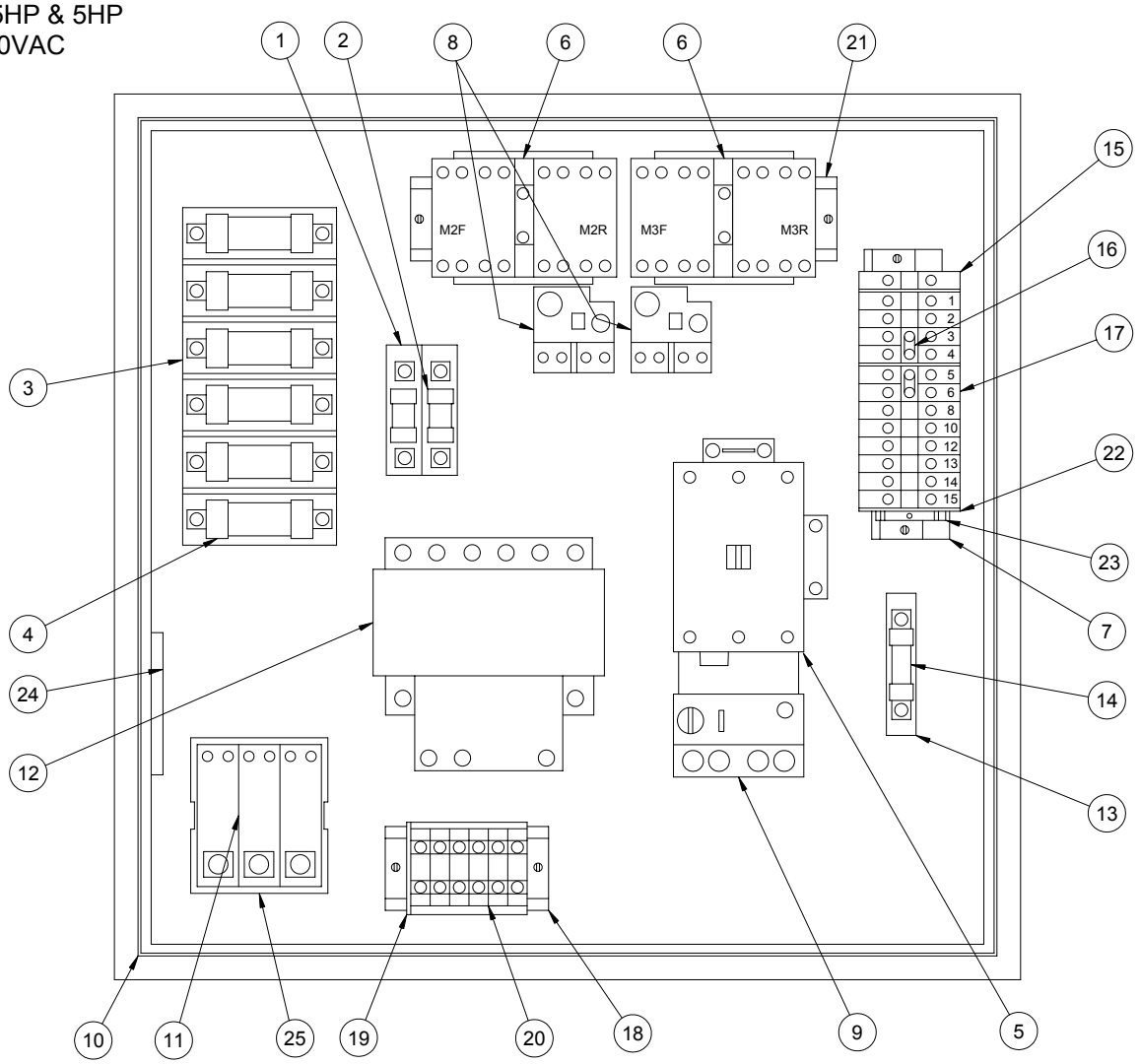

ITEM#	PART#	DESCRIPTION	QTY	ITEM#	PART#	DESCRIPTION	QTY
1	0093999-024	FUSE HOLDER (2)	1	14	0093999-050	FUSE	1
2	0093999-046	FUSE	2	15	0093999-072	GROUND TERM.	1
3	0093999-047	FUSE HOLDER (3)	2	16	0093999-071	JUMPER	2
4	0093999-048	FUSE	6	17	0093999-070	TERMINAL BLOCK	12
5	0093999-157	MOTOR CONTACTOR-GRINDER	1	18	0093796-#	RAIL-RELAY	6”
6	0093999-150	REVERSING CONTACTOR	2	19	0093999-152	END BLOCK	1
7	0093999-077	RAIL RELAY	5”	20	0093999-151	TERMINAL BLOCK	6
8	0093999-143	OVERLOAD-MIX	2	21	0093999-153	RAIL-RELAY	9”
9	0093999-169	OVERLOAD-GRINDER	1	22	0093999-069	END SEC. TERM.	1
10	0093999-142	ENCLOSURE	1	23	0093999-187	END SEC. TERM.	1
11	0093999-051	BLOCK	1	24	0093999-216	MOISTURE CAN	1
12	0093999-085	TRANSFORMER	1	25	0093999-221	BLOCK COVER	1
13	0093999-049	FUSE HOLDER	1				

BUTCHER BOY 500 MIXER GRINDER

FOR USE WITH MANUAL ADJUSTMENT CONVEYOR

40HP, 5HP & 5HP
460VAC

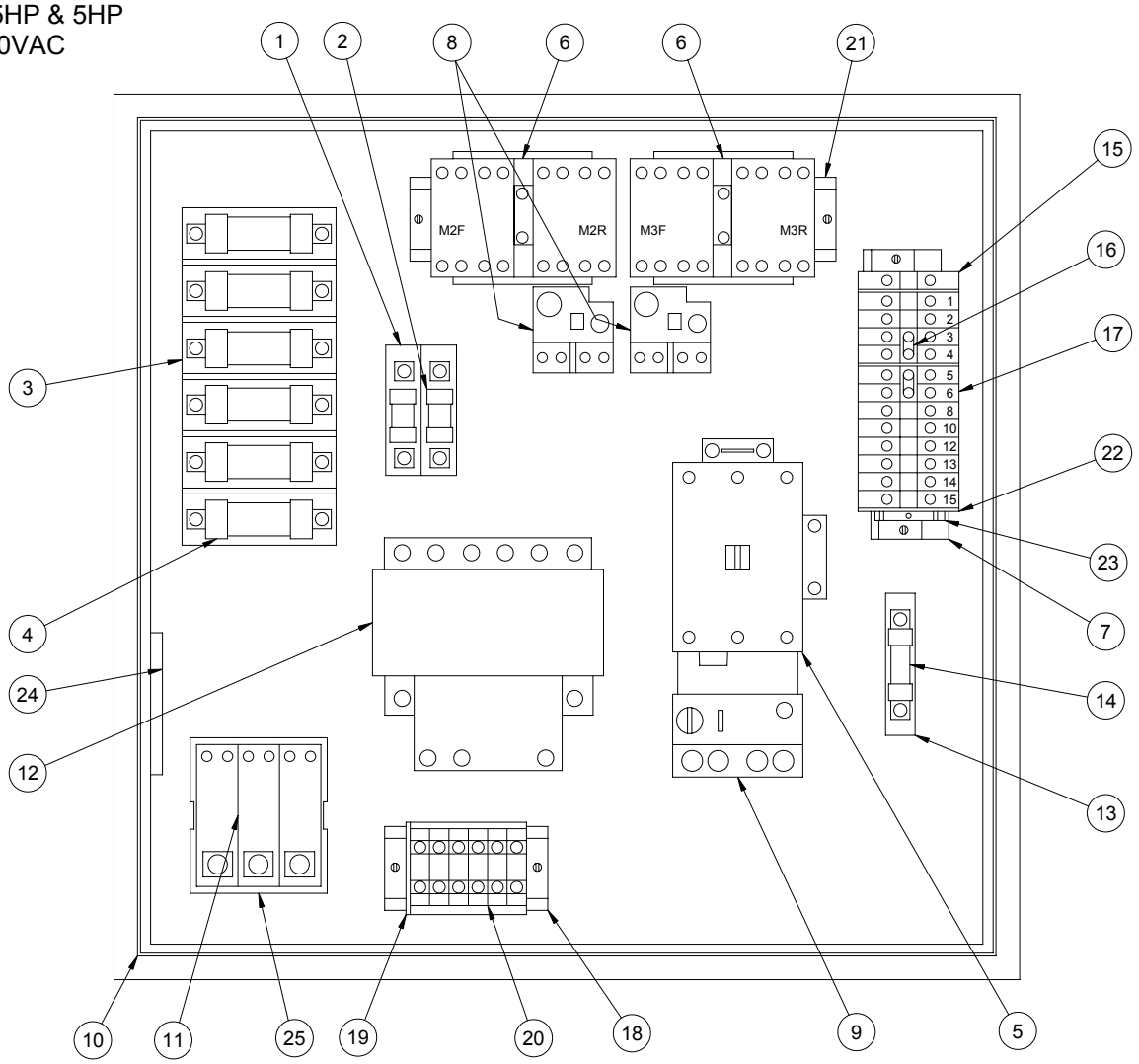

ITEM#	PART#	DESCRIPTION	QTY	ITEM#	PART#	DESCRIPTION	QTY
1	0093999-024	FUSE HOLDER (2)	1	14	0093999-050	FUSE	1
2	0093999-046	FUSE	2	15	0093999-072	GROUND TERM.	1
3	0093999-047	FUSE HOLDER (3)	2	16	0093999-071	JUMPER	2
4	0093999-048	FUSE	6	17	0093999-070	TERMINAL BLOCK	12
5	0093999-157	MOTOR CONTACTOR-GRINDER	1	18	0093796-#	RAIL-RELAY	6”
6	0093999-150	REVERSING CONTACTOR	2	19	0093999-152	END BLOCK	1
7	0093999-077	RAIL RELAY	5”	20	0093999-151	TERMINAL BLOCK	6
8	0093999-143	OVERLOAD-MIX	2	21	0093999-153	RAIL-RELAY	9”
9	0093999-218	OVERLOAD-GRINDER	1	22	0093999-069	END SEC. TERM.	1
10	0093999-142	ENCLOSURE	1	23	0093999-187	END SEC. TERM.	1
11	0093999-051	BLOCK	1	24	0093999-216	MOISTURE CAN	1
12	0093999-085	TRANSFORMER	1	25	0093999-221	BLOCK COVER	1
13	0093999-049	FUSE HOLDER	1				

BUTCHER BOY 500 MIXER GRINDER

ELECTRICAL COMPONENTS

THIS PAGE FOR USE BY QUALIFIED REPAIR TECHNICIANS ONLY

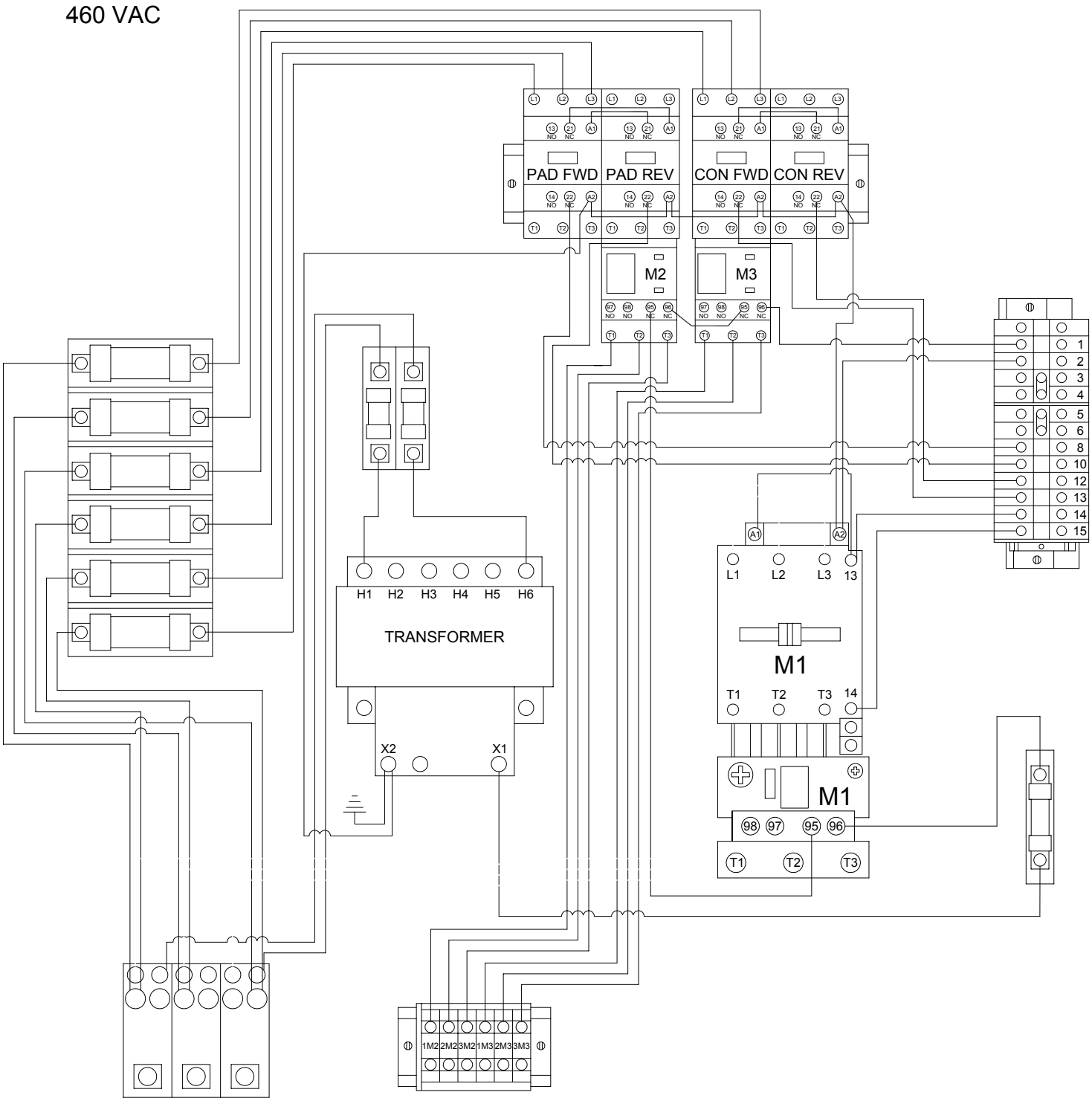

BUTCHER BOY 500 MIXER GRINDER

ELECTRICAL SCHEMATICS
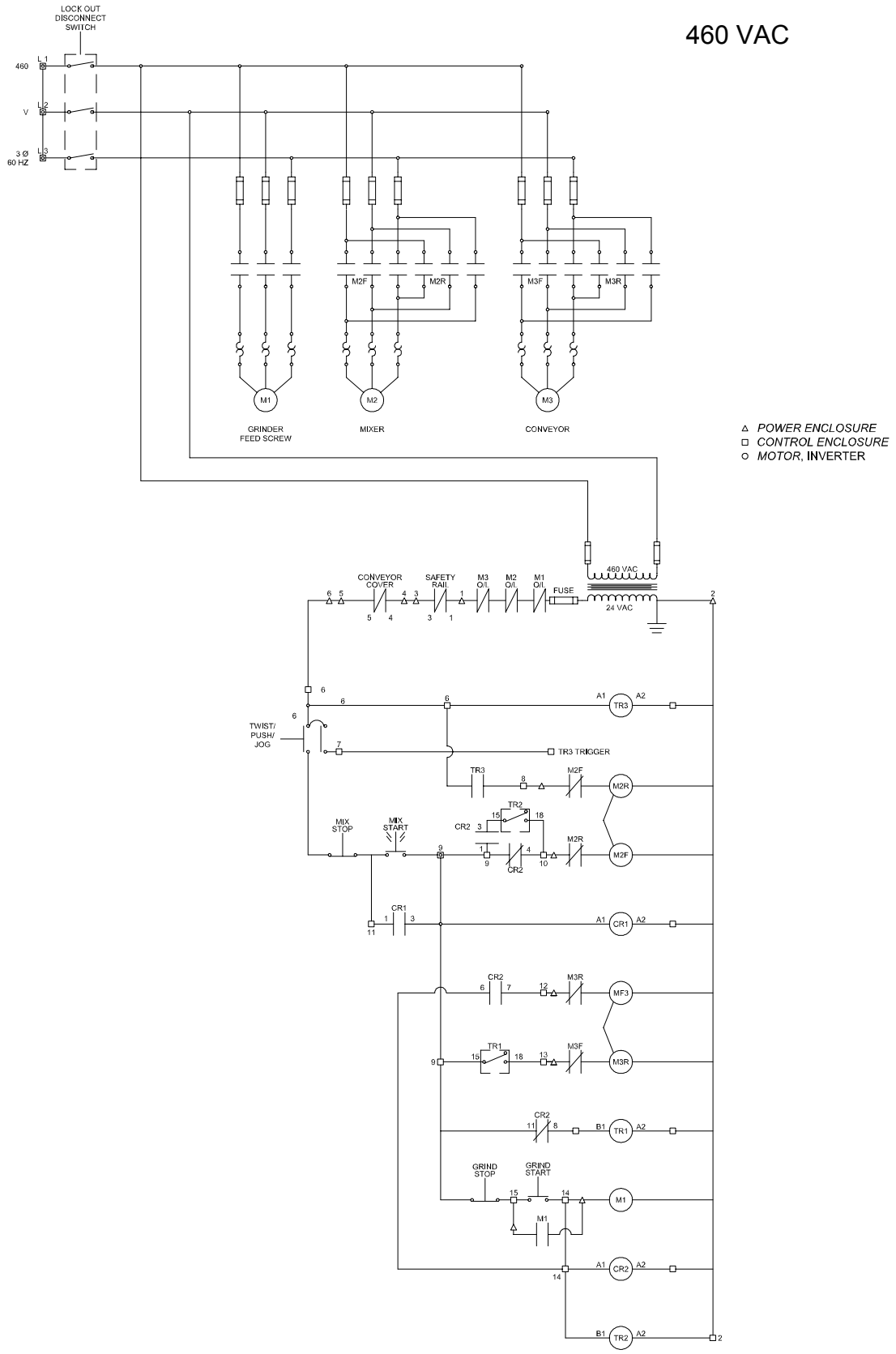
THIS PAGE FOR USE BY QUALIFIED REPAIR TECHNICIANS ONLY