BUTCHER BOY®

AU-MF STAINLESS STEEL FROZEN MEAT FLAKER

PARTS CATALOG
S/N 99100015-ON

Stainless steel drum mounted on ball bearings.

MADE IN USA

"BUTCHER BOY"

QUALITY

DEPENDABILITY

SERVICE

BUTCHER BOY AUMF

Before installing, operating or cleaning the AUMF all persons coming into contact with this equipment must read and completely understand the contents of this document.

If you have any doubts about the installation, operation or cleaning of this equipment contact the dealer from which the equipment was purchased or contact the factory.

THE BUTCHER BOY AUMF is manufactured solely to flake product that has been properly tempered to a temperature of 24 to 32 degrees Fahrenheit.

UPON RECEIPT OF THE FLAKER: Thoroughly inspect the flaker for any damage, which may have occurred during transit. If damage is detected contact the carrier for instructions.

A. INSTALLATION:
Unpack and place the flaker where it will be used.
Utilities required: Proper three phase power and 80–100 psi of clean, dry compressed air.
Make sure the flaker is configured as ordered.
Pay close attention that proper floor conditions, facilities for removal of runoff water from sanitation and sufficient access for sanitation and maintenance are present at the location.
Adjust the legs to desired working height. Level the flaker by using the adjustable feet at the end of the legs.
Electrical connections must be made by a qualified electrician and comply with all codes. Be sure of correct rotation (the teeth of the blade must move downward toward the loading tray).
All covers must be in place when running the AUMF.

SAFETY FEATURES:
Electrical Lockout Switch: This switch provides a means to padlock the switch in the open position to ensure the power is disconnected from the flaker.
Air Lockout Switch: This switch provides a means to padlock the switch in the open position to ensure the power is disconnected from the flaker.
Hopper and Discharge Lower Door Switch: These switches prevent the flaker from starting with the doors open.
Brake motor: Stops drum from coasting.
Brake Release Door Switch: This switch prevents motor from starting with motor brake release cover open. When the door is shut the door should push in the knob.
Brake Release Switch: Prevents motor from running with Knob in release position.
Belt Access Cover Switch: Prevents motor from running with cover removed.

B. TO REMOVE/INSTALL THE BLADES:
LOCKOUT THE ELECTRICAL POWER
Open the brake release door and pull the knob until it locks in the extended position. The drum may now be turned to remove the 8 blades. To install the blades, carefully inspect the blades and bolts for signs of fatigue. Place the blade in the blade pocket; be sure the blade sits flat against the drum. Install and tighten the two bolts securely but do not over tighten. Carefully rotate drum at least one revolution to check for any interference. Push in brake release, close and fasten brake release door.

C. OPERATION OF AUMF:
All covers must be in place when running the AUMF.
Start machine by pushing the start button, place block of tempered product on loading chute. **BE SURE TO STAND CLEAR OF THE LOADING CHUTE AS THE CHUTE RAISES AND LOWERS**. Raise the chute by the air control valve, when the chute is inclined enough the product will fall into the drum hopper. Lower the loading chute and the product will be compressed into the drum causing very rapid flaking. When the first block is flaked the loading chute is at the loading position awaiting the next block. When all the blocks are flaked, stop the machine with the stop button.

D. SANITATION:
LOCKOUT THE ELECTRICAL POWER
Open the front drum cover. Release motor brake. Remove the blades. The blades are sharp and should be hand cleaned and stored in approved oil until reinstalled.
Release the hopper and hinge it down to clean drum, run the loading chute up and down as needed to clean.
Spray the entire machine with approved sanitizer and oil.

BUTCHER BOY AUMF

BUTCHER BOY AUMF FLAKER STAINLESS STEEL

HOPPER, DOOR & COVERS

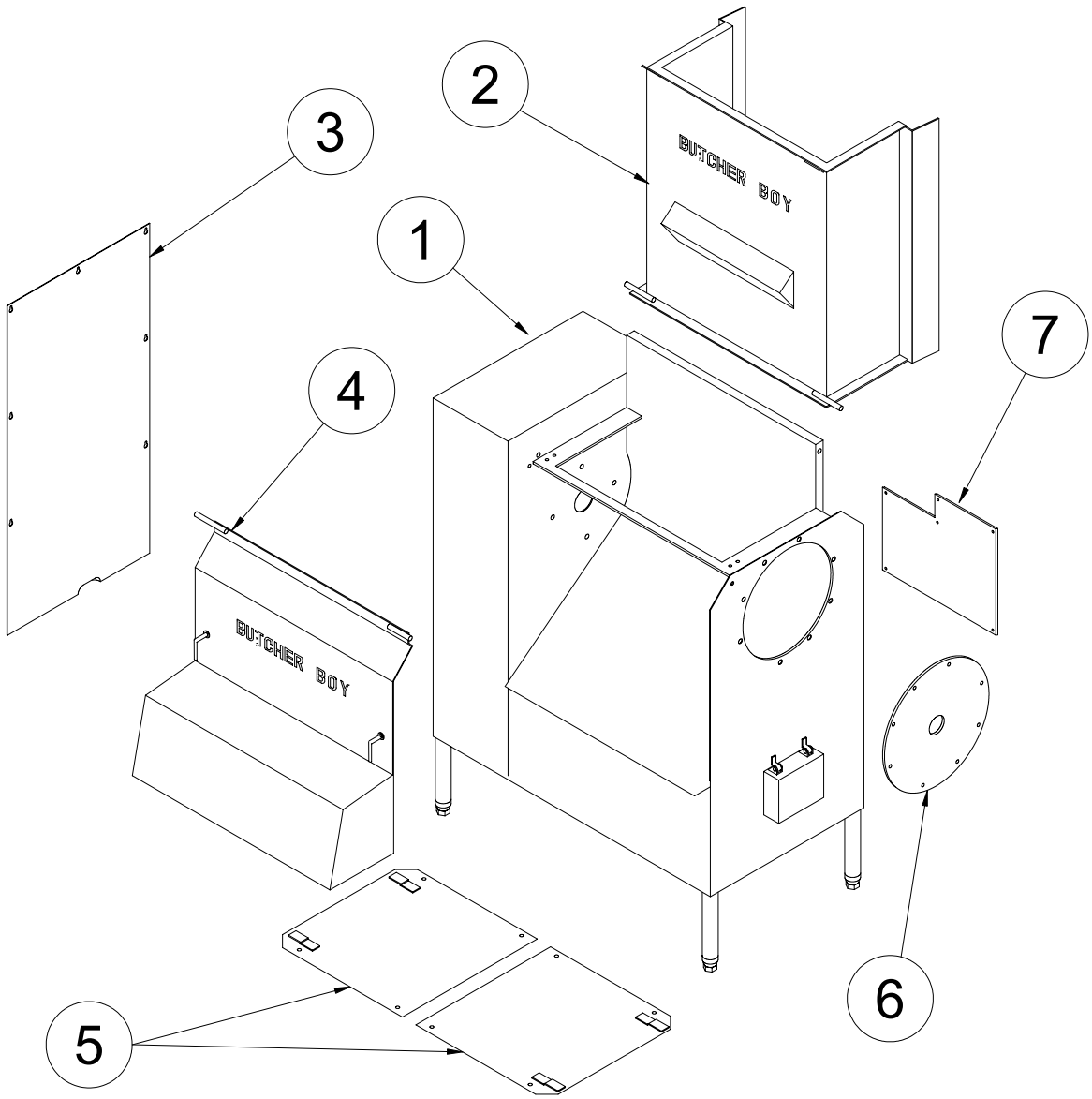

ITEM #	PART #	DESCRIPTION	QTY.
1	0028410	CABINET-SS (FOR REF. ONLY)	1
2	0028685	HINGE HOPPER ASSY-SS	1
3	0028432	BELT COVER-SS	1
4	0028740	FRONT CHUTE DOOR-SS	1
5	0028575	BOTTOM COVER-SS	2
6	0028752	BEARING PLATE-SS	1
7	0028745	ELECTRICAL ACCESS PANEL-SS	1

BUTCHER BOY AUMF FLAKER STAINLESS STEEL

HINGE HOPPER & FRONT DOOR ASSEMBLY

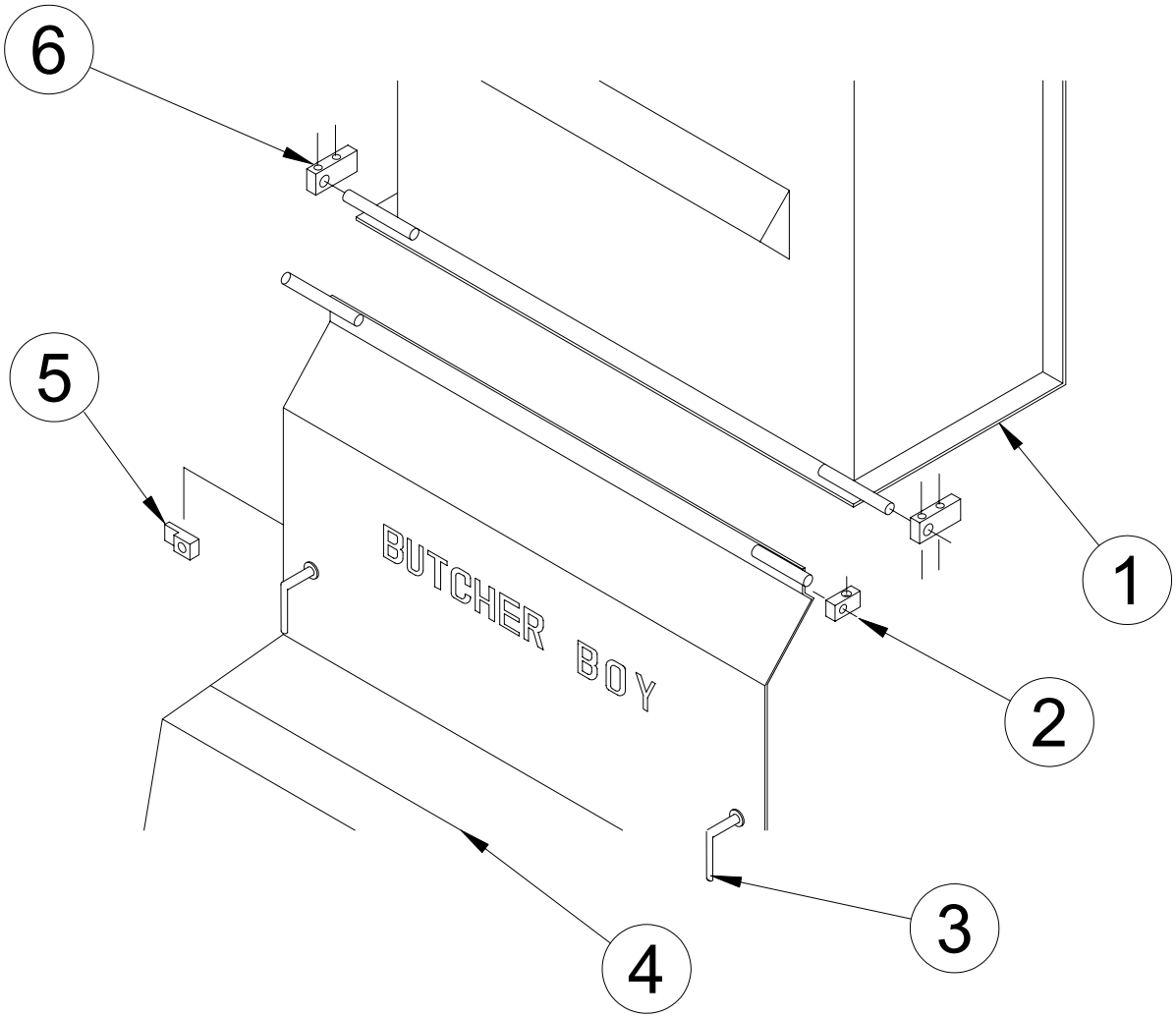

ITEM #	PART #	DESCRIPTION	QTY.
1	0028685	HINGE HOPPER ASSY-SS	1
2	0028482	HINGE BLOCK-DOOR-SS	1
3	0028505	DOOR HANDLE-SS	2
4	0028740	FRONT CHUTE-DOOR-SS	1
5	0028508	LOCK CATCH-DOOR-SS	2
6	0028647	HINGE BLOCK-HOPPER-SS	2

BUTCHER BOY AUMF FLAKER STAINLESS STEEL

SAFETY INTERLOCK FOR HOPPER & FRONT DOORS

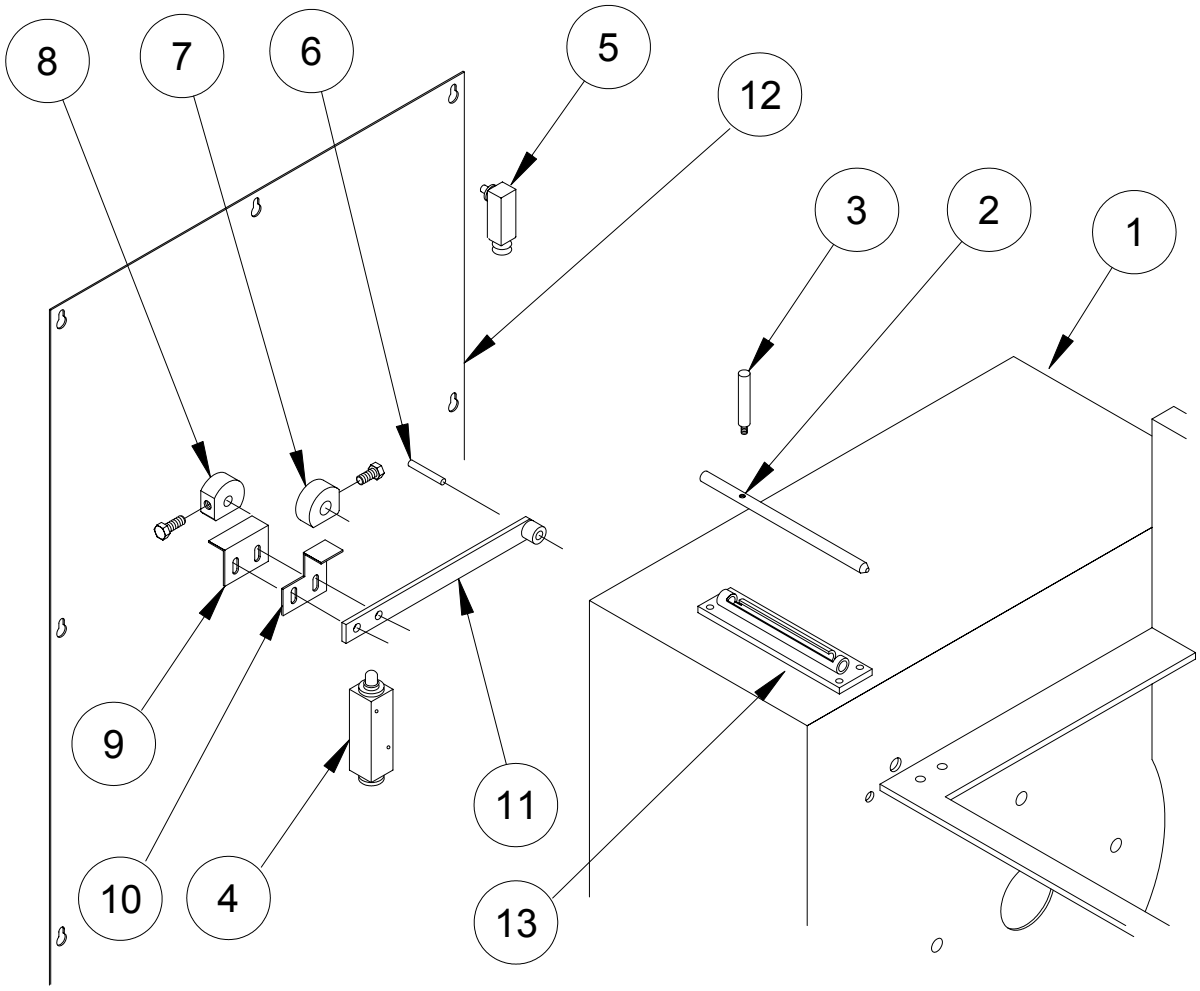

ITEM #	PART #	DESCRIPTION	QTY.
1	0028410	CABINET ASSY-SS (REF ONLY)	1
2	0028723	SLIDE PIN	1
3	0028718	HANDLE-SLIDE PIN	1
4	0093271	LIMIT SWITCH	1
5	0093855	LIMIT SWITCH	1
6	0028596S	SWITCH LEVER STUD	1
7	0028649	SWITCH CAM-HOPPER (1/2)	1
8	0028561	SWITCH CAM-DOOR (3/8)	1
9	0028560S	ANGLE-CAM-DOOR	1
10	0028559S	ANGLE-CAM-HOPPER	1
11	0028705S	SWITCH LEVER ASSEMBLY	1
12	0028432	BELT COVER-SS	1
13	0028720	LATCH	1

BUTCHER BOY AUMF FLAKER STAINLESS STEEL

RELEASE ASSEMBLY FOR BRAKE MOTOR

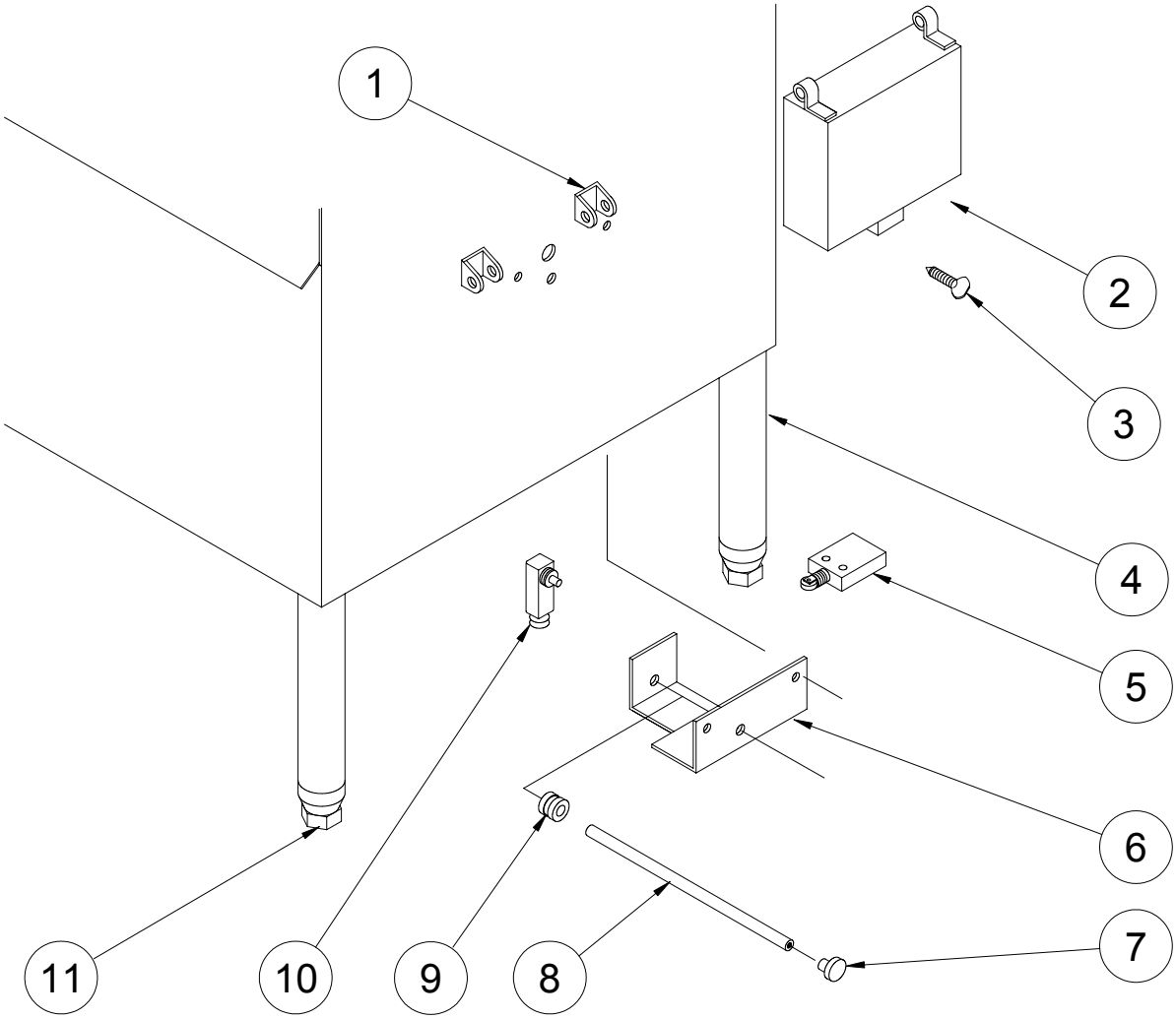

ITEM #	PART #	DESCRIPTION	QTY.
1	0010571	HINGE-SS	2
2	0028755	COVER-BRAKE HANDLE	1
3	0022085	THUMB SCREW	1
4	0028551	LEG ASSEMBLY-SS	4
5	0093999-141	LIMIT SWITCH (ROLLER)	2
6	0028735	BRACKET-BRAKE LEVER	1
7	0095317	KNOB	1
8	0028709	LEVER-BRAKE	1
9	0028734	COLLAR-BRAKE LEVER	1
10	0093855	LIMIT SWITCH-COVER	1
11	HHCS-34-56-SS	FOOT-SS	4

BUTCHER BOY AUMF FLAKER STAINLESS STEEL

AUMF FLAKER SS CUTTING DRUM ASSEMBLY AND ACCESSORYS

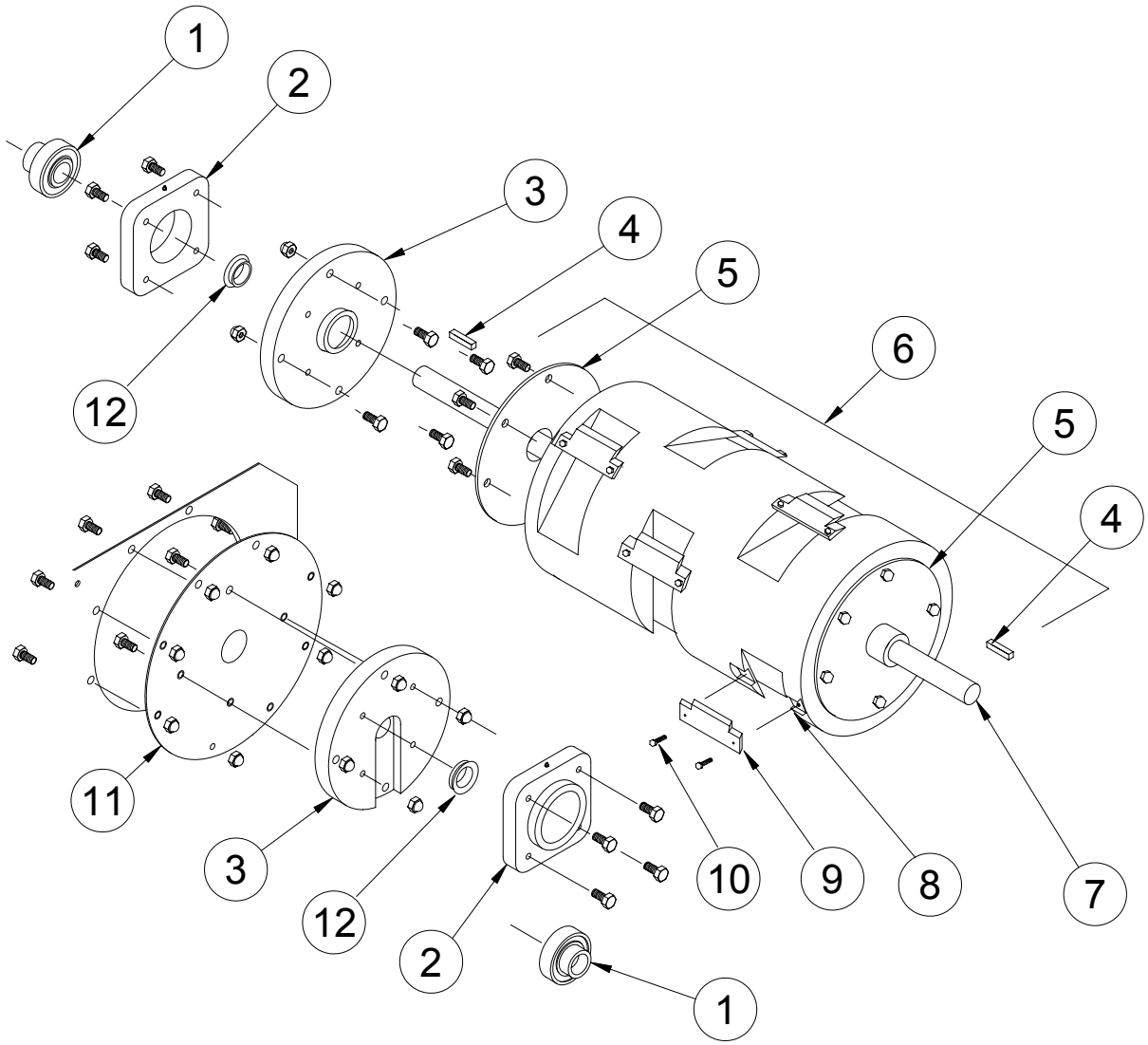

ITEM #	PART #	DESCRIPTION	QTY.
1	0090354	BEARING	2
2	0090353	HOUSING BEARING	2
3	0028751	BEARING MOUNT	2
4	0028202	KEY	3
5	0028235S	SS END PLATE-DRUM	2
6	0028201S	DRUM AND SHAFT ASSEMBLY	1
7	0028700S	SHAFT-SS	1
8	0028619	THREADED INSERT-DRUM	16
9	0028129	KNIFE	8
10	HHCS-21-16-SS	HEX BOLT-SS	16
11	0028752	BEARING PLATE-SS (CAB)	1
12	0090484	V-SEAL	2

BUTCHER BOY AUMF FLAKER STAINLESS STEEL

UPPER GUIDE CHANNEL & SUPPORT

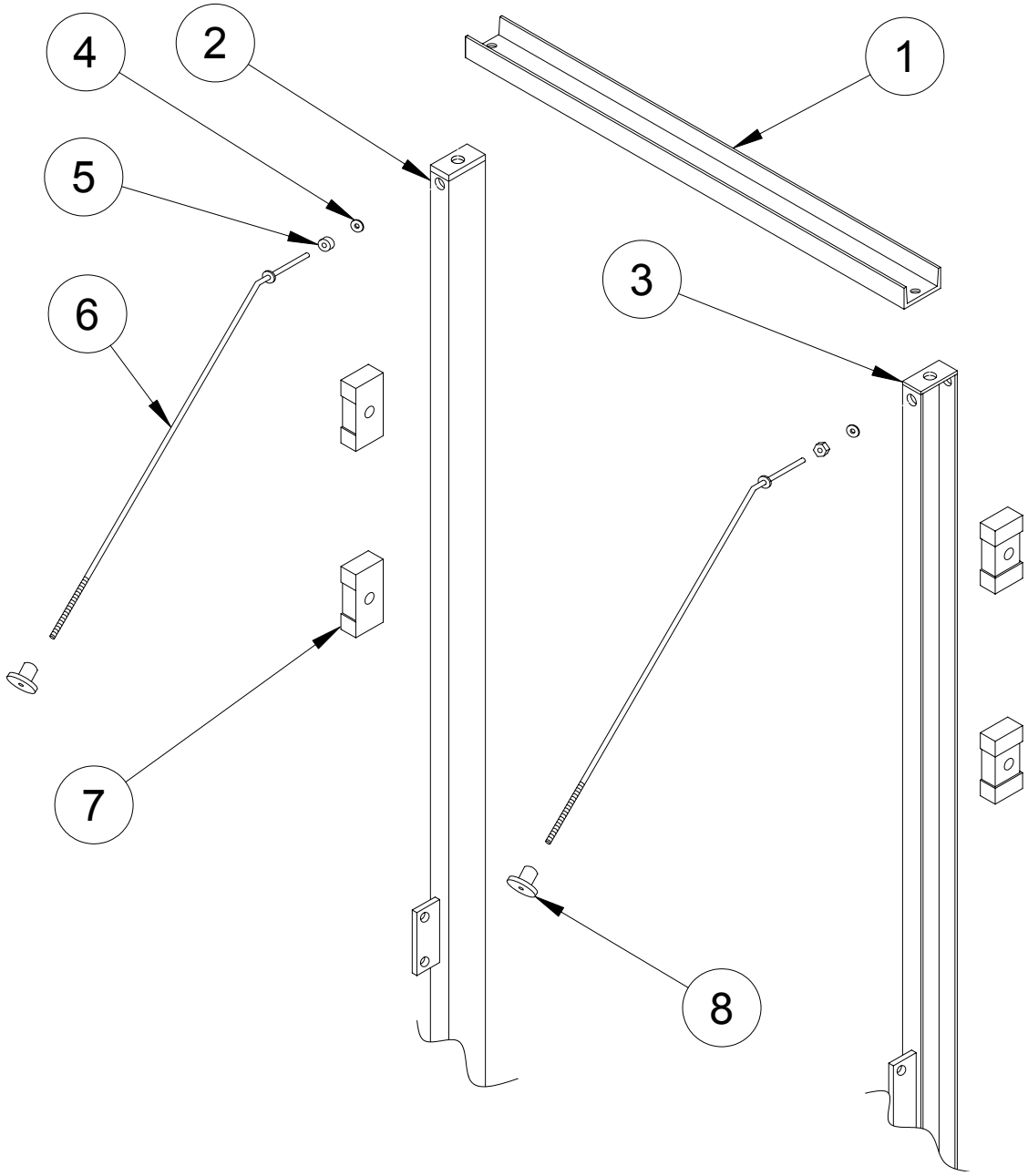

ITEM #	PART #	DESCRIPTION	QTY.
1	0028308S	UPPER GUIDE CHANNEL-SS	1
2	0028424S	GUIDE CHANNEL-REAR-SS	1
3	0028423S	GUIDE CHANNEL-FRONT-SS	1
4	0090602	RUBBER WASHER	2
5	0028603	COLLAR	2
6	0028669	TIE ROD-HOPPER-SS	2
7	0028147	SLIDE BLOCK	4
8	0010399	KNOB	2

BUTCHER BOY AUMF FLAKER STAINLESS STEEL

LIFTING FRAME, HOPPER, & PRESSURE PLATE ASSY

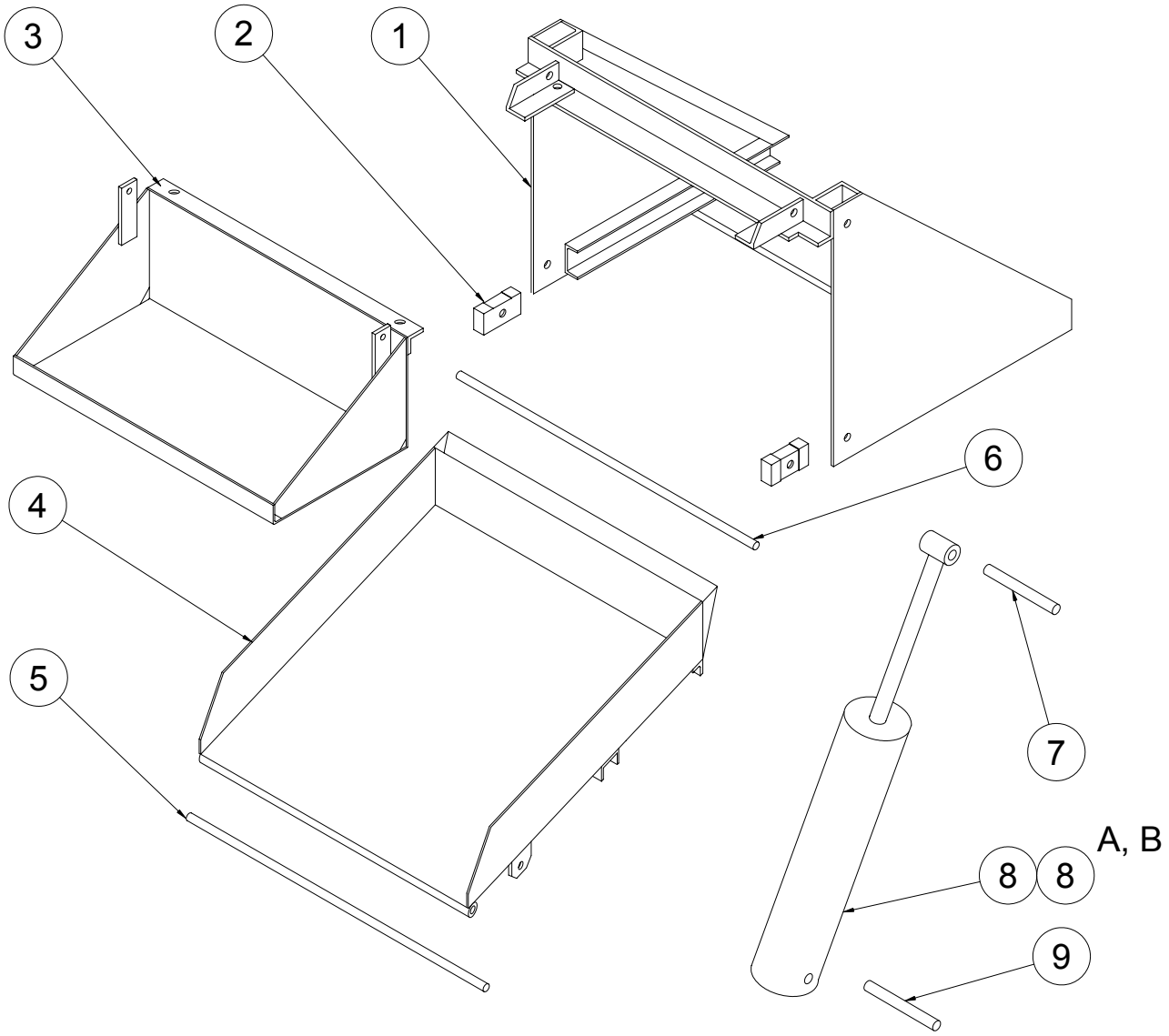

ITEM #	PART #	DESCRIPTION	QTY.
1	0028435	LIFTING FRAME ASSEMBLY-SS	1
2	0028367	SLIDE BLOCK-LIFTING FRAME	2
3	0028676	PRESSURE PLATE ASSEMBLY-SS	1
4	0028448	LIFTING HOPPER ASSEMBLY-SS	1
5	0028479	PIVOT-LIFTING HOPPER-SS	1
6	0028604	PIVOT-SLIDE BLOCK-SS	1
7	0028529	PIN-UPPER-CYLINDER-SS	1
8	0028227S	AIR CYLINDER-SS	1
8	0028227S-1	SEAL & BUSHING KIT, AIR CYLINDER-SS	1
9	0028528	PIN-LOWER-CYLINDER-SS	1

BUTCHER BOY AUMF FLAKER STAINLESS STEEL

BRAKE MOTOR & DRIVE COMPONTENTS

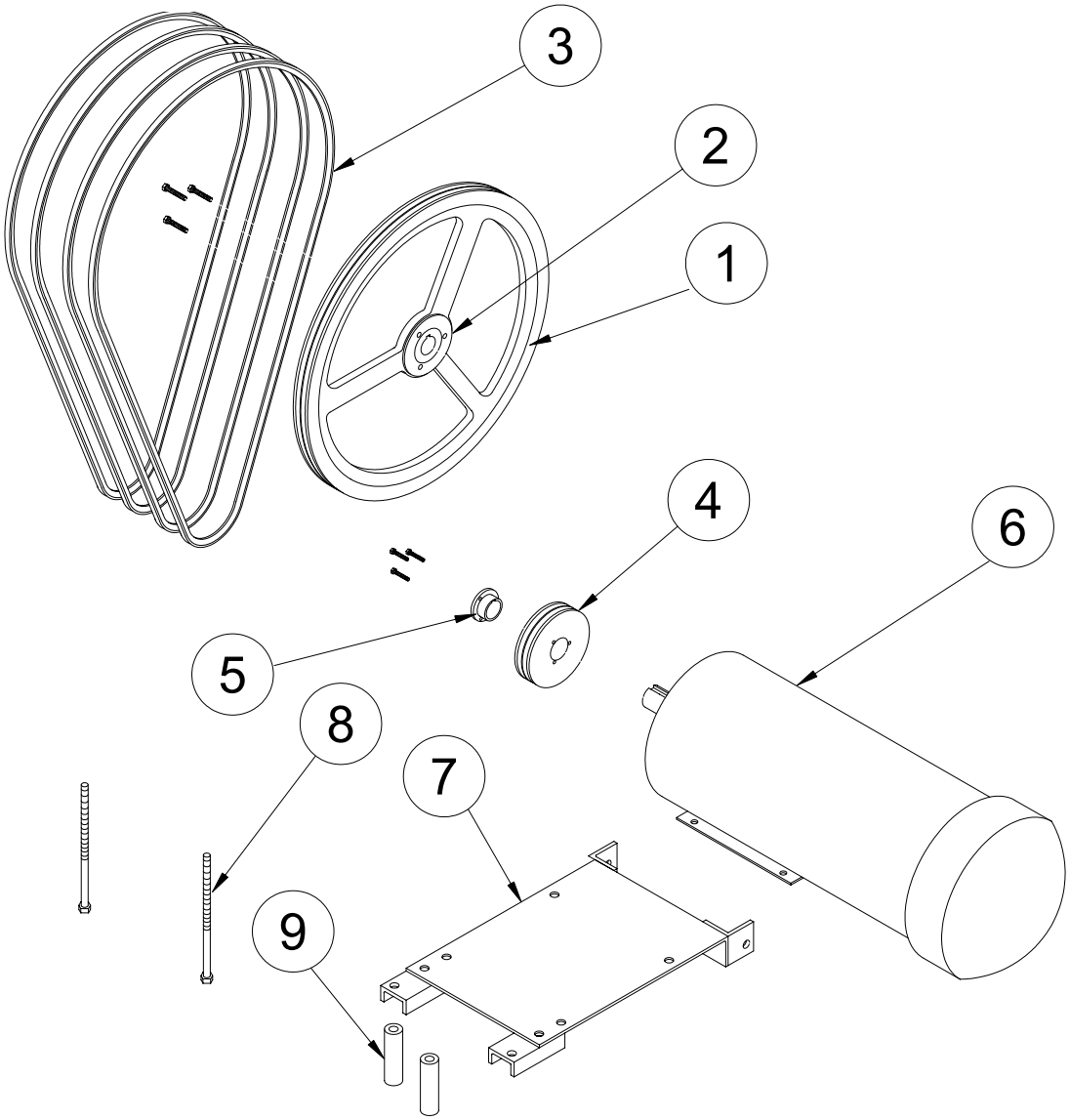

ITEM #	PART #	DESCRIPTION	QTY.
1	0090159	DRIVEN PULLEY	1
2	0090160	HUB-DRIVEN PULLEY	1
3	0090512	BELT	4
4	0090114	DRIVE PULLEY	1
5	0090149	HUB-DRIVE PULLEY	1
*6	0092259	BRAKE MOTOR-10hp	1
7	0028365S	MOTOR BASE-SS	1
8	0028689	MOTOR TENSION BOLT-SS	2

* FOR PARTS ON BRAKE MOTOR CALL AMERICAN MEAT EQUIPMENT CORP. WITH SERIAL NUMBER ON BRAKE MOTOR.

BUTCHER BOY AUMF FLAKER STAINLESS STEEL

AUMF PNEUMATICS

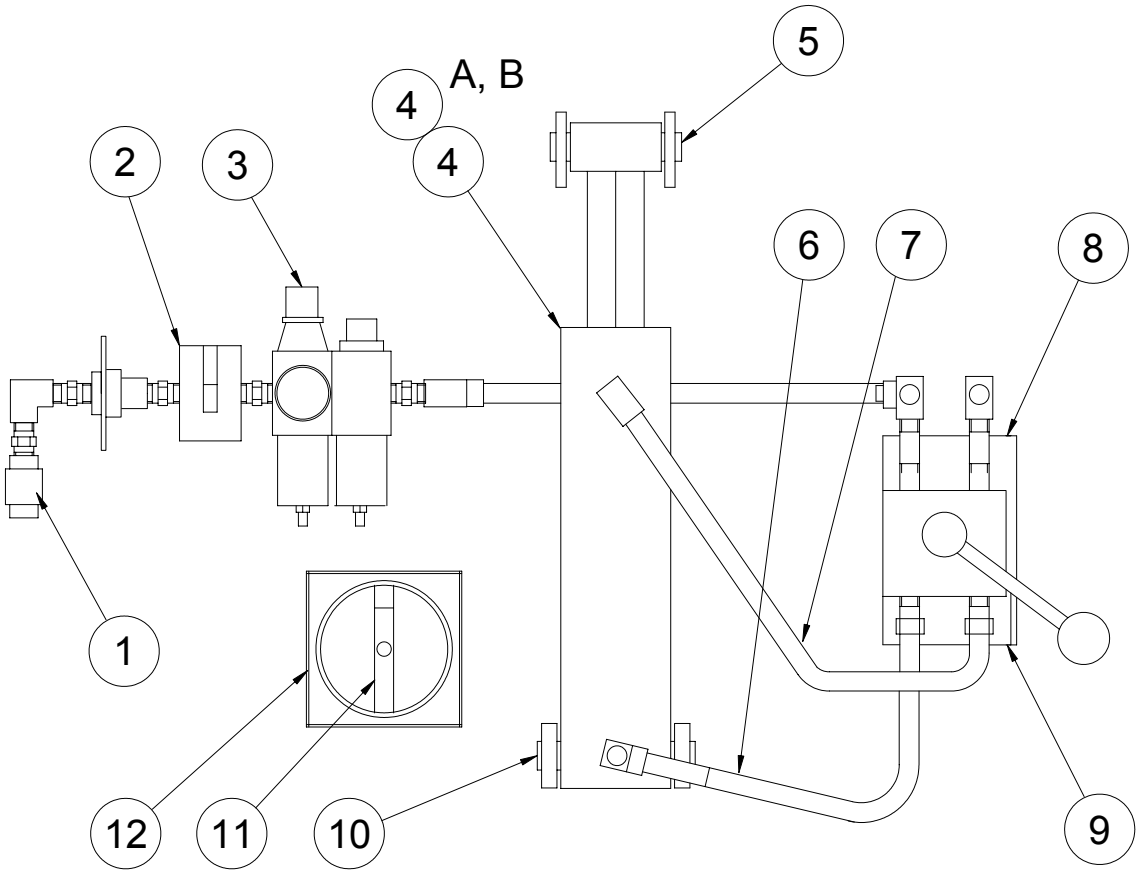

ITEM #	PART #	DESCRIPTION	QTY.
1	0095760	CHECK VALVE	1
2	0095759	SAFETY LOCKOUT VALVE-AIR	1
3	0095758	FILTER/REG/LUB. STACKED	1
4	0028227S	AIR CYLINDERS-SS	1
4A	0028277S-1	SEAL & BUSHING KIT, AIR CYLINDERS-SS	1
5	0028529	PIN-UPPER-CYLINDER-SS	1
6	0028380	AIR HOSE-OUTLET	1
7	0028381	AIR HOSE-INLET	1
8	0090690	AIR CONTROL VALVE	1
9	0028333	BRACKET-SS	1
10	0028528	PIN-LOWER-CYLINDER-SS	1
11	0093999-055	ACTUATOR	1
12	0093999-023	DISCONNECT SWITCH	1

BUTCHER BOY AUMF FLAKER STAINLESS STEEL

AUMF PNEUMATICS FITTINGS

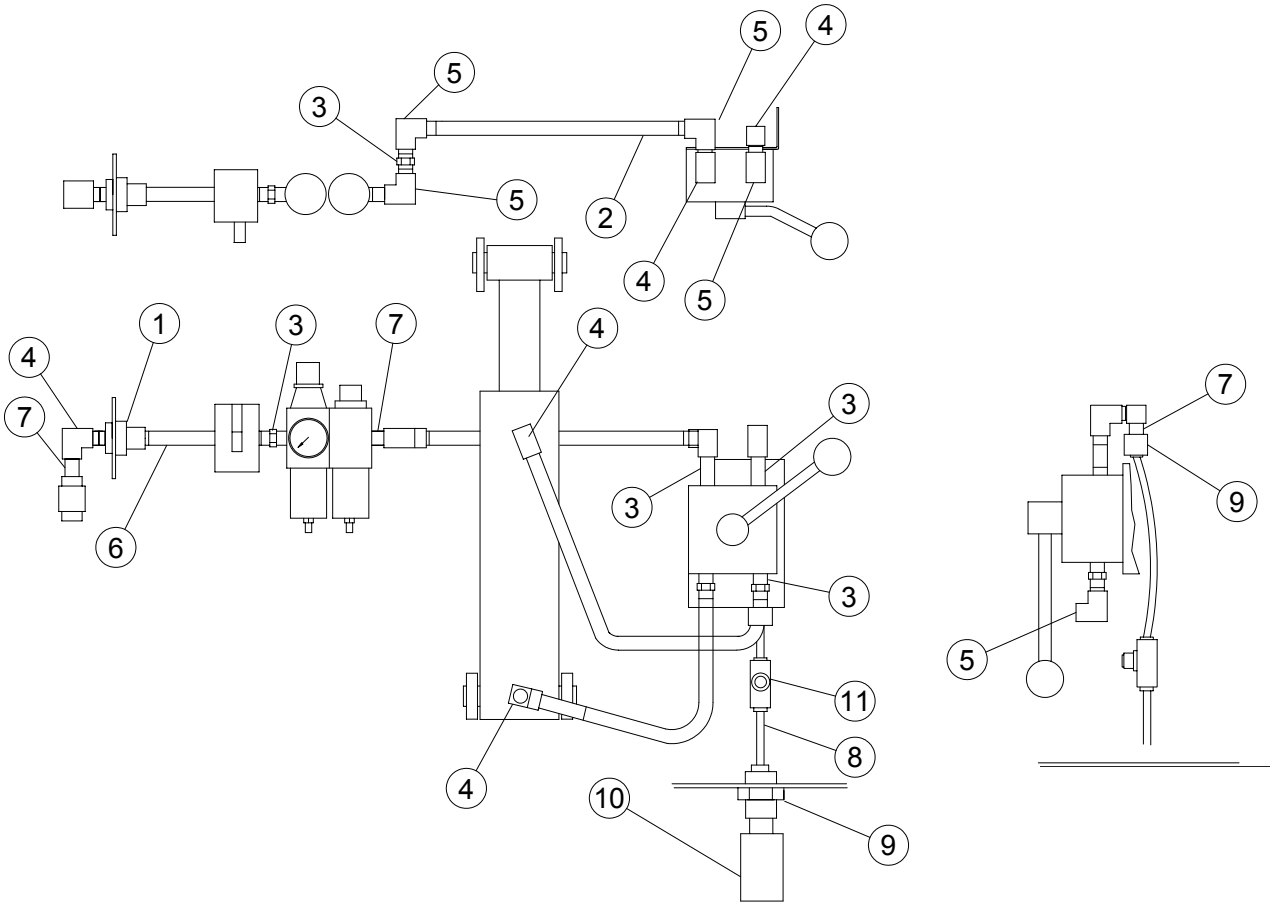

ITEM #	PART #	DESCRIPTION	QTY.
1	0095741	BRASS FITTING (1/4 PT BULKHEAD)	1
2	0095777	BRASS PIPE NIPPLE (1/4 PT X 10” LG)	1
3	0090687	BRASS HEX NIPPLE (1/4 PT X 1 ½” LG)	5
4	0090635	BRASS ST. ELBOW (1/4 PT X 90°)	5
5	0090688	BRASS ELBOW (1/4 (F) X 1/4 (F) X 90°)	5
6	0095778	BRASS NIPPLE (1/4 PT X 3” LG)	1
7	0095779	BRASS NIPPLE (1/4 CLOSE)	2
8	0095780	TUBE (1/4 OD TUBE X 12”)	1
9	0095781	BULKHEAD CONNECTOR (1/4 PT TO 1/4 OD)	2
10	0095782	FILTER	1
11	0095784	VALVE (1/4 OC TO 1/4 OD)	1

BUTCHER BOY AUMF FLAKER STAINLESS STEEL

AUMF ELECTRICAL COMPONTENTS

THERE ARE NO USER SERVICABLE COMPONETS IN
THE ELECTRICAL ENCLOSURE. REFER ALL REPARIS TO
A QUALIFIED TECHNICIAN.

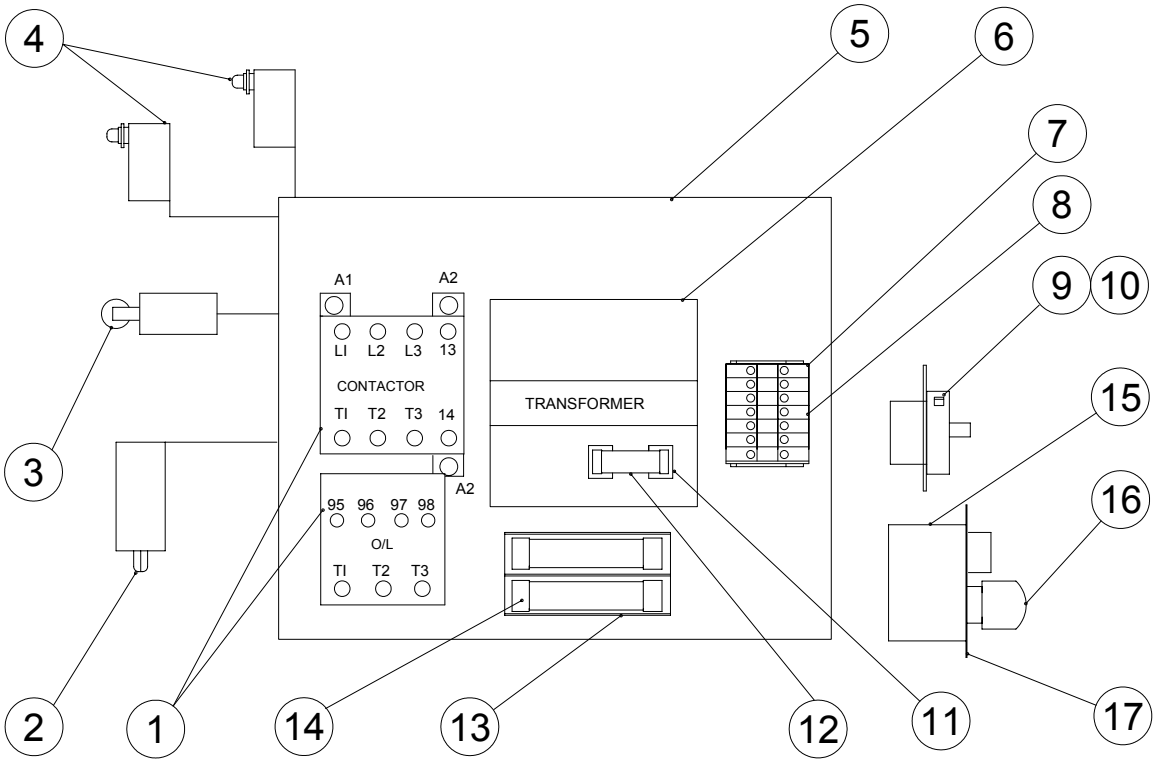

ITEM#	PART#	DESCRIPTION	QTY.
1	0093999-139	CONTACT & O/L (230V)	1
	0093999-138	CONTACT & O/L (460V)	1
2	0093271	LIMIT SWITCH	1
3	0093999-140	LIMIT SWITCH W/ROLLER	1
4	0093855	LIMIT SWITCH PANEL MT.	2
5	0093999-052	ENCLOSURE	1
6	0093999-226	TRANSFORMER (208 & 230V)	1
	0093999-095	TRANSFORMER (460V)	1
7	0093999-069	GROUND TERMINAL	1
8	0093999-070	TERMINAL BLOCK	6
9	0093999-023	DISONNECT SWITCH	1
10	0093999-055	ACTUATOR	1
11	0093999-096	FUSE CLIP	1
12	0093999-018	2.8A FUSE	1
13	0093999-024	FUSE HOLDER (2)	1
14	0093999-017	15/100A FUSE (460V)	2
	0093999-046	6/10A FUSE (230V)	2
15	0093285	START/STOP SWITCH ASSEMBLY	1
16	0093290	STOP BUTTON	1
17	0040104	SWITCH PLATE	1

BUTCHER BOY AUMF FLAKER STAINLESS STEEL

AUMF WIRING DIAGRAM

POINT TO POINT

A QUALIFIED ELECTRICIAN SHOULD PERFORM ALL WIRING.

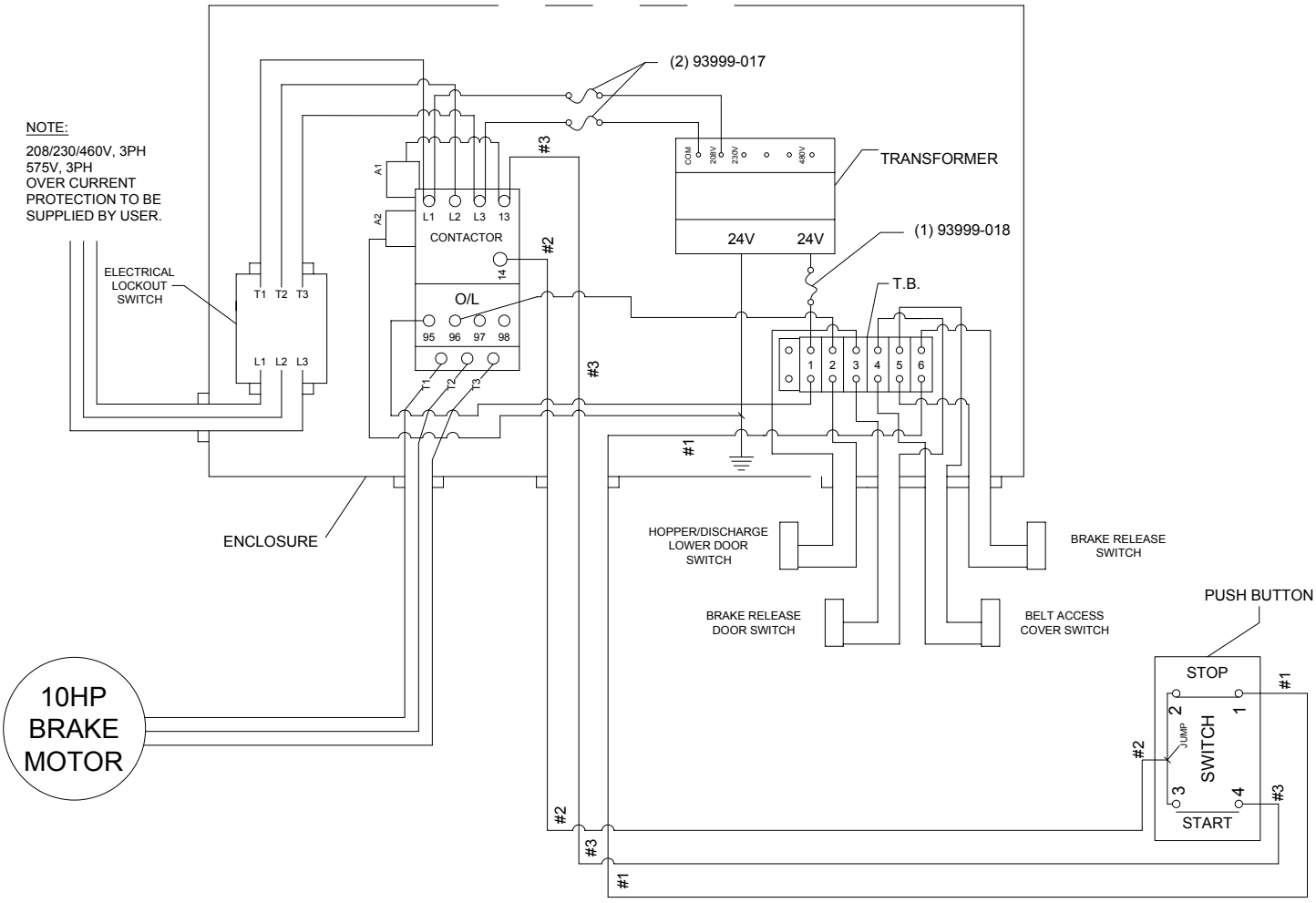

AUMF WIRING DIAGRAM

SCHEMATIC
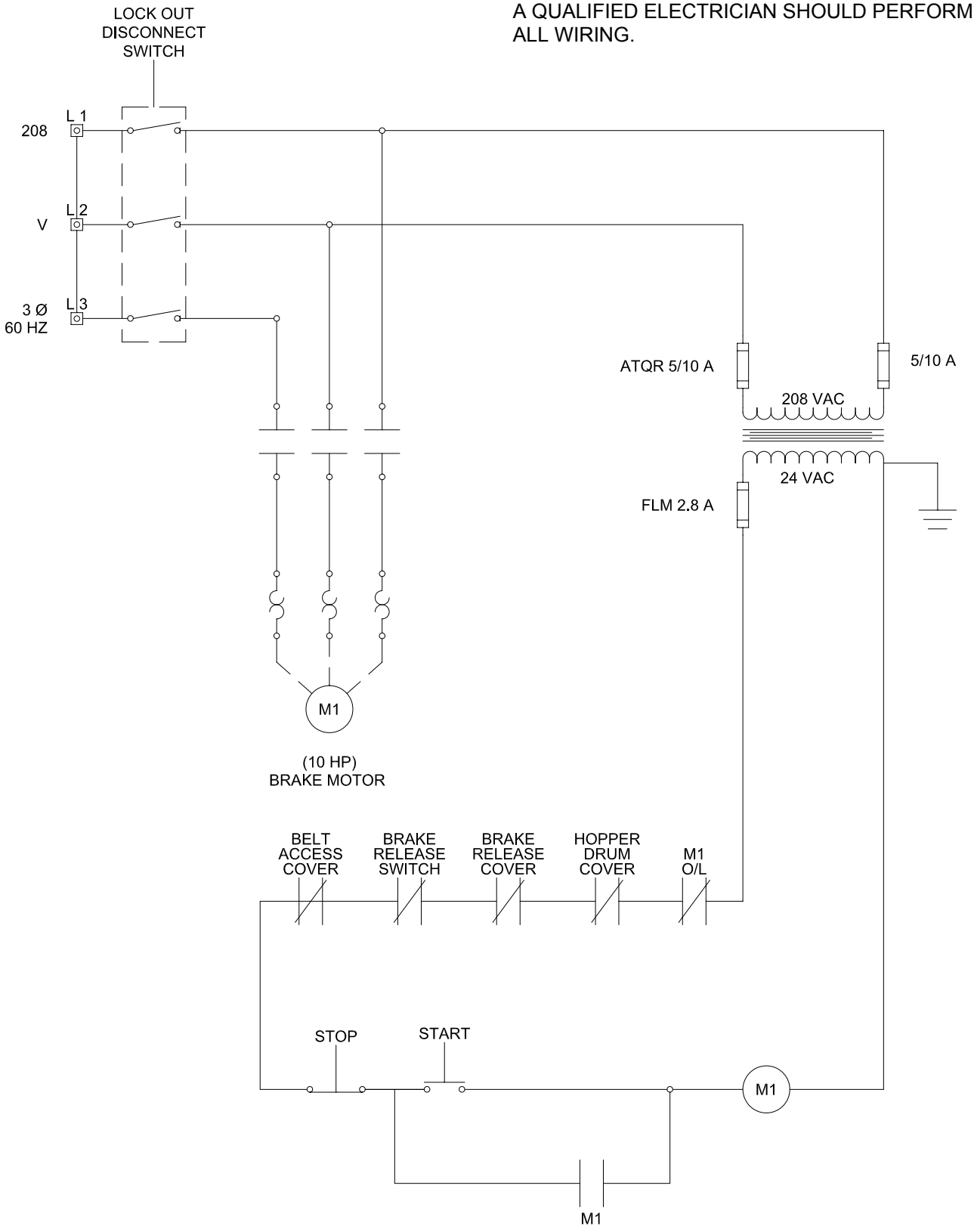
A QUALIFIED ELECTRICIAN SHOULD PERFORM ALL WIRING.