xylem
Let's Solve Water

INSTRUCTION MANUAL

P2003449 REV C

Series e-60

Bell & Gossett
a xylem brand

Table of Contents

1 Introduction and Safety....3
1.1 Introduction....3
1.2 Safety....3
1.2.1 Safety terminology and symbols....3
1.2.2 User safety....4
1.2.3 Protecting the environment....5

2 Transportation and Storage....6
2.1 Examine the delivery....6
2.1.1 Examine the package....6
2.1.2 Examine the unit....6
2.2 Pump lifting....6
2.3 Long-term storage....6

3 Product Description....8
3.1 General description....8
3.2 Operational specifications....8

4 Installation....9
4.1 Preinstallation....9
4.1.1 Pump location guidelines....9
4.1.2 Piping checklist....10
4.1.3 Pump orientation....11
4.1.4 Special installation....12
4.2 Connect the wiring....13
4.2.1 Wiring diagrams....13

5 Commissioning, Startup, Operation, and Shutdown....15
5.1 Preparation for startup....15
5.1.1 Check the rotation....15
5.2 Lubrication requirements....16
5.3 Prime the pump....16
5.4 Start the pump....16
5.5 Pump operation precautions....17
5.6 Shut down the pump....17

6 Maintenance....18
6.1 Disassembly....18
6.1.1 Disassembly precautions....18
6.1.2 Drain the pump....18
6.1.3 Remove the motor and coupler....18
6.1.4 Remove the bearing assembly and impeller....19
6.1.5 Remove the seal....21
6.2 Pre-assembly inspections....21
6.2.1 Replacement guidelines....22
6.3 Reassembly....22
6.3.1 Reinstall the seal....22
6.3.2 Reinstall the bearing assembly and impeller....22
6.3.3 Reinstall the spring type coupler and motor....23
6.3.4 Reinstall the elastomeric type coupler and motor....23

6.3.5 Capscrew torque values 24
6.3.6 Dealer servicing 24

7 Parts Listings and Cross-Sectional Drawings 25
7.1 Cross-sectional drawings 25

8 Product Warranty 29

1 Introduction and Safety

1.1 Introduction

Purpose of this manual

The purpose of this manual is to provide necessary information for:

- Installation
- Operation
- Maintenance

CAUTION:

Read this manual carefully before installing and using the product. Improper use of the product can cause personal injury and damage to property, and may void the warranty.

NOTICE:

Save this manual for future reference, and keep it readily available at the location of the unit.

Requesting other information

Special versions can be supplied with supplementary instruction leaflets. See the sales contract for any modifications or special version characteristics. For instructions, situations, or events that are not considered in this manual or in the sales documents, please contact the nearest Xylem representative.

Always specify the exact product type and identification code when requesting technical information or spare parts.

1.2 Safety

WARNING:

- The operator must be aware of safety precautions to prevent physical injury.
- Operating, installing, or maintaining the unit in any way that is not covered in this manual could cause death, serious personal injury, or damage to the equipment. This includes any modification to the equipment or use of parts not provided by Xylem. If there is a question regarding the intended use of the equipment, please contact a Xylem representative before proceeding.
- Do not change the service application without the approval of an authorized Xylem representative.

CAUTION:

You must observe the instructions contained in this manual. Failure to do so could result in physical injury, damage, or delays.

1.2.1 Safety terminology and symbols

About safety messages

It is extremely important that you read, understand, and follow the safety messages and regulations carefully before handling the product. They are published to help prevent these hazards:

- Personal accidents and health problems
- Damage to the product and its surroundings
- Product malfunction

Hazard levels

Hazard level	Indication
DANGER:	A hazardous situation which, if not avoided, will result in death or serious injury
WARNING:	A hazardous situation which, if not avoided, could result in death or serious injury
CAUTION:	A hazardous situation which, if not avoided, could result in minor or moderate injury
NOTICE:	Notices are used when there is a risk of equipment damage or decreased performance, but not personal injury.

Special symbols

Some hazard categories have specific symbols, as shown in the following table.

Electrical hazard	Magnetic fields hazard
Electrical Hazard:	CAUTION:

1.2.2 User safety

General safety rules

These safety rules apply:

- Always keep the work area clean.
- Pay attention to the risks presented by gas and vapors in the work area.
- Avoid all electrical dangers. Pay attention to the risks of electric shock or arc flash hazards.
- Always bear in mind the risk of drowning, electrical accidents, and burn injuries.

Safety equipment

Use safety equipment according to the company regulations. Use this safety equipment within the work area:

- Hard hat
- Safety goggles, preferably with side shields
- Protective shoes
- Protective gloves
- Gas mask
- Hearing protection
- First-aid kit
- Safety devices

NOTICE:

Never operate a unit unless safety devices are installed. Also see specific information about safety devices in other chapters of this manual.

Electrical connections

Electrical connections must be made by certified electricians in compliance with all international, national, state, and local regulations. For more information about requirements, see sections dealing specifically with electrical connections.

Precautions before work

Observe these safety precautions before you work with the product or are in connection with the product:

- Provide a suitable barrier around the work area, for example, a guard rail.
- Make sure that all safety guards are in place and secure.
- Make sure that you have a clear path of retreat.
- Make sure that the product cannot roll or fall over and injure people or damage property.
- Make sure that the lifting equipment is in good condition.
- Use a lifting harness, a safety line, and a breathing device as required.
- Allow all system and pump components to cool before you handle them.
- Make sure that the product has been thoroughly cleaned.
- Disconnect and lock out power before you service the pump.
- Check the explosion risk before you weld or use electric hand tools.

1.2.2.1 Wash the skin and eyes

Follow these procedures for chemicals or hazardous fluids that have come into contact with your eyes or your skin:

Condition	Action
Chemicals or hazardous fluids in eyes	1. Hold your eyelids apart forcibly with your fingers. 2. Rinse the eyes with eyewash or running water for at least 15 minutes. 3. Seek medical attention.
Chemicals or hazardous fluids on skin	1. Remove contaminated clothing. 2. Wash the skin with soap and water for at least 1 minute. 3. Seek medical attention, if necessary.

1.2.3 Protecting the environment

Emissions and waste disposal

Observe the local regulations and codes regarding:

- Reporting of emissions to the appropriate authorities
- Sorting, recycling and disposal of solid or liquid waste
- Clean-up of spills

Exceptional sites

CAUTION: Radiation Hazard

Do NOT send the product to Xylem if it has been exposed to nuclear radiation, unless Xylem has been informed and appropriate actions have been agreed upon.

Recycling guidelines

Always follow local laws and regulations regarding recycling.

2 Transportation and Storage

2.1 Examine the delivery

2.1.1 Examine the package

1. Examine the package for damaged or missing items upon delivery.
2. Record any damaged or missing items on the receipt and freight bill.
3. If anything is out of order, then file a claim with the shipping company.

   If the product has been picked up at a distributor, make a claim directly to the distributor.

2.1.2 Examine the unit

1. Remove packing materials from the product.

   Dispose of all packing materials in accordance with local regulations.
2. To determine whether any parts have been damaged or are missing, examine the product.
3. If applicable, unfasten the product by removing any screws, bolts, or straps.

   Use care around nails and straps.
4. If there is any issue, then contact a sales representative.

2.2 Pump lifting

WARNING:

- Assembled units and their components are heavy. Failure to properly lift and support this equipment can result in serious physical injury and/or equipment damage. Lift equipment only at the specifically identified lifting points. Lifting devices such as eyebolts, slings, and spreaders must be rated, selected, and used for the entire load being lifted.
- Crush hazard. The unit and the components can be heavy. Use proper lifting methods and wear steel-toed shoes at all times.

In order to lift the entire pump, use slings placed around the unit as shown.

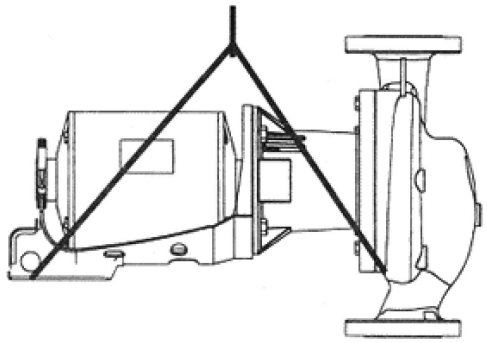

Figure 1: Proper lifting method

2.3 Long-term storage

If the unit is stored for more than 6 months, these requirements apply:

- Store in a covered and dry location.
- Store the unit free from heat, dirt, and vibrations.
- Rotate the shaft by hand several times at least every three months.

For questions about possible long-term storage treatment services, please contact your local sales and service representative.

3 Product Description

3.1 General description

The Series e-60 is an in-line mounted centrifugal pump.

This pump is available for pipe sizes that range from 1 in to 3 inches.

This pump also has available power levels that range from 1/4 to 3 hp and 1750 rpm.

Pump application

WARNING:

This product can expose you to chemicals including Lead, which is known to the State of California to cause cancer and birth defects or other reproductive harm. For more information go to: www.P65Warnings.ca.gov.

You can use this pump for these types of applications:

- Hydronic heating and cooling
- Potable hot water
- Industrial fluid transfer

This pump is for indoor use only.

Xylem recommends that you use bronze constructed pumps for pumping potable water. For other applications, contact your local sales and service representative.

3.2 Operational specifications

Operational limitations

Parameter	Value
Maximum working pressure	175 psi
Pump construction	Bronze fitted or all bronze Standard mechanical seal

Mechanical seal specifications

Materials of Construction	EPR carbon/silicon carbide	EPR SiC/SiC (Graphite loaded)	FKM carbon/silicon carbide
Standard/optional	Standard	Optional	Optional
Operating temperature range	-10˚F to 250˚F (-23˚C to 121˚C)	-10˚F to 250˚F (-23˚C to 121˚C)	-10˚F to 225˚F (-23˚C to 107˚C)
pH range	7.0–11.0	7.0–12.0	7.0–9.0
Maximum glycol/water concentration	50/50%	60/40%	50/50%
Maximum suction pressure	Suction Pressure + TDH must not exceed MWP		

4 Installation

4.1 Preinstallation

Precautions

WARNING:

- When installing in a potentially explosive environment, make sure that the motor is properly certified.
- You must ground (earth) all electrical equipment. This applies to the pump equipment, the driver, and any monitoring equipment. Test the ground (earth) lead to verify that it is connected correctly.

NOTICE:

Supervision by an authorized Xylem representative is recommended to ensure proper installation. Failure to do so may result in equipment damage or decreased performance.

4.1.1 Pump location guidelines

WARNING:

Assembled units and their components are heavy. Failure to properly lift and support this equipment can result in serious physical injury and/or equipment damage. Lift equipment only at the specifically identified lifting points. Lifting devices such as eyebolts, slings, and spreaders must be rated, selected, and used for the entire load being lifted.

CAUTION:

CAUTION: PROPERTY DAMAGE HAZARD. It is not advisable to install circulators in an attic or upper floor over finished living space. If the circulator must be installed over head, or over expensive equipment, provide adequate drainage in the event of leakage. Failure to follow these instructions could result in property damage.

Guideline	Explanation/comment
Keep the pump as close to the liquid source as practically possible.	This minimizes the friction loss and keeps the suction piping as short as possible.
Make sure that the space around the pump is sufficient. Also make sure that you can protect the area below the pump from water damage.	This facilitates ventilation, inspection, maintenance, and service.
If you require lifting equipment such as a hoist or tackle, make sure that there is enough space above the pump.	This makes it easier to properly use the lifting equipment and safely remove and relocate the components to a safe location.
Protect the unit from weather and water damage due to rain, flooding, and freezing temperatures.	This is applicable if nothing else is specified.
Do not install and operate the equipment in closed systems unless the system is constructed with properly-sized safety devices and control devices.	Acceptable devices: • Pressure relief valves • Compression tanks • Pressure controls • Temperature controls • Flow controls If the system does not include these devices, consult the engineer or architect in charge before you operate the pump.

Guideline	Explanation/comment
Take into consideration the occurrence of unwanted noise and vibration.	Vibration can be transmitted to the piping system, which can result in objectionable noise away from the pump.
If the pump location is overhead, undertake special precautions to reduce possible noise transmission.	Consider a consultation with a noise specialist.
When possible, locate the pump below the fluid level.	This facilitates priming, ensures a steady flow of liquid, and provides a positive suction head on the pump.

4.1.2 Piping checklist

The code for pressure piping, ANSI B31.1, lists types of supports available for various applications.

WARNING:

- The heating of water and other fluids causes volumetric expansion. The associated forces can cause the failure of system components and the release of high-temperature fluids. In order to prevent this, install properly sized and located compression tanks and pressure-relief valves. Failure to follow these instructions can result in serious personal injury or death, or property damage.
- Avoid serious personal injury and property damage. Make sure that the flange bolts are adequately torqued.

NOTICE:

Never force piping to make a connection with a pump.

Check	Explanation/comment	Checked
Check that the pump is not supported by placing hangers or floor supports on the motor.	Shaft misalignment and subsequent premature coupling and bearing wear will result if motor is improperly supported.	
Check that a section of straight pipe, with a length that is five times its diameter, is installed between the suction side of the pump and the first elbow, or that a B&G Suction Diffuser is installed.	This reduces suction turbulence by straightening the flow of liquid before it enters the pump. The length of the pipe must be equal to five times the diameter of the suction pipe size	
Check that the suction and discharge pipes are supported independently by use of pipe hangers near the pump.	This eliminates pipe strain on the pump.	
Check that there is a strong, rigid support for the suction and discharge lines.	As a rule, ordinary wire or band hangers are not adequate to maintain proper alignment.	
For pumps with flanges, check that the bolt holes in the pump flanges match the bolt holes in the pipe flanges.	—	
Check that the suction or discharge lines are not forced into position.	Coupling and bearing wear will result if suction or discharge lines are forced into position.	
Check that fittings for absorbing expansion are installed in the system when considerable temperature changes are expected.	This helps to avoid strain on the pump.	

Check	Explanation/comment	Checked
Check that you have a foot valve of equal or greater area than the pump suction piping when you use in an open system with a suction lift.	Prevent clogging by using a strainer at the suction inlet next to the foot valve. Make sure that the strainer has an area three times that of the suction pipe with a mesh hole diameter of no less than 0.25 in. (0.64 cm).	
Check that a B&G Triple Duty® valve is installed in the discharge line.	This valve serves as a check valve that protects the pump from water hammer, and serves as an isolation valve for servicing and for throttling.	
Check that the pipeline has isolation valves around the pump and has a drain valve in the suction pipe.	—	
Use PTFE tape sealer or a high quality thread sealant when you install the suction and discharge connections to a threaded pump housing.	—	
On an open system, check that the end of the suction pipe is at least 3 ft. below the surface of the water in the suction well.	This prevents air from being drawn into the pump. Avoid air pockets in the suction line and make sure that each section of the suction pipe is air tight.	
Check that new flange gaskets are installed between the flanges of the pump body end suction and discharge pipes. Make sure that these gaskets are clean and grease-free.	Suitable fasteners for this connection are supplied in the Xylem fastener pack. Apply a torque of 8 to 11 ft. lbs (11 to 15 Nm) to each of the flange bolts. Both the suction and discharge flanges must be torqued to the same level.	

4.1.3 Pump orientation

You can install this pump to discharge up, down, left, or right. However, make sure that you install the pump according to these pump orientation guidelines:

- Reposition the pump body by removing the body bolts and rotating the body around the bearing assembly.
- Only install the pump with the motor shaft horizontal.
- The bearing assembly vent slots or coupler access window must always face up.
- Do not reposition the motor on the bearing assembly.
- The arrow on the pump body must point in the direction of the flow.

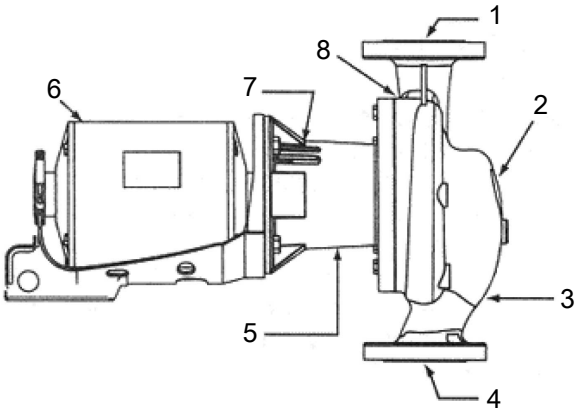

1. Discharge
2. Body
3. Direction of flow arrow
4. Suction
5. Bearing assembly
6. Motor

7. Vent slots
8. Rotation arrow

Figure 2: Bearing assembly with vent slots facing up

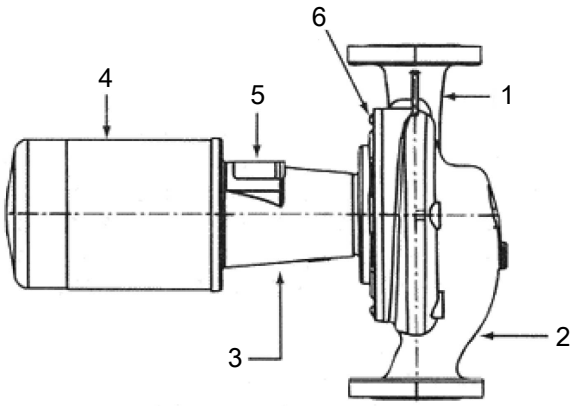

1. Body
2. Direction of flow arrow
3. Bearing assembly
4. Motor
5. Coupler access window
6. Coverplate

Figure 3: Bearing assembly with coupler access window facing up

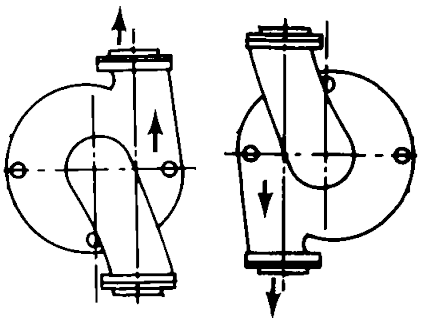

Figure 4: Vertical mode of discharge

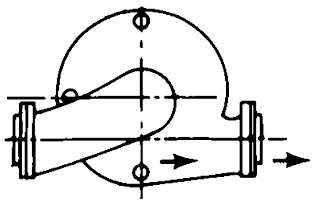

Figure 5: Horizontal mode of discharge

4.1.4 Special installation

Installation with suction diffuser and triple-duty valve

Do not install and operate triple-duty valves and suction diffusers in closed systems unless the system is designed with these safety and control devices:

- Pressure relief valves
- Compression tanks
- Pressure controlling equipment
- Temperature controlling equipment
- Flow controlling equipment

Check that the control and safety devices have these characteristics:

- Properly sized for their purpose
- Placed correctly in the system before putting the system into operation

4.2 Connect the wiring

WARNING:

- Disconnect and lock out electrical power before installing or servicing the unit.
- Motors without built-in protection must be provided with contactors and thermal overload protection for single-phase motors, or starters with heaters for three-phase motors. (See the nameplate on the drive unit to select properly-sized overloads.)

Electrical Hazard:

Make sure that all connections are secure and the conduit box cover is closed before you connect the electrical power.

1. Remove the screws that secure the conduit box cover.
2. Lift off the cover.
3. Attach the appropriately sized connector to the hole in the side of the conduit box.

4.2.1 Wiring diagrams

These wiring diagrams are typical and might not be representative for all motor types. Refer to the motor or motor nameplate for specific diagrams.

Single-phase motors

Single-phase motors are protected with inherent overheating devices and do not require external overload protection.

Single-phase motors can operate at either a low voltage (115 V) or a high voltage (230 V). Choose the voltage at which you want to operate your pump and make the wiring connections according to these diagrams:

Standard		For 1 hp, 1 phase motors only	
Low Voltage		Low Voltage	
Version 1	Version 2	Version 1	Version 2
5 — BR L2 — 4 — W, BL L1 — 1 6	7P2 — B T3 — C — L1 D — L2 E	L2 — 1 2 — R, BR L1 — 4 — BL, W 5 6	7P2 — B T3 — C — L1 D — L2 E
High Voltage		High Voltage	
Version 1	Version 2	Version 1	Version 2
5 — W L2 — 4 — BL L1 — 1 6 — BR	T3 — B C — L1 D — L2 7P2 — E	L2 — 1 2 — R, W L1 — 4 — BL 5 6 — BR	T3 — B C — L1 D — L2 7P2 — E

BR = Brown

W = White

BL = Black

R =Red

T3 = Orange

7P2 = Brown

Three-phase motors

Three-phase motors can operate at either a low voltage (208 to 230 V) or at a high voltage (460 V). Choose the voltage at which you want to operate your pump and make the wiring connections according to this diagram:

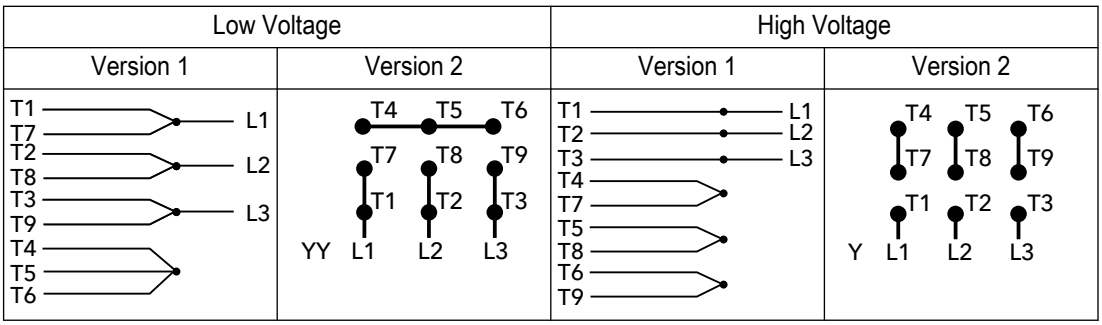

T1 = Blue

T2 = White

T3 = Orange

T4 = Yellow

T5 = Black

T6 = Gray

T7 = Pink

T8 = Red

T9 = Brick Red

Interchange any two line wires to reverse the rotation.

5 Commissioning, Startup, Operation, and Shutdown

5.1 Preparation for startup

WARNING:

- Failure to follow these precautions before you start the unit will lead to serious personal injury and equipment failure.
- Explosion hazard. Do not short battery terminals together or damage the battery.
- Do not operate the pump below the minimum rated flows or with the suction or discharge valves closed. These conditions can create an explosive hazard due to vaporization of pumped fluid and can quickly lead to pump failure and physical injury.
- If the pump, motor, or piping operate at extremely high or low temperatures, then guarding or insulation is required. Failure to follow these instructions can result in serious personal injury or death, and property damage.
- Always disconnect and lock out power to the driver before you perform any installation or maintenance tasks. Failure to disconnect and lock out driver power will result in serious physical injury.
- Operating the pump in reverse rotation can result in the contact of metal parts, heat generation, and breach of containment.

NOTICE:

- Verify the driver settings before you start any pump.
- Make sure that the warm-up rate does not exceed 2.5°F (1.4°C) per minute.

You must follow these precautions before you start the pump:

- Flush and clear the system thoroughly to remove dirt or debris in the pipe system in order to prevent premature failure at initial startup.
- Bring variable-speed drivers to the rated speed as quickly as possible.
- If temperatures of the pumped fluid will exceed 200°F (93°C), then warm up the pump prior to operation. Circulate a small amount of fluid through the pump until the casing temperature is within 100°F (38°C) of the fluid temperature.

At initial startup, do not adjust the variable-speed drivers or check for speed governor or over-speed trip settings while the variable-speed driver is coupled to the pump. If the settings have not been verified, then uncouple the unit and refer to instructions supplied by the driver manufacturer.

5.1.1 Check the rotation

WARNING:

- Operating the pump in reverse rotation can result in the contact of metal parts, heat generation, and breach of containment.
- Always disconnect and lock out power to the driver before you perform any installation or maintenance tasks. Failure to disconnect and lock out driver power will result in serious physical injury.

1. Unlock power to the driver.
2. Make sure that everyone is clear, and then jog the driver long enough to determine that the direction of rotation corresponds to the arrow on the pump.

Pump rotation is clockwise when viewed from the back of the motor. An arrow is provided to show rotational direction.

3. Lock out power to the driver.

5.2 Lubrication requirements

These pumps are permanently lubricated.

5.3 Prime the pump

CAUTION:

Do not run the pump dry.

Make sure that the pump body is full of liquid before startup. If the system does not automatically fill the pump body with liquid, then you must manually prime the pump.

1. Loosen the vent plugs on the pump body.
2. While venting the air from the pump body, rotate the pump shaft a few times by hand.
3. After all air has been purged from the pump, close the vent plugs.

5.4 Start the pump

WARNING:

Pressurize the pump body slowly while you check for leaks at all joints with gaskets. Failure to follow these instructions can result in serious personal injury and/or property damage.

CAUTION:

- Observe the pump for vibration levels, bearing temperature, and excessive noise. If normal levels are exceeded, shut down the pump and resolve the issue.

Before you start the pump, you must perform these tasks:

- Open the suction valve.
- Open any recirculation or cooling lines.

1. Fully close or partially open the discharge valve, depending on system conditions.
2. Start the driver.
3. Slowly open the discharge valve until the pump reaches the desired flow.
4. Immediately check the pressure gauge to ensure that the pump quickly reaches the correct discharge pressure.
5. If the pump fails to reach the correct pressure, perform these steps:
   a) Stop the driver.
   b) Restart the driver.
6. Monitor the pump while it is operating:
   a) Check the pump for bearing temperature, excessive vibration, and noise.
   b) If the pump exceeds normal levels, then shut down the pump immediately and correct the problem.
7. Repeat steps 5 and 6 until the pump runs properly.

5.5 Pump operation precautions

General considerations

CAUTION:

- Vary the capacity with the regulating valve in the discharge line. Never throttle the flow from the suction side since this can result in decreased performance, unexpected heat generation, and equipment damage.
- Do not overload the driver. Driver overload can result in unexpected heat generation and equipment damage. The driver can overload in these circumstances:
  - The specific gravity of the pumped fluid is greater than expected.
  - The pumped fluid exceeds the rated flow rate.
- Make sure to operate the pump at or near the rated conditions. Failure to do so can result in pump damage from cavitation or recirculation.

Operation at reduced capacity

WARNING:

Never operate any pumping system with a blocked suction and discharge. Operation, even for a brief period under these conditions, can cause confined pumped fluid to overheat, which results in a violent explosion. You must take all necessary measures to avoid this condition.

CAUTION:

Avoid excessive vibration levels. Excessive vibration levels can damage the bearings, stuffing box or seal chamber, and the mechanical seal, which can result in decreased performance.

NOTICE:

- Avoid increased radial load. Failure to do so can cause stress on the shaft and bearings.
- Avoid heat build-up. Failure to do so can cause rotating parts to score or seize.
- Avoid cavitation. Failure to do so can cause damage to the internal surfaces of the pump.

Operation under freezing conditions

NOTICE:

Do not expose an idle pump to freezing conditions. Drain all liquid that is inside the pump and the cooling coils. Failure to do so can cause liquid to freeze and damage the pump.

5.6 Shut down the pump

1. Slowly close the discharge valve.
2. Shut down and lock the driver to prevent accidental rotation.

6 Maintenance

6.1 Disassembly

6.1.1 Disassembly precautions

This manual clearly identifies accepted methods for disassembling units. These methods must be adhered to.

WARNING:

- Make sure that the pump is isolated from the system and that pressure is relieved before you disassemble the pump, remove plugs, open vent or drain valves, or disconnect the piping.
- Always disconnect and lock out power to the driver before you perform any installation or maintenance tasks. Failure to disconnect and lock out driver power will result in serious physical injury.
- Crush hazard. The unit and the components can be heavy. Use proper lifting methods and wear steel-toed shoes at all times.
- After you disassemble a gasket joint, always use a new gasket upon reassembly. Never reuse old gaskets. Failure to follow these instructions can result in serious personal injury, death, and/or property damage.

NOTICE:

Make sure that all replacement parts are available before you disassemble the pump for overhaul.

6.1.2 Drain the pump

CAUTION:

- Allow all system and pump components to cool before you handle them to prevent physical injury.

1. Close the isolation valves on the suction and discharge sides of the pump.

   You must drain the system if no valves are installed.
2. Open the drain valve and the pump body vent.

   Do not proceed until liquid stops coming out of the drain valve. If liquid continues to flow from the drain valve, the isolation valves are not sealing properly and you must repair them before you proceed.
3. Leave the drain valve open.

   Do not close the drain valve until the reassembly is complete.
4. Drain the liquid from the piping and flush the pump if it is necessary.
5. Disconnect all auxiliary piping and tubing.

6.1.3 Remove the motor and coupler

WARNING:

- Disconnect and lock out electrical power before installing or servicing the unit.
- Always disconnect and lock out power to the driver before you perform any installation or maintenance tasks. Failure to disconnect and lock out driver power will result in serious physical injury.

1. Turn off and lock out power to the motor.
2. Remove the conduit box cover.

3. Disconnect the power leads from the motor leads.
4. Remove the conduit and power leads from the conduit box.
5. Support the motor and then remove the four screws that hold the motor to the bearing assembly.
6. On pumps with spring type couplers, remove the motor side coupler half from the motor shaft.
7. Pull the motor off of the bearing assembly.
8. Remove the coupler:

If your coupler type is...	Then...
Spring	Almost completely back out the coupler setscrews and then slide the pump-side coupler half off of the pump shaft.
Elastomeric	Loosen the coupler setscrews and remove the coupler halves from the pump and motor shafts.

6.1.4 Remove the bearing assembly and impeller

WARNING:

Pressure might be present in the pump body. You can relieve this pressure by loosening the eight volute capscrews and shifting the bearing assembly slightly in order to allow the pressurized water to escape. Failure to follow these instructions can result in serious personal injury or death.

1. Remove the eight capscrews that hold the bearing assembly or adapter ring to the volute.
2. Remove the bearing assembly.
3. Insert a long punch between the impeller vanes or grasp the impeller with a strap wrench in order to prevent the impeller from turning.
4. Remove the impeller nut, lockwasher, impeller, and adapter ring.
5. Remove these items from the bearing assembly:

If your bearing assembly is...	Then...
Cast iron	1. Remove all of the seal parts and the coverplate. 2. Remove the seat and seat gasket from the coverplate. 3. Remove the three screws that hold the bearing cap in place.
Aluminum	Remove the two bearing-holder retaining screws that are located at the bottom of the coupler cavity.

6. Pull the shaft assembly from the bearing bracket.

   If necessary, strike the coupler end of the shaft with a soft-faced hammer in order to remove the assembly.
7. Pull the wave spring out of the rear bearing bore.

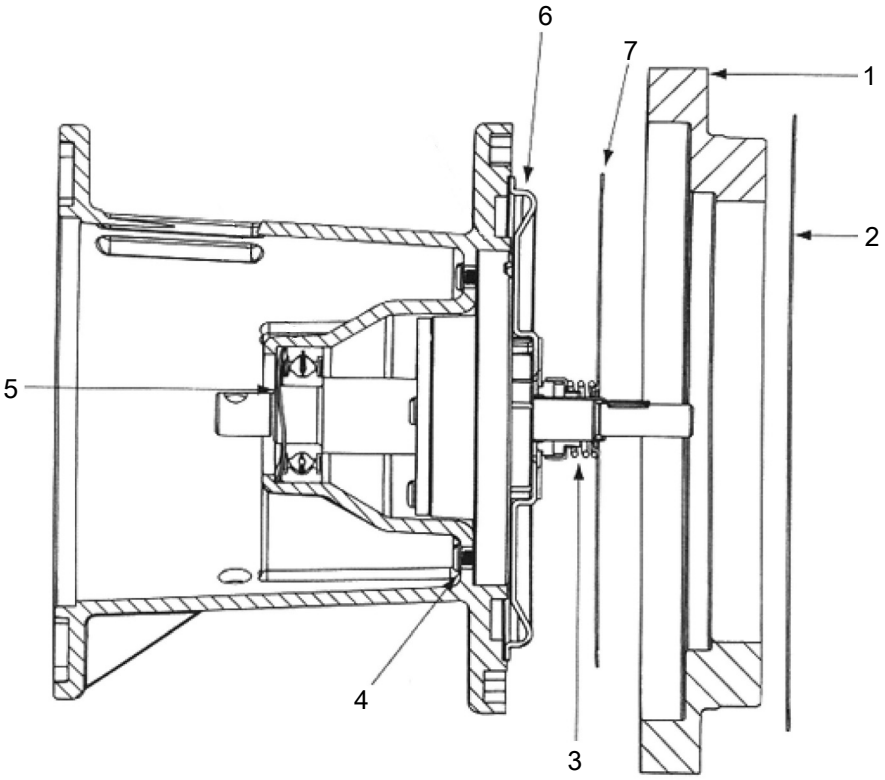

1. Adapter ring used in 2 x 2 x 6.25 and 1.5 x 1.5 x 6.25 pumps	5. Wave spring
2. Gasket used on 2 x 2 x 6.25 and 1.5 x 1.5 x 6.25 pumps	6. Faceplate
3. Seal assembly	7. Gasket
4. Retaining screws	—

Figure 6: Small bearing assembly

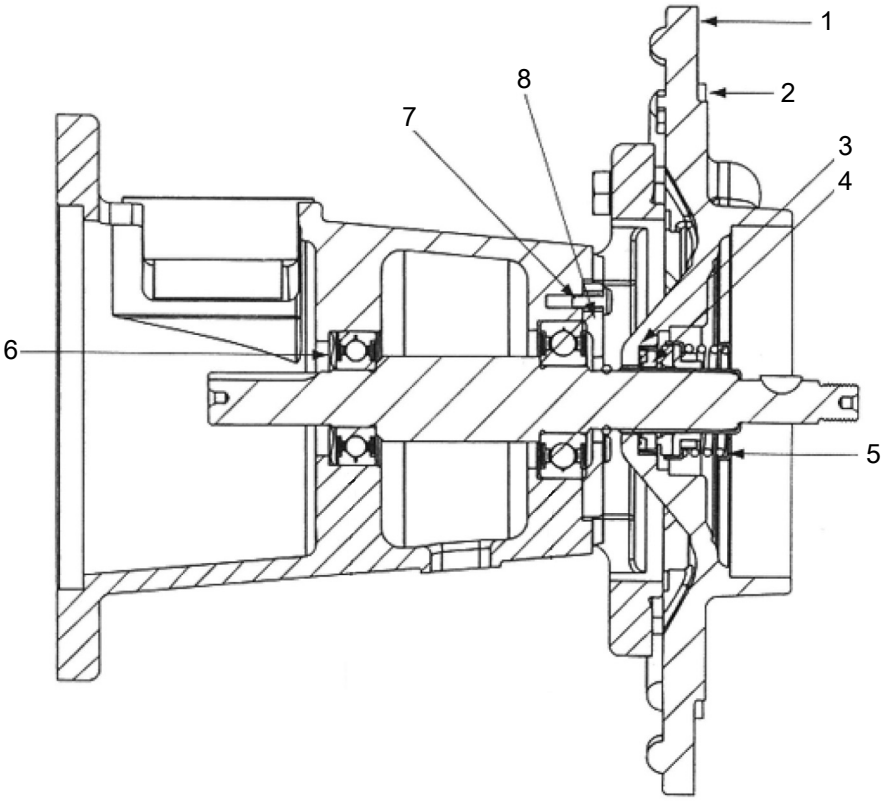

1. Coverplate	5. Seal assembly
2. Gasket	6. Wave spring
3. Seat gasket	7. Retaining screws
4. Seat	8. Bearing cap

Figure 7: Large bearing assembly

6.1.5 Remove the seal

1. Remove the spring retainer and seal spring.
2. Pry the compression ring off the seal boot.
3. Insert a standard screwdriver under the seal head and carefully pry the seal head off the shaft.

   Do not scratch the shaft sleeve.
4. Use a small screwdriver in order to loosen and remove the seal seat and gasket.
5. If the seat retainer is in good condition, leave it in the faceplate. If it is in bad condition, pry it out and replace it with the new one provided in the seal kit.

6.2 Pre-assembly inspections

Guidelines

Before you assemble the pump parts, make sure you follow these guidelines:

- Inspect the pump parts according to the information in these pre-assembly topics before you reassemble your pump. Replace any part that does not meet the required criteria.
- Make sure that the parts are clean. Clean the pump parts in solvent in order to remove oil, grease, and dirt.

NOTICE:

Protect machined surfaces while you clean the parts. Failure to do so may result in equipment damage.

6.2.1 Replacement guidelines

Impeller replacement

This table shows the criteria for replacing the impeller:

Impeller parts	When to replace
Impeller vanes	• When grooved deeper than 1/16 in. (1.6 mm), or • When worn evenly more than 1/32 in. (0.8 mm)
Vane edges	When you see cracks, pitting, or corrosion damage

Gaskets, O-rings, and seats replacement

- Replace all gaskets and O-rings at each overhaul and disassembly.
- Inspect the seats. They must be smooth and free of physical defects.
- Replace parts if the seats are defective.

6.3 Reassembly

6.3.1 Reinstall the seal

1. Clean the shaft sleeve and seal seat recess.

   You can use crocus cloth in order to polish the sleeve. Do not scratch or gouge the recess or sleeve.
2. Install the seat gasket, seat, and retainer (if used) into the seal recess in the faceplate or coverplate.
3. Lubricate the inside diameter of the seal head with soapy water and then slide the complete seal head over the shaft.
4. Slide the seal head assembly on until the carbon ring contacts the seat.
5. Use the flat face of a screwdriver and firmly press on the top of the edge of the compression ring at several locations in order to make sure that the seal head sits flat against the seat.

6.3.2 Reinstall the bearing assembly and impeller

WARNING:

Whenever the bearing assembly is removed from the pump, use a new gasket when you reinstall. Failure to follow these instructions can result in serious personal injury or property damage.

1. Wipe the bearing bores clean and remove any rust or scale deposits with a fine emery cloth.
2. Insert the new wave spring into the rear bearing bore.
3. Lubricate the OD of the rear bearing with grease:
   - On shaft assemblies that go into aluminum housings, lubricate the OD of the bearing holder, not the faceplate.
   - On shaft assemblies that go into cast iron housings, lubricate the OD of the front bearing.
4. Insert the shaft assembly into the housing and then install and tighten the retaining screws.
5. For cast iron bearing assemblies, install the coverplate on the housing.
6. If used, install the adapter ring and gasket on the new bearing assembly.

7. Install the impeller on the new bearing assembly and use the new impeller nut and lockwasher provided with the new bearing assembly.
8. Insert a long punch between the impeller vanes or grasp the impeller with a strap wrench to prevent the impeller from turning.
9. Torque the impeller nut to 96 to 144 lb-in. for nuts used on 3/8 in. fine threaded shafts or 204 to 264 lb-in. for nuts used on 7/16 in. fine threaded shafts.
10. Clean the old body gasket from the volute.
11. Put a new body gasket on the bearing assembly and then install the assembly on the pump body.
12. Install the eight volute capscrews and tighten them according to the torque specifications in the Capscrew torque values table.

6.3.3 Reinstall the spring type coupler and motor

1. Install the new coupler on the pump shaft.
2. Make sure that the coupler setscrew is seated in the shaft dimple.
3. Lift the motor into position and attach the motor side coupler half.

   Make sure that the coupler setscrew is seated in the shaft dimple.
4. Support the motor and then install the four screws that hold the motor to the bearing assembly.
5. Attach the conduit and power leads to the conduit box.
6. Connect the power leads to the motor leads.
7. Replace the conduit box cover.
8. Check for proper motor rotation. The proper rotation is clockwise when viewed from the back of the motor.

6.3.4 Reinstall the elastomeric type coupler and motor

1. Position the coupler half on the pump shaft:

If your pump shaft...	Then...
Contains a dimple	Locate the coupler half on the shaft so that a coupler setscrew is positioned over the dimple. Tighten the setscrew so that it seats in the dimple. Tighten the other setscrew if there is one.
Is keyed and uses a size 3J coupler	Slide the coupler half on the shaft. Do not tighten the setscrew.
Is keyed and uses a size 4J coupler	Slide the coupler half onto the shaft so that the shaft end extends 0.25 in. (0.64 cm) past the coupler half flange face. Tighten the setscrews.
Is keyed and uses a size 5J coupler	Slide the coupler half onto the shaft so that the shaft end is flush with the coupler half flange face. Tighten the setscrews.

2. Position the coupler half on the motor shaft:

If...	Then...
The motor shaft contain a dimple	Locate the coupler half on the shaft so that a coupler setscrew is positioned over the dimple. Tighten the setscrew and make sure it seats in the dimple. Tighten the other setscrew if there is one.
The motor shaft is keyed	Slide the coupler half onto the motor shaft. Do not tighten the setscrews.

3. Place the new insert in the pump side coupler half.
4. Lift the motor into position, align the insert and motor coupler half, and then bolt the motor in place.
5. Slide the coupler over the insert:

If...	Then...
The motor and pump shafts both contain a dimple	Proceed to the next step.

If...	Then...
The motor shaft contains a dimple and the pump shaft is keyed	1. Use a screwdriver to slide the pump side coupler over the insert as far as possible. 2. Gap the coupler by sliding the pump coupler half back 1/16 in. 3. Tighten the setscrews
The motor shaft is keyed and the pump shaft is either dimpled or keyed	1. Use a screwdriver to slide the motor side coupler over the insert as far as possible. 2. Gap the coupler by sliding the motor coupler half back 1/16 in. 3. Tighten the setscrews

When an elastomeric type coupler is used with a keyed pump and/or motor shaft, do not leave the insert compressed between the coupler halves. There must be a gap between the ends of the insert and the coupler flanges to accommodate shaft expansion and contraction. If the insert is not gapped, the pump and motor bearings are subjected to excessive loads, which leads to premature failure. However, it is possible to have too large a gap. The gap is considered excessive when the insert teeth are not completely engaged in the coupler halves.

6. Insert the conduit and power leads on the conduit box.
7. Connect the power leads to the motor leads.
8. Install the conduit box cover.
9. Check that the motor rotation is clockwise when viewed from the back of the motor.
10. Fill and bleed the system and then check for leaks.

WARNING:

– Pressurize the pump body slowly while you check for leaks at all joints with gaskets. Failure to follow these instructions can result in serious personal injury or property damage.

6.3.5 Capscrew torque values

Capscrew torque in ft-lbs (Nm)

Capscrew type	Head marking	1/4 in.	5/16 in.	3/8 in.	7/16 in.	1/2 in.	5/8 in.	3/4 in.	7/8 in.	1 in.
SAE grade 2		6 (8)	13 (18)	25 (34)	38 (52)	60 (81)	120 (163)	190 (258)	210 (285)	300 (407)
Brass or stainless steel	or	4 (5)	10 (14)	17 (23)	27 (37)	42 (57)	83 (113)	130 (176)	200 (271)	300 (407)
SAE grade 5		10 (14)	20 (27)	35 (47)	60 (81)	90 (122)	180 (244)	325 (441)	525 (712)	800 (1085)

6.3.6 Dealer servicing

If trouble occurs that cannot be rectified, contact your local sales and service representative and be prepared to provide this information:

1. Complete nameplate data of pump and motor
2. Suction and discharge pipe pressure gauge readings
3. Ampere draw of the motor
4. A sketch of the pump hook-up and piping

7 Parts Listings and Cross-Sectional Drawings

7.1 Cross-sectional drawings

Pump body for sizes 1 x 5.25, 1.25 x 5.25, 1.5 x 5.25, 2 x 5.25, 3 x 5.25, 1.5 x 6.25, and 2 x 6.25

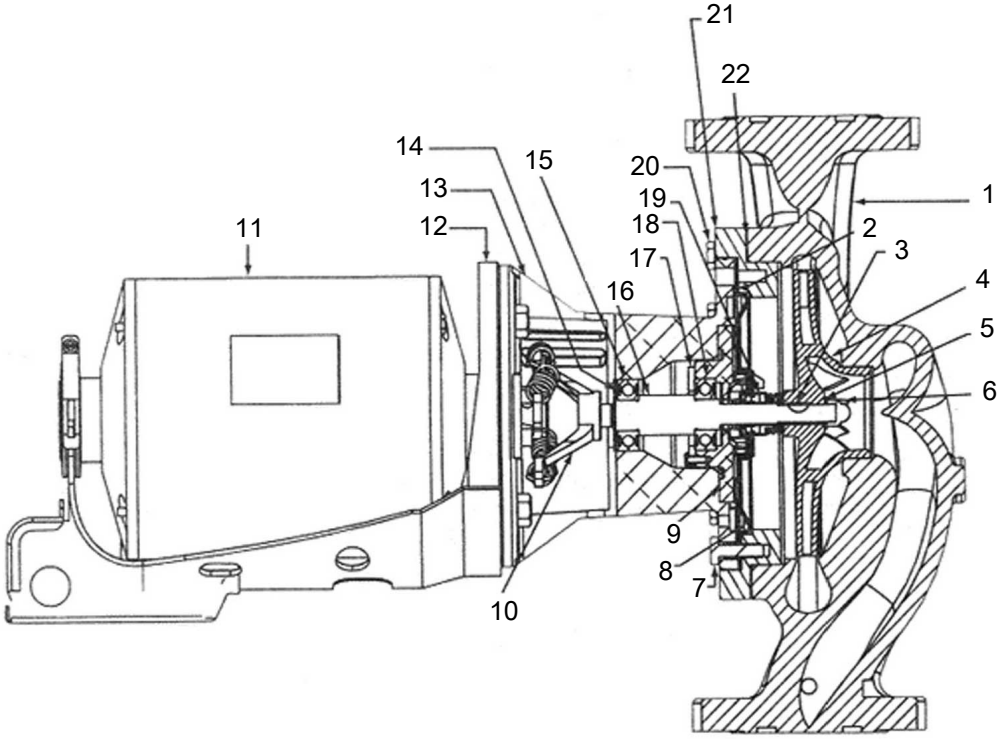

1. Volute	12. Motor bracket
2. Gasket	13. Bearing housing
3. Key	14. Wave spring
4. Impeller	15. Rear spring
5. Impeller lockwasher	16. Shaft
6. Impeller nut	17. Bearing retainer
7. Adapter ring capscrew	18. Front bearing
8. Faceplate	19. Seal assembly
9. Front bearing holder	20. Volute capscrew
10. Spring coupler	21. Adapter ring, on 2 x 6.25 and 1.5 x 6.25 pumps only
11. Motor	22. Adapter ring gasket

Pump body for sizes 1.5 x 7 and 2 x 7

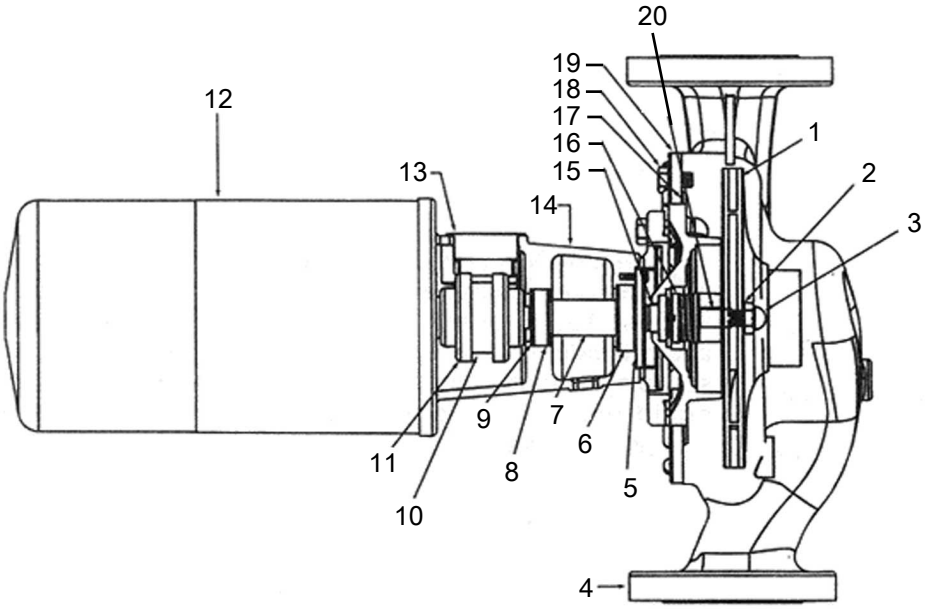

1. Impeller	11. Coupler
2. Impeller lockwasher	12. Motor
3. Impeller nut	13. Coupler cover
4. Volute	14. Bearing housing
5. Bearing retainer	15. Shaft sleeve
6. Front bearing	16. Seal assembly
7. Shaft	17. Volute gasket
8. Rear bearing	18. Volute capscrew
9. Wave spring	19. Coverplate
10. Coupler elastomeric insert	20. Key

Seal assembly

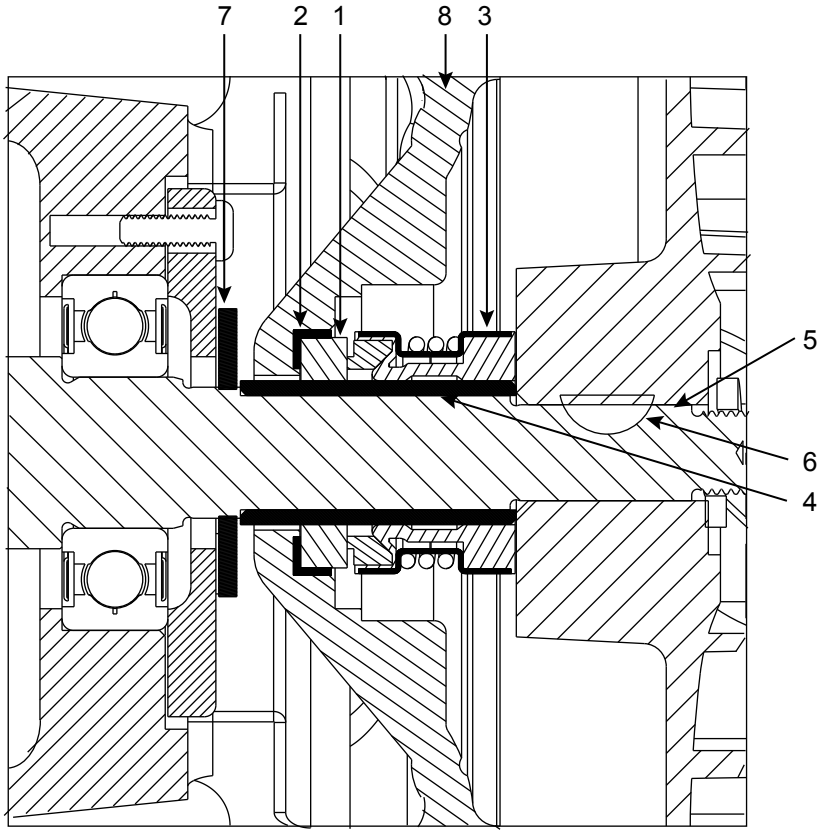

Figure 8: 3/4” seal assembly

1. Seal seat
2. Seat gasket (cup)
3. Seal head
4. Shaft sleeve
5. Shaft
6. Key
7. Slinger
8. Coverplate

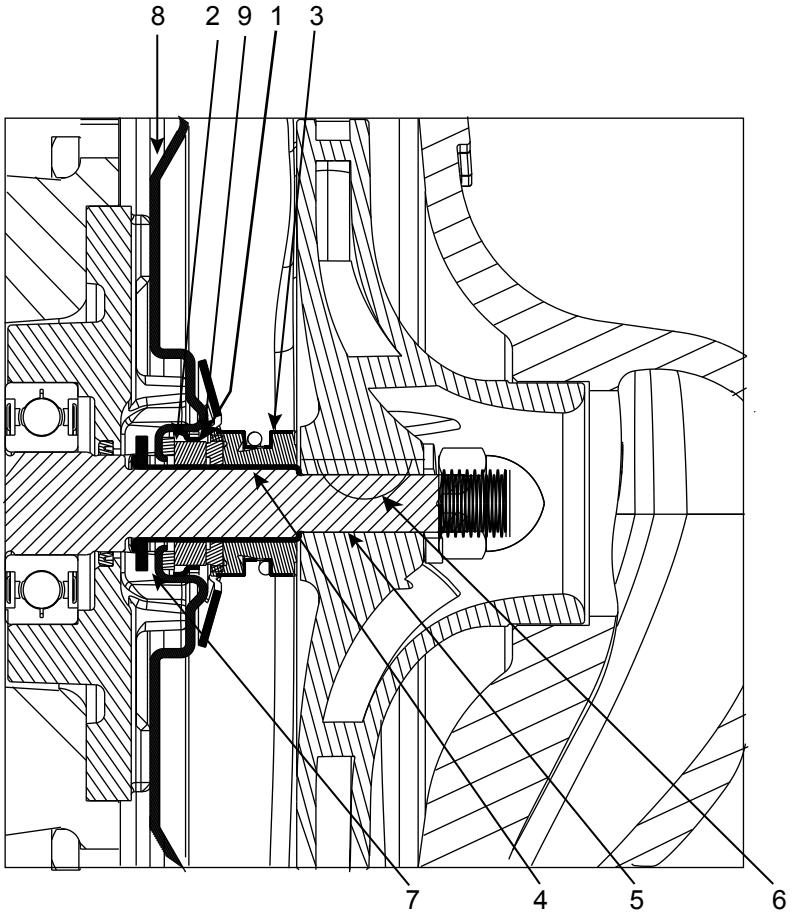

Figure 9: 1/2” seal assembly

1. Seal seat
2. Seat gasket
3. Seal head
4. Shaft sleeve
5. Shaft
6. Key
7. Slinger
8. Coverplate
9. Seat retainer

8 Product Warranty

Commercial warranty

Warranty. For goods sold to commercial buyers, Seller warrants the goods sold to Buyer hereunder (with the exception of membranes, seals, gaskets, elastomer materials, coatings and other "wear parts" or consumables all of which are not warranted except as otherwise provided in the quotation or sales form) will be (i) be built in accordance with the specifications referred to in the quotation or sales form, if such specifications are expressly made a part of this Agreement, and (ii) free from defects in material and workmanship for a period of one (1) year from the date of installation or eighteen (18) months from the date of shipment (which date of shipment shall not be greater than thirty (30) days after receipt of notice that the goods are ready to ship), whichever shall occur first, unless a longer period is specified in the product documentation (the “Warranty”).

Except as otherwise required by law, Seller shall, at its option and at no cost to Buyer, either repair or replace any product which fails to conform with the Warranty provided Buyer gives written notice to Seller of any defects in material or workmanship within ten (10) days of the date when any defects or non-conformance are first manifest. Under either repair or replacement option, Seller shall not be obligated to remove or pay for the removal of the defective product or install or pay for the installation of the replaced or repaired product and Buyer shall be responsible for all other costs, including, but not limited to, service costs, shipping fees and expenses. Seller shall have sole discretion as to the method or means of repair or replacement. Buyer’s failure to comply with Seller’s repair or replacement directions shall terminate Seller’s obligations under this Warranty and render the Warranty void. Any parts repaired or replaced under the Warranty are warranted only for the balance of the warranty period on the parts that were repaired or replaced. Seller shall have no warranty obligations to Buyer with respect to any product or parts of a product that have been: (a) repaired by third parties other than Seller or without Seller’s written approval; (b) subject to misuse, misapplication, neglect, alteration, accident, or physical damage; (c) used in a manner contrary to Seller’s instructions for installation, operation and maintenance; (d) damaged from ordinary wear and tear, corrosion, or chemical attack; (e) damaged due to abnormal conditions, vibration, failure to properly prime, or operation without flow; (f) damaged due to a defective power supply or improper electrical protection; or (g) damaged resulting from the use of accessory equipment not sold or approved by Seller. In any case of products not manufactured by Seller, there is no warranty from Seller; however, Seller will extend to Buyer any warranty received from Seller’s supplier of such products.

THE FOREGOING WARRANTY IS EXCLUSIVE AND IN LIEU OF ANY AND ALL OTHER EXPRESS OR IMPLIED WARRANTIES, GUARANTEES, CONDITIONS OR TERMS OF WHATEVER NATURE RELATING TO THE GOODS PROVIDED HEREUNDER, INCLUDING WITHOUT LIMITATION ANY IMPLIED WARRANTIES OF MERCHANTABILITY AND FITNESS FOR A PARTICULAR PURPOSE, WHICH ARE HEREBY EXPRESSLY DISCLAIMED AND EXCLUDED. EXCEPT AS OTHERWISE REQUIRED BY LAW, BUYER’S EXCLUSIVE REMEDY AND SELLER’S AGGREGATE LIABILITY FOR BREACH OF ANY OF THE FOREGOING WARRANTIES ARE LIMITED TO REPAIRING OR REPLACING THE PRODUCT AND SHALL IN ALL CASES BE LIMITED TO THE AMOUNT PAID BY THE BUYER FOR THE DEFECTIVE PRODUCT. IN NO EVENT SHALL SELLER BE LIABLE FOR ANY OTHER FORM OF DAMAGES, WHETHER DIRECT, INDIRECT, LIQUIDATED, INCIDENTAL, CONSEQUENTIAL, PUNITIVE, EXEMPLARY OR SPECIAL DAMAGES, INCLUDING BUT NOT LIMITED TO LOSS OF PROFIT, LOSS OF ANTICIPATED SAVINGS OR REVENUE, LOSS OF INCOME, LOSS OF BUSINESS, LOSS OF PRODUCTION, LOSS OF OPPORTUNITY OR LOSS OF REPUTATION.

Limited consumer warranty

Warranty. For goods sold for personal, family or household purposes, Seller warrants the goods purchased hereunder (with the exception of membranes, seals, gaskets, elastomer

materials, coatings and other "wear parts" or consumables all of which are not warranted except as otherwise provided in the quotation or sales form) will be free from defects in material and workmanship for a period of one (1) year from the date of installation or eighteen (18) months from the product date code, whichever shall occur first, unless a longer period is provided by law or is specified in the product documentation (the “Warranty”).

Except as otherwise required by law, Seller shall, at its option and at no cost to Buyer, either repair or replace any product which fails to conform with the Warranty provided Buyer gives written notice to Seller of any defects in material or workmanship within ten (10) days of the date when any defects or non-conformance are first manifest. Under either repair or replacement option, Seller shall not be obligated to remove or pay for the removal of the defective product or install or pay for the installation of the replaced or repaired product and Buyer shall be responsible for all other costs, including, but not limited to, service costs, shipping fees and expenses. Seller shall have sole discretion as to the method or means of repair or replacement. Buyer’s failure to comply with Seller’s repair or replacement directions shall terminate Seller’s obligations under this Warranty and render this Warranty void. Any parts repaired or replaced under the Warranty are warranted only for the balance of the warranty period on the parts that were repaired or replaced. The Warranty is conditioned on Buyer giving written notice to Seller of any defects in material or workmanship of warranted goods within ten (10) days of the date when any defects are first manifest.

Seller shall have no warranty obligations to Buyer with respect to any product or parts of a product that have been: (a) repaired by third parties other than Seller or without Seller’s written approval; (b) subject to misuse, misapplication, neglect, alteration, accident, or physical damage; (c) used in a manner contrary to Seller’s instructions for installation, operation and maintenance; (d) damaged from ordinary wear and tear, corrosion, or chemical attack; (e) damaged due to abnormal conditions, vibration, failure to properly prime, or operation without flow; (f) damaged due to a defective power supply or improper electrical protection; or (g) damaged resulting from the use of accessory equipment not sold or approved by Seller. In any case of products not manufactured by Seller, there is no warranty from Seller; however, Seller will extend to Buyer any warranty received from Seller’s supplier of such products.

THE FOREGOING WARRANTY IS PROVIDED IN PLACE OF ALL OTHER EXPRESS WARRANTIES. ALL IMPLIED WARRANTIES, INCLUDING BUT NOT LIMITED TO THE IMPLIED WARRANTIES OF MERCHANTABILITY AND FITNESS FOR A PARTICULAR PURPOSE, ARE LIMITED TO ONE (1) YEAR FROM THE DATE OF INSTALLATION OR EIGHTEEN (18) MONTHS FROM THE PRODUCT DATE CODE , WHICHEVER SHALL OCCUR FIRST. EXCEPT AS OTHERWISE REQUIRED BY LAW, BUYER’S EXCLUSIVE REMEDY AND SELLER’S AGGREGATE LIABILITY FOR BREACH OF ANY OF THE FOREGOING WARRANTIES ARE LIMITED TO REPAIRING OR REPLACING THE PRODUCT AND SHALL IN ALL CASES BE LIMITED TO THE AMOUNT PAID BY THE BUYER FOR THE DEFECTIVE PRODUCT. IN NO EVENT SHALL SELLER BE LIABLE FOR ANY OTHER FORM OF DAMAGES, WHETHER DIRECT, INDIRECT, LIQUIDATED, INCIDENTAL, CONSEQUENTIAL, PUNITIVE, EXEMPLARY OR SPECIAL DAMAGES, INCLUDING BUT NOT LIMITED TO LOSS OF PROFIT, LOSS OF ANTICIPATED SAVINGS OR REVENUE, LOSS OF INCOME, LOSS OF BUSINESS, LOSS OF PRODUCTION, LOSS OF OPPORTUNITY OR LOSS OF REPUTATION.

Some states do not allow limitations on how long an implied warranty lasts, so the above limitation may not apply to you. Some states do not allow the exclusion or limitation of incidental or consequential damages, so the above exclusions may not apply to you. This warranty gives you specific legal rights, and you may also have other rights which may vary from state to state.

To make a warranty claim, check first with the dealer from whom you purchased the product or visit www.xyleminc.com for the name and location of the nearest dealer providing warranty service.

Xylem |’zīləm|

1) The tissue in plants that brings water upward from the roots;
2) a leading global water technology company.

We’re a global team unified in a common purpose: creating advanced technology solutions to the world’s water challenges. Developing new technologies that will improve the way water is used, conserved, and re-used in the future is central to our work. Our products and services move, treat, analyze, monitor and return water to the environment, in public utility, industrial, residential and commercial building services settings. Xylem also provides a leading portfolio of smart metering, network technologies and advanced analytics solutions for water, electric and gas utilities. In more than 150 countries, we have strong, long-standing relationships with customers who know us for our powerful combination of leading product brands and applications expertise with a strong focus on developing comprehensive, sustainable solutions.

For more information on how Xylem can help you, go to www.xylem.com

xylem
Let’s Solve Water

Xylem Inc.
8200 N. Austin Avenue
Morton Grove IL 60053
Tel: (847) 966–3700
Fax: (847) 965–8379
www.xylem.com/bellgossett

Visit our Web site for the latest version of this document and more information

The original instruction is in English. All non-English instructions are translations of the original instruction.

© 2022 Xylem Inc

Bell & Gossett is a trademark of Xylem Inc or one of its subsidiaries.

P2003449_C_en-US_2022-08_Series e-60