BEVERAGE-AIR®

INSTALLATION AND OPERATING INSTRUCTIONS
for all
HH Warming Cabinets

809-241A Rev. C 02/09/2026
3779 CHAMPION BLVD, WINSTON-SALEM, NC 27105
Phone: (888) 845-9800 | Fax: (800) 253-5168 | Web: beverage-air.com

SEE BACK COVER FOR WARRANTY REGISTRATION

Ali GROUP

WELBILT an Ali Group Company

WELCOME

Congratulations on your purchase of Beverage-Air food service equipment. Every employee welcomes you to the family of satisfied Beverage-Air customers.

From the earliest stages of production design, to focused steps in fabrication and assembly, rigid standards of quality are maintained by our staff of skilled employees. Beverage-Air strives to supply superior products through strict quality control guidelines exceeding industry standards, this means that each unit, given the proper maintenance will provide years of trouble free experience to its owner.

Additionally, Beverage-Air food service equipment has one of the best warranties in the food service industry, and backed by a professional staff of service technicians across the country.

We thank you for your choice and confidence in Beverage-Air Equipment.

Important Information

- PLEASE READ THESE INSTRUCTIONS CAREFULLY BEFORE INSTALLING OR USING, IF RECOMMENDED PROCEDURES ARE NOT FOLLOWED, WARRANTY CLAIMS MAY BE DENIED.
- Your warranty registration information is located with this manual. Please complete the card and submit it to Beverage-Air within TEN days of installation. Failure to properly register equipment may limit or void the warranty.
- Beverage-Air reserves the right to change specifications and product design without notice. Such revisions do not entitle the buyer to corresponding changes, improvements, additions, or replacements for previously purchased equipment.

Contents

Safety 3
Important Information 5
Clearance and Placement 6
Unpacking and Set Up 7
Set Up for Units Without Legs/Casters 8
Shelf Installation 9
Electrical 10
Preheating & Food Storage 11
Recommended Food Storage Periods 12
Using The Unit 13
Sequence of Operations - Eliwell Controller 14
Sequence of Operations - Danfoss Controller 17
Cleaning and Maintenance 21
Methods For Cleaning Stainless Steel 22
Help 23
For The Service Tech - Wiring Diagram 25
Limited Warranty 26
Limited Warranty (continued) 27

SAFETY

This appliance has been designed with your safety in mind. It has many features to keep you from being harmed. However, safe operation and maintenance are your responsibilities. This appliance is not intended for use by persons (including children) with reduced physical, sensory or mental capabilities, or lack of experience and knowledge, unless they have been given supervision or instruction concerning use of the appliance by a person responsible for their safety.

Children should be supervised to ensure that they do not play with the appliance.

CAUTION

Use: When using this unit, please:

- **Move it carefully.** If on casters be sure the casters do NOT run over the power cord.
- **Lock** the casters when in use.
- **Seek help.** This machine is heavy! Be sure to move with enough help to avoid tipping or dropping the cabinet.

CAUTION

- **Prevent children from playing in or on the cabinet**. Persons unable to use this product must be prevented access.
- **Follow all instructions**. There are many safety labels and directions on the unit. Heed them.
- **Watch your fingers**. There may be pinch points near the door hinges.

Important Information to Add

Record the model number, serial number and the date of installation here for future reference. The model and serial numbers are on the unit's serial number dataplate, which is located on the left inside wall.

Model Number	
Serial Number	
Date of Installation	
Purchased From	

CAUTION **WARNING**

Observe the **Caution** and **Warning** notices. They are indicators of important safety information. Keep this manual for future reference.

CAUTION

CAUTION: If it is necessary to move the Cabinet after removal from the skid, remove all doors and carefully push the unit at a point of no more than 36" from the bottom to avoid damage.

IMPORTANT INFORMATION

This unit is intended to be used in a commercial application. That includes bars and restaurants.

If installed in a residence some commercial service companies may not be able to service it on site.

The manufacturer has designed and produced this machine with the finest in materials. The manufacturer assumes no liability for units that have been altered in any way. Alterations or part substitutions will void the warranty.

Limitations

The machine is designed for use indoors in a controlled environment. It must be kept dry, not overheated or subjected to excessive cold. May only be connected to a dedicated electrical circuit. Extension cords are not permitted.

	Minimum	Maximum
Voltage	208	240
Room Air Temp	60° F	100° F

Model	Cabinet Dimensions w x d x h (Inches)	Doors	Glass or Solid Door	Full Load Amps	Power Cord Plug (NEMA)
STANDARD UNITS					
HH1-1S	26 x 33 3/4 x 84 1/2	FULL	SOLID	5.9 / 6.8	6-20P
HH2-1S	52 x 33 5/8 x 84 1/2	FULL	SOLID	11.3 / 13.0	
PASS THRU UNITS					
HH1-1S-PT	26 x 36 3/4 x 84 1/2	FULL	SOLID	5.9 / 6.8	6-20P
HH2-1S-PT	52 x 36 7/8 x 84 1/2	FULL	SOLID	11.3 / 13.0	

Height includes legs

- All models are 208-240 volts, 60 Hz AC.
- Adjustable thermostat control is calibrated to maintain the temperature between 80 and 180° F.
- Remote options are available for some models. They are field wired with 6" legs, and must be requested when the order is placed.
- ALWAYS REFERENCE YOUR EQUIPMENT DATA PLATE AMPS, FOR THE MOST UP TO DATE AND ACCURATE VALUES.

Agency Approvals

These marks appear on the dataplate or serial tag, located in the inside of the left wall. The dataplate also contains the model and serial numbers as well as electrical requirements.

CLEARANCE AND PLACEMENT

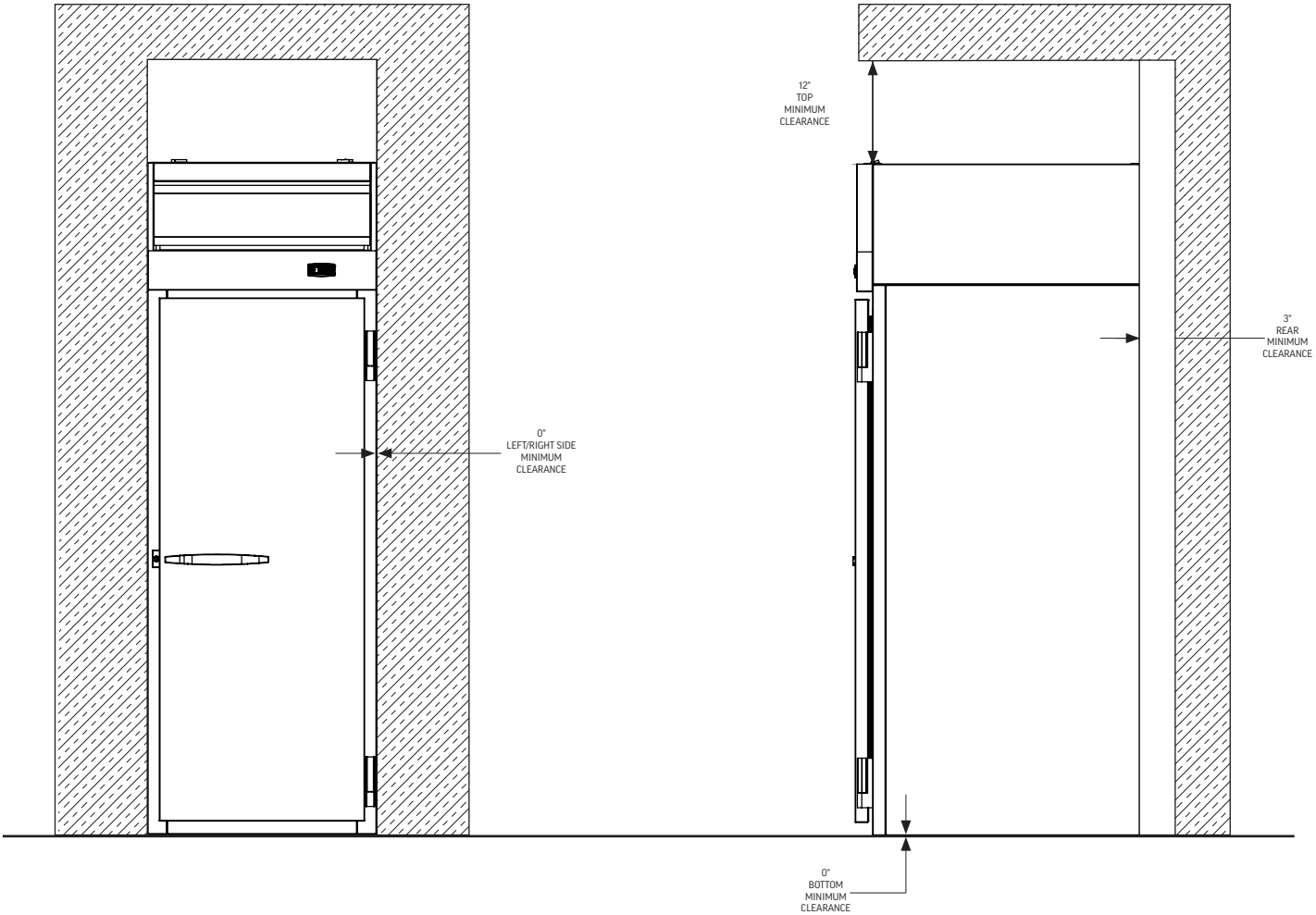

Placement

Consider the following when selecting a location for your Refrigerator:

Clearance:

- 12 in. at the top
- 3 in. at the rear
- 0 in. at the left side
- 0 in. at the right side

Floor Load: the floor on which the Refrigerator is located must be even and level, free from vibrations, and strong enough to support the combined weights of the unit and maximum product load.

Ventilation: Grille area at front must be free and clear of any object or wall.

Power Outlet: The installation of this appliance requires a dedicated power outlet located within the length of the unit's power cord and be accessible for the purpose to disconnect power

UNPACKING AND SET UP

Carefully inspect the shipping carton for damage. This is the only time that shipping damage may be claimed. If damage is suspected, open the carton immediately and, if there is damage, retain the carton and contact the shipper to make a claim. Do NOT contact the manufacturer.

Uncrating

Tools Needed: ¾" box wrench, adjustable wrench, level, flat head screw driver, and box cutter.

1. Remove the cardboard top capping, all clear tape, and all staples including those at the bottom of the cardboard carton and skid.
2. Start from the top of the carton. Using the box cutter, carefully make one continuous cut to the bottom of the skid. Remove cardboard carton and discard.

Note: additional clear plastic protective wrap is applied directly to any product with a glass door.

3. Move unit as close to final position as possible before removing the skid.

Note: The skid must be removed before the casters or legs can be attached.

Skid Removal and Caster Attachment

Tip the unit forward and remove the skid.

WARNING

Risk of personal injury.
Unit must be securely supported while attaching casters or legs.

1. Remove the shipping bolts using the ¾" box wrench while cabinet is held in one direction. Repeat the process while the cabinet is held in the opposite direction.
2. None of the threads on the leg or caster stem should be visible once screwed in.
3. Tilt the cabinet in one direction approximately 8" and block it securely with pieces of 2x4 lumber or other suitable material.
4. Thread the stem casters or legs into the ½ -13 holes in the bottom of the cabinet. Tighten by hand as much as possible. Some models may already have levelers installed. If so, then the levelers will need to first be removed and discarded.
5. Once the caster or leg cannot be turned any further, use a 3/4 inch wrench to tighten the nut in between the mounting plate and the wheel of the caster until snug.
6. Repeat this procedure with unit secured in the opposite direction so as to access the remaining legs/casters/levelers
7. If plate casters or legs are installed instead of stem casters or legs, then repeat step 3 above and secure the plate with either #14 AB screws, or ¼-20 screws, depending upon which are required.
8. If levelers are employed, then repeat step 3 above and thread the leveler in place. Then repeat step 6.
9. If legs/casters will not be installed, please see page 8.

Leveling:

Cabinets must be leveled when installed. Level should be measured on the headrail.

Failure to level your cabinet may result in door not sealing, closing correctly, voiding the warranty.

For cabinets with legs, rotate the foot of the leg with an adjustable wrench to achieve desired height for leveling.

For cabinets with casters, leveling can be achieved by placing large washers in between the ½' stud and the holes located on the bottom of the case.

CAUTION

Do NOT loosen casters to level the cabinet. Casters MUST be tightly secured to cabinet for full strength.

Install or attach any accessories that will be used

Remove any plastic covering the stainless steel.

SET UP FOR UNITS WITHOUT LEGS/CASTERS

Important: The floor where the cabinet is to be permanently located must be a level, flat surface prior to installation. Failure to properly level your equipment can void equipment warranty.

- If legs or casters are not installed, this equipment is required to be sealed to the floor to establish proper sanitary operation. This is a requirement called out in the NSF-4 standard and will be enforced by local health inspectors.
- For warming cabinets mounted directly onto the floor, the floor must be cleaned and dried in advance of the application of sealant.
- Once the warming cabinet is installed onto a clean, dry and level floor, the installation is to be completed by the application of silicone.

The application of the silicone is to be done in a manner to prevent spillage on adjacent surfaces of the floor from passing under the inaccessible portions of the warming cabinet.

INSTRUCTIONS:

1. Place the cabinet in the exact position in which it is to be set permanently.

2. Level the unit, inserting metal shims under unit where required. It is important that an accurate carpenter's level be used when leveling cabinet

3. Construct a wood form to act as a retainer for the grouting compound around the entire base of the cabinet. Pour the grout mixture at various intervals around the form to assure complete fill under the cabinet

4. Using a wide blade putty knife, taper the grout to a feather edge.

5. A tube of NSF approved silicone sealer, having an applicator type nozzle, is highly suited for sealing units to the floor. Apply a small uniform bead completely around the base of the cabinet.

If necessary to move the unit after removing it from the skid, remove all doors and carefully push the cabinet at a point no more than 36" (inches) from the bottom to avoid damage.

SHELF INSTALLATION

1. Determine the proper location for the shelf clips. The reference numbers on the pilaster can serve as a guide to ensure all clips are properly located.
2. Insert the top tab of the shelf clip into the desired hole of the pilaster. The retaining tab MUST be facing up as shown.
3. Rotate the clip downwards and insert the bottom tab into the matching hole in the pilaster. The clip may need to be squeezed slightly during installation.
4. Install all remaining clips.
5. Install shelves onto clips with the product retention bar facing up. Be careful not to dislodge clips during installation.
6. Place shelves so that the retaining tab on the clip captures the shelf as shown.
7. Confirm that the shelf is resting on ALL 4 clips and that the clips are securely attached to the pilasters.
8. Improper shelf clip installation could cause the shelf and / or the product on it to fall, resulting in damage to the unit and possible bodily injury.
9. Do NOT overload the shelves. The unit is designed to use all shelves that are supplied in an equally spaced manner. Contact Beverage-Air customer service if fewer shelves or a different configuration to ensure shelf overloading will not occur.

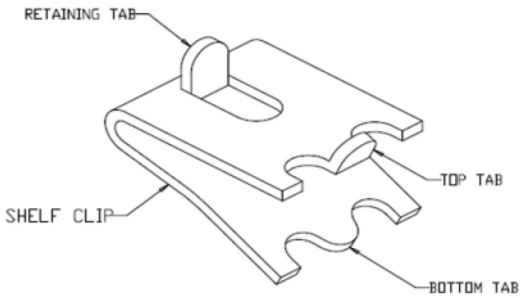

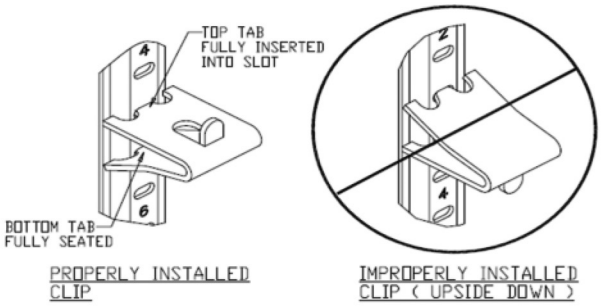

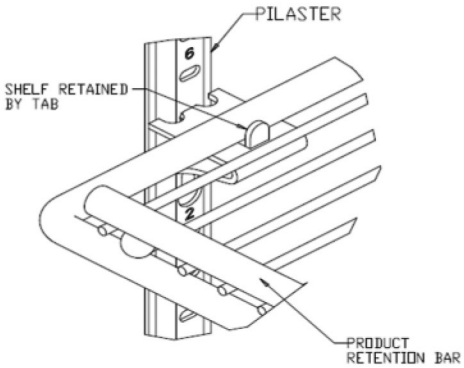

ELECTRICAL

This is a cord-connected unit, and must be connected to its own **dedicated** power supply. Check the dataplate on the machine to confirm the voltage and per the dataplate use the correct fuses or circuit breakers.

Note: Do not connect to GFI / GFCI outlets. Connection to that type of outlet can result in product loss due to unsafe cabinet temperature when GFI device trips from moisture.

Power Cords

This 220 volt model is equipped with a power cord and type 6-20P plug.

If a power cord becomes damaged, it must be replaced with the identical cord.

Follow All National and Local Codes

This Unit Must Be Grounded. Do not use extension cords and do not disable or by-pass ground prong on electrical plug.

Prior to use, the interior and exterior surfaces of the cabinet should be cleaned thoroughly with warm water, mild detergent, and a soft cloth. Apply with a dampened cloth and wipe in the direction of the metal grain. Then allow to air dry with the doors open. Only use a clean soft cloth. See detailed cleaning instructions in the cleaning and maintenance section

Initial Start Up

After the cabinet has been installed, leveled, and cleaned as described above, refer to the following check list:

- Check for proper electrical hook-up.
- Check that all clearances are in line with the aforementioned guidelines.
- Check that cabinet is level.

NOTE: Once the unit has been started and reaches proper storage temperatures, it may be loaded with product.

Door Reversal Instructions

1. Remove hinge cover.
2. Remove door from the unit including the hinge mounting brackets
3. Remove white hole covers from the side of the door opening you would like the hinges to be located (do not throw away).
4. On the bottom of the door the same hole plugs are present and need to be removed.
5. Take the hole plugs and insert them into the screw holes where the hinges were originally located on the unit.
6. Install the hinge bracket upright on the unit. The thick portion of the hinge bracket should be on the bottom as you mount them.
7. The door portion of the hinges need to be removed and rotated 180 degree and remounted.
8. Install the hole plugs that were removed from the bottom of the door into the holes where the handle was first mounted.
9. Slide door back into position and gently lower into the white pivot cam.
10. Replace hinge cover.

PREHEATING & FOOD STORAGE

Food should not be placed in a cold warming cabinet. To preheat the warming cabinet, turn it on one (1) hour before it will be needed. See page 13 on how to use the control display panel to assist in preheating and operation.

If the food has been cooked in the same pan in which it will be served, it should be left in the same pan when being placed in the warming cabinet. However, if food is cooked and served in different pans, the food should be panned as soon as the cooking is completed and placed in the warmer. Although the two methods mentioned may not necessarily pertain to the requirements of daily foodservice activity, another approach for good food quality is to place the food directly to a serving counter after cooking. The warmer keeps the food in good condition during the interval between cooking and serving. It is recommended that food should be stored within the cabinet and in its original pan in which it will be served.

The food should be placed in the cabinet while hot, but not until it stops giving off steam

Note: if steam is excessive, use a lid on pots or pans.

CAUTION	Risk of personal injury from hot pans or racks. User proper hot container handling materials.

It is possible to reheat some food without further deterioration if sufficient time is allowed for the heat to slowly penetrate the entire mass.

Most food can be kept in best condition at a temperature of approximately 160˚F, but the exact temperature varies depending upon the kind of food and method of its preparation; therefore, it is impossible to give any exact instructions which will fit all conditions. It is necessary to experiment by increasing or decreasing the temperature of the unit until you find the temperature at which the majority of the food kept in the unit will keep in the best condition. Once this setting is determined, the controller should always be kept at this setting.

Some food, such as breaded meats, fish, etc., when kept at proper temperature, requires less degree of moisture in the cabinet to prevent sogginess. For this reason, all cabinets are equipped with vents or dampers. The damper should be opened for such food by turning the knob in the desired direction for opening and closing. This knob opens or closes the vent in the top of the cabinet. By looking into the cabinet when operating the knob, you can fully understand its function and adjustment.

Some foods can be kept in good condition much longer than others, and certain foods cannot be satisfactorily kept at all in any manner. French fried potatoes, roasts, waffles and similar foods, where the outside must be crisp and centers steaming hot must be prepared immediately before serving. Do not expect the impossible from the warming cabinet, but if used intelligently it will keep food over a longer period of time and with less deterioration than is possible with any other equipment. By reducing the deterioration between the time the food is cooked and the time it is served, the warming cabinet will assure serving the food to the customer in proper condition. See the recommended food storage periods table as a reference guide.

RECOMMENDED FOOD STORAGE PERIODS

Product	Longest Time Kept	Average Time Kept	Approximate Temp. ˚F
*Crispy or Dry Foods			
Baked Potatoes	2 hours	30 minutes	170 -180
Corn Stick	2 hours	1 hour	140 - 150
Crackers	8 hours	5 hours	140 - 150
Chicken Pies	6 hours	3 hours	170 - 180
Club Sandwiches (wrapped)	1 hour	30 minutes	160
Fried Chicken	6 hours	3 hours	170 -180
Fried Seafood	6 hours	2 hours	170 -180
Hard Rolls	8 hours	4 hours	140 - 150
Hot Mince or Apple Pie	6 hours	4 hours	160
Meat Pies	6 hours	3 hours	170-180
Popcorn & Potato Chips	10 hours	5 hours	150
*Moist Foods			
Baked Beans	8 hours	4 hours	170 -180
Baked Stuff Lobster	3 hours	2 hours	170 -180
Biscuits	1 hour	30 minutes	150 - 175
Casserole (without top crust)	8 hours	4 hours	170 - 180
Chop Suey	6 hours	4 hours	180
Deviled Crabs	5 hours	3 hours	170 -180
Frankfurter	6 hours	3 hours	160 - 175
Hash	4 hours	2 hours	170 -180
Mashed Potatoes	3 hours	2 hours	160 - 180
Vegetables (ready for serving)	6 hours	2 hours	170 -180
Sweet Rolls	4 hours	2 hours	140 - 150

USING THE UNIT - ELIWELL CONTROLLER

Operation is simple, just keep it connected to the correct power supply and the warmer will maintain the internal temperature it has been set to. Keep the doors closed as much as possible to avoid unnecessary run time.

The controller displays the current internal temperature.

Adjusting the set temperature lower will NOT cause the system to rise the temperature faster. When on, the heater system is always operating at maximum.

The temperature was set at the factory at 160° F, but you can adjust it to your own selected temperature. 30 seconds after adjustment, the display automatically reverts to showing the current temperature.

The internal fan will be on when the unit is plugged in.

If equipped with glass doors, pressing the down button in will turn the cabinet light on or off.

In most cases the only thing displayed will be the cabinet temperature. When something other than normal operation has occurred, a message will be shown.

Message Displayed	Why	What to do
AL1	Cabinet temperature too Low	Confirm doors are closed.
OPd	Door is open	Close door, if message does not change, call for service.
E1, E2, E3, E4	Sensor unplugged or has failed	Call for service.

SEQUENCE OF OPERATIONS - ELIWELL CONTROLLER

The warmer operates based on the air temperature measured by the probe located at the return air.

	ON		OFF	
COMPONENT	**OPERATION**	**CONTROLLER ACTION**	**OPERATION**	**CONTROLLER ACTION**
HEATER	Heater turns on when the air temperature at the probe is above the sum of the set point + 4	The Heater Contact is energized (RTN400 - Terminal #10 and #11)	Heater turns off when the air temperature at probe is equal to or less than the set point	The Heater Contact is de-energized (RTN400 - Terminal #10 and #11)
BLOWER	The Blower turns on when the unit is powered on.	The Blower is wired to constant power (RTN400 - Terminal #4 and #5)	The Blower turns off when the unit is unplugged or put into standby.	The Blower is wired to constant power RTN400 - Terminal #4 and #5)
LIGHT	The light will turn on when the down button is pressed (or when the door is opened with solid doors)	The Light Contact is energized (RTN400 - Terminal #13 and #14)	The light will turn off when the down button is pressed (or when the door is closed with solid doors)	The Light Contact is de-energized (RTN400 - Terminal #13 and #14)

Condition	Heater	Blower	Lights
Cabinet Temp > Set point + 4	**ON**	**ON**	**ON or OFF**
Cabinet Temperature <= Set point - 4	**OFF**	**OFF**	**ON or OFF**

Electronic Controller

Controller Symbols

	Reduced SET / Economy Permanently on: Energy Saving Mode Flashing: Reduced Set Mode Quick Flashing: Access to level 2 parameters	AUX	**AUX** Permanently on: Aux Active Flashing: Deep Cooling Cycle Active
	Heater Permanently On: Heater Active Flashing: Delay, protection or blocked start-up		**Defrost (NOT ACTIVE ON THESE MODELS)** Symbol will illuminate during start up, then remain off
	Alarm Permanently on: Alarm Active Flashing: Alarm Acknowledged		**Fan** Permanently on: Fans Active
°C	**Celsius** Permanently On: ˚C Setting	°F	**Fahrenheit** Permanently on: ˚F Setting

Controller Buttons

	Up **Press and release** • Scrolls through menu items • Increases Values **Press for at least 5 seconds** • No Function		**Stand-by** **Press and release** • Returns to the previous menu level • Confirm parameter value **Press for at least 5 seconds** • Activates the stand-by function
	Down **Press and release** • Scrolls through menu items • Decreases values **Press for at least 5 seconds** • Turn light on/off	set	**Set (Enter)** **Press and release** • Displays alarms • Opens the machine status menu **Press for at least 5 seconds** • Opens the programming menu • Confirms commands

Electronic Controller Alarms

Alarms are always indicated by the buzzer (if present) and the alarm icon. To switch off the buzzer, press and release any key, the relative icon will continue to flash.

Alarm Code	Trigger	Automatic Clearance	Outputs	Comments
"AH1"	Pb1 probe HIGH Temperature alarm	User configured	Label AH1 displayed alternately with the actual value read by the probe Pb1	High temperature alarm
"AL1"	Pb1 probe LOW Temperature alarm	User	Label AL1 displayed alternately with the actual value read by the probe Pb1	Low temperature alarm
"OPd"	Door open for more than	Always	Label OPd displayed alternately with the actual value read by probe Pb1	Door open alarm
"E1"	"E1" error	Always	Blink "E1 ". If configured: cut in alarm relay, beep the buzzer	"PB1" sensor failure (short or open)
"E2"	"E2" error	Always	Blink "E2". If configured: cut in alarm relay, beep the buzzer	"PB2" sensor failure (short or open)
"E3"	"E3" error	Always	Blink "E3 ". If configured: cut in alarm relay, beep the buzzer	"PB3" sensor failure (short or open)
"E4"	"E4" error	Always	Blink "E4 ". If configured: cut in alarm relay, beep the buzzer	"PB4" sensor failure (short or open)

SEQUENCE OF OPERATIONS - DANFOSS CONTROLLER

The warmer operates based on the air temperature measured by the probe located at the return air.

	ON		OFF	
COMPONENT	**OPERATION**	**CONTROLLER ACTION**	**OPERATION**	**CONTROLLER ACTION**
HEATER	Heater turns on when the air temperature at the probe is above the sum of the set point and the dead band	The Heater Contact is energized (ERC 112 – Terminal #1)	Heater turns off when the air temperature at probe is equal to or less than the set point	The Heater Contact is de-energized (ERC 112 – Terminal #1)
BLOWER	The Blower runs continuously. When the unit is plugged in, the Blower will run.	The Blower is connected directly to incoming power, not through the controller.	The Blower runs continuously. When the unit is plugged in, The Blower will run.	The Blower is connected directly to incoming power, not through the controller.
LIGHT	The light will turn on when the SC is pressed	The Light Contact is energized (ERC 112 – Terminal #4)	The light will turn off when the SC is pressed	The Light Contact is de-energized (ERC 112 – Terminal #4)

Condition	Heater	Blower	Lights
Cabinet Temp > Set point + 2	**ON**	**ON**	**ON or OFF**
Cabinet Temperature <= Set point - 2	**OFF**	**ON**	**ON or OFF**

Electronic Controller

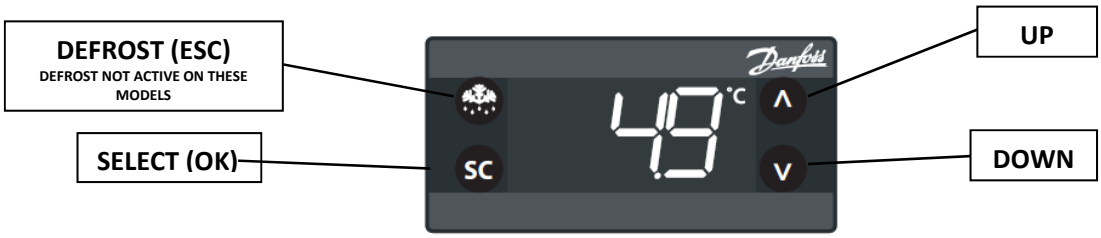

Control Panel Display

	Defrost LED (NOT ACTIVE)		**Alarm LED**	
	Symbol will illuminate during start up, then remain off		On fixed:	ALARM Present
			Flashing:	ALARM Silenced
			Off:	No Alarm
	Fan LED		**Heater LED**	
	On fixed:	Fan active	On fixed:	Heater active
	Off:	Fan Off	Flashing:	Delay, protection or activation blocked
			Off:	No Alarm

NOTE: When switched on, the instrument panel performs a lamp test for a few seconds.

Keyboard Functions

UP **Press and release** • Scrolls the menu items • Increases the values	**DOWN** **Press and release** • Scrolls the menu items • Decreases the values	**DEFROST (ESC)** • **No Function**	**SET (ENTER)** **Press and release** • Confirms the parameter value • Toggles light on/off

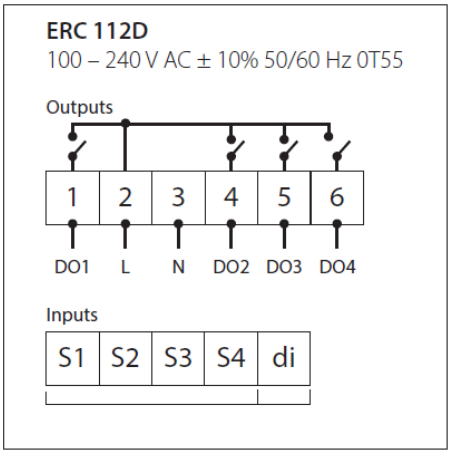

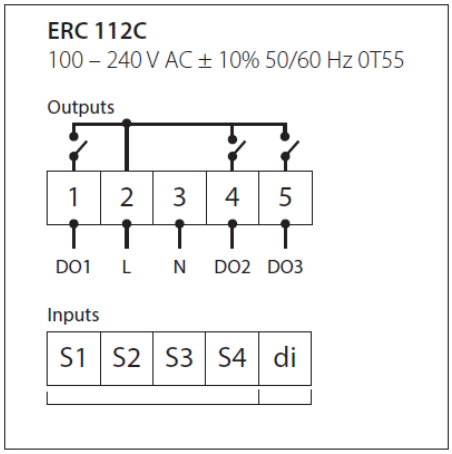

Changing the Setpoint

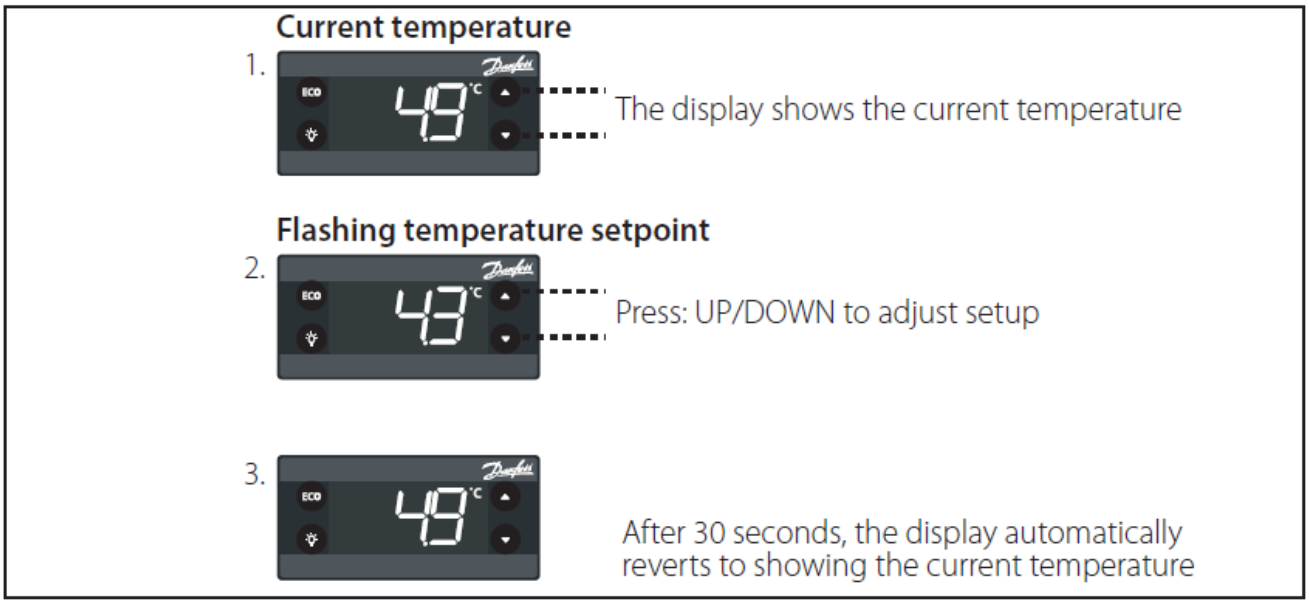

Electronic Controller Alarms

The alarm condition is always signaled by the alarm icon . Press any button to silence the alarm, the relative icon will continue flashing.

Alarm code	Trigger	Automatic clearance	Outputs	Comments
"Hi"	Air temperature is higher than *"ALA->Hat"* for *"ALA->Htd"*	User configured	Blink *"Hi"* with the highest temperature; If configured: cut in alarm relay, beep the buzzer	High temperature alarm
"Lo"	Air temperature is lower than *"LAt"* for *"Ltd"*	User configured	Blink *"Lo"* with the lowest temperature. If configured: cut in alarm relay, beep the buzzer	Low temperature alarm
"Con"	Condenser temperature is too high or too low	User configured	Blink *"Con"*. If configured: cut in alarm relay, beep the buzzer	Condenser alarm
"dor"	Door open for more than *"ALA -> dod"*	Always	Blink *"dor"*. If configured: cut in alarm relay, beep the buzzer	Door open alarm
"uHi"	Line voltage is higher than *"Cop->uHi"*	Always	Blink *"uHi"*. If configured: cut in alarm relay, beep the buzzer	High voltage alarm
"uLi"	Line voltage is lower than *"Cop->uLi"*	Always	Blink *"uLo"*. If configured: cut in alarm relay, beep the buzzer.	Low voltage alarm
"LEA"	Compressor continuous running for more than *"ALA->LEA"*	Always	Blink *"LEA"*. If configured: cut in alarm relay, beep the buzzer	Leakage alarm
"E01"	*"S1"* error	Always	Blink *"E01"*. If configured: cut in alarm relay, beep the buzzer	*"S1"* sensor failure (short or open)
"E02"	*"S2"* error	Always	Blink *"E02"*. If configured: cut in alarm relay, beep the buzzer	*"S2"* sensor failure (short or open)
"E03"	*"S3"* error	Always	Blink *"E03"*. If configured: cut in alarm relay, beep the buzzer	*"S3"* sensor failure (short or open)
"E04"	*"S4"* error	Always	Blink *"E04"*. If configured: cut in alarm relay, beep the buzzer	*"S4"* sensor failure (short or open)

How to Acknowledge Alarms

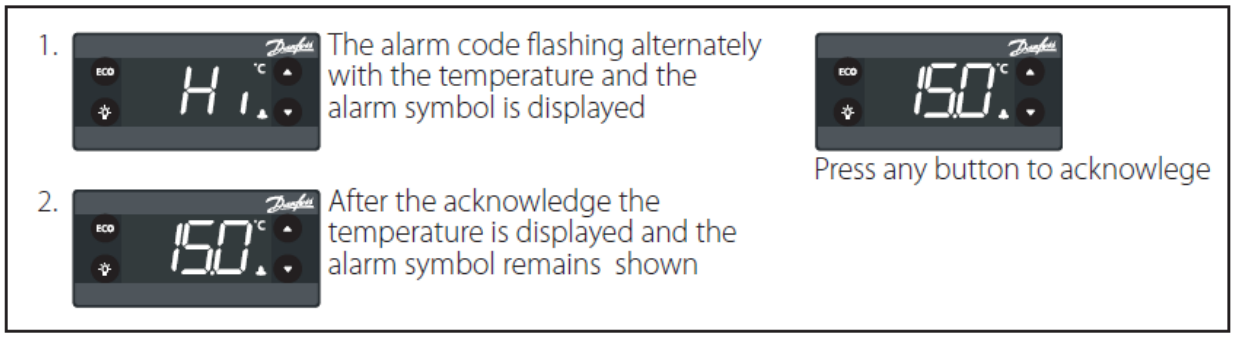

CLEANING AND MAINTENANCE

Cleaning Schedule:

Cabinet	Gaskets	Routine maintenance
Daily wipe down Weekly interior	Daily inspection, check that hinges are tight to the cabinet.	Annually

Daily Exterior Cleaning

It is much easier to clean on a regular basis than to have to remove stains once they have built up.

1. Wash with a clean sponge and a mild detergent that does not contain chlorine.
2. Rinse with clean water.
3. Dry with a soft cloth.
4. Polish with a soft cloth, wiping with the grain.
5. Wipe weekly with stainless steel cleaner.

Weekly Interior Cleaning

1. Remove all food, food related items and shelves. Store the food at a safe temperature.
2. Disconnect power to the unit (unplug it or switch the breaker off).
3. Remove all loose food particles from the inside walls, floor, door liner and ceiling.
4. Scrub all interior surfaces and door gaskets with a warm (100°F to 110°F) detergent solution and a soft scrub brush.
5. Rinse with clean water and allow to air dry.
6. Return the shelves to the unit and secure them.
7. Restore power.
8. Return food to the unit when it has reached a safe temperature.

Periodic, Gaskets

1. Visually inspect the door gaskets for a tight seal on all four sides. Inspect for any type of damage such as rips, tears, stiffness, or cracks.
2. If any such condition exists, the magnet will not seal and the gasket will need replaced.
3. Cleaning the gasket requires the use of mild dish detergent and warm water. Next, thoroughly rinse and dry the gasket.

METHODS FOR CLEANING STAINLESS STEEL

Cleaning Needed	Cleaning Agent	Method of Application	Affect on Finish
Smears and fingerprints	Areal 20, Lac-O-Nu, Lumin Wash O'Cedar Cream Polish, Stainless Shine.	Rub with cloth as directed on the package.	Satisfactory for use on all finishes. Provides barrier film to minimize prints.
Stubborn Spots and Stains, Baked-On Splatter, and Other Light Discolorations	Allchem Concentrated Cleaner.	Apply with damp sponge or cloth. Rub with damp cloth.	Use in direction of polish lines on No. 4 (polished) finish. May scratch No. 2 (mill) and Nos. 7 and 8 (polished) finishes.
	Samae, Twinkle or Cameo Copper Cleaner	Rub with damp cloth.	
	Grade FFF Italian pumice, whiting, or talc.	Rub with dry cloth.	
	Liquid NuSteel Paste NuSteel or DuBois Temp. Copper's Stainless Steel Cleaner Revere Stainless Cleaner Household cleansers, such as Old Dutch, Lighthouse, Sunbrite, Wyandotte, Bab-O, Gold Dust, Sapolio, Bon Ami, Ajax, or Comet Grade F Italian Pumice, Steel Bright, Lumin Cleaner, Zud, Restore, Sta-Clean, or Highlite. Penny-Brite or Copper-Brite.	Use small amount of cleaner. Rub with dry cloth using a small amount of cleaner. Apply with damp sponge or cloth. Rub with a damp cloth. May contain chlorine bleaches. Rinse thoroughly after use. Rub with a damp cloth. Rub with a dry cloth using a small amount of cleaner.	
Heat tint or discoloration	Penny-Brite or Copper-Brite. Past NuSteel, DuBois Temp, or Tarnite. Revere Stainless Steel Cleaner. Allen Polish, Steel Bright, Tenacious Deposits, Rusty Discolorations, Industrial Atmospheric Stains Wyandotte, Bab-O or Zud.	Rub with a dry cloth. Rub with a dry cloth or stainless steel wool. Apply with damp sponge or cloth. Rub with a damp cloth.	
Burnt-On Foods and Grease Fatty Acids, Milkstone (where swabbing or rubbing is not practical)	Easy-Off, De-Grease-It, 4 to 6% hot solution of such agents as trisodium phosphate or sodium tripolyphosphate or 5 to 15% caustic soda solution	Apply generous coating. Allow to stand for 10-15 minutes. Rinse. Repeated application may be necessary.	Excellent removal, satisfactory for use on all finishes.
Tenacious Deposits, Rusty Discolorations, Industrial Atmospheric Stains	Oakite No. 33, Dilac Texo 12, Texo NY, Flash-Klenz, Caddy Cleaner, Turco Scale 4368 or Permag 57.	Swab and soak with clean cloth. Let stand 15 minutes or more according to directions on package, then rinse and dry.	Satisfactory for use on all finishes
Hard Water Spots and Scale	Vinegar. 5% oxalic acid, 5% sulfamic acid, 5 to 10% phosphoric acid, or Dilac, Oakite No. 33, Texo 12, Texo N.Y.	Swab or wipe with cloth. Rinse with water and dry. Swab or soak with cloth. Let stand 10-15 minutes. Always follow with neutralizer rinse, and dry.	Satisfactory for all finishes. Satisfactory for all finishes. Effective on tenacious deposits or where scale has built up.

HELP

PROBLEM	POSSIBLE CAUSE	REMEDY
Cabinet not operating	Fuse blown or circuit breaker tripped	Replace fuse or reset circuit breaker
	Power cord unplugged	Plug in power cord to designated receptacle. Cabinet cannot share same outlet with other equipment.
	Improper voltage supplied to cabinet (voltage does not match Data-Plate).	Correct supply voltage (remove extension cords or other equipment on circuit, etc)
	Main power switch and/or controller turned off	Turn on main power switch and/or controller.
	Defective high limit/heater safety switch	Internal high limit/heater safety may be defective. Contact the factory or an authorized service provider for further assistance if all else has been checked above and the cabinet is still not operating.
Cabinet not holding temperature	Cabinet not pre-heated before use	Turn cabinet on one (1) hour before use
	Prolonged door opening of door ajar	Make sure door is closed when not in use. Avoid prolonged door openings.
	Door gasket not sealing properly	Check door gasket condition Adjust door or replace gasket.
	Controller setpoint is too low	Adjust controller setpoint to a higher temperature
	Improper voltage supplied to cabinet (voltage match Data-Plate)	Correct supply voltage (remove extension cords or does not) other equipment on circuit, etc).
	Product load held too long	Hold product load inside cabinet per recommended temperature. Examples of holding times and temperatures are on page 11.
	Blower motor not operating or air duct is air duct is restricted,	Check blower motor and air duct for proper air flow. Try to carefully locate and remove the cause of air restriction. If further assistance is restricted required, contact the factory or authorized service provider for further assistance.
	Heater elements not operating	Carefully check heater elements for proper operation .If heating element(s) are not working properly, contact the factory or an authorized service provider for further assistance.
Cabinet is overheating.	Defective high limit/heater safety switch	If controller setpoint is adjusted to a lower setting and the internal cabinet temperature exceeds +200' F, turn off cabinet and contact the factory or an authorized service provider for further assistance
	Defective blower motor	Check blower motor operation. If blower motor is not operating, contact the factory or an authorized service provider.

Product load burning or boiling	Product load is too close to heating element	Rearrange product load so that it is not too close to heating element(s).
	Controller setpoint is too high	Adjust controller setpoint to a lower setting. Examples of holding times and temperatures are within the operator's manual.
Product load becoming soggy	Too much humidity or moisture inside cabinet	Adjust or close internal venting/damper knob to control moisture. Normally the internal venting/ damper should be open for products such as breaded meats, fish, etc
	Product load held too long time.	Hold product load inside cabinet per recommended time. Examples of holding times and temperatures are on page 11.
Cabinet is noisy	Part(s) loose	Locate and tighten loose part(s)
	Cabinet is not level	Level cabinet by adjusting legs or shimming caster
Door won't close	Hinge(s) may need slight adjustment	Apply shim(s) to hinge until door seals properly
Controller Alarm & Error	----	Refer to either pages 15 or 19 of manual for alarm codes. If problem(s) persist,Codes contact the factory for further assistance

FOR THE SERVICE TECH - WIRING DIAGRAM

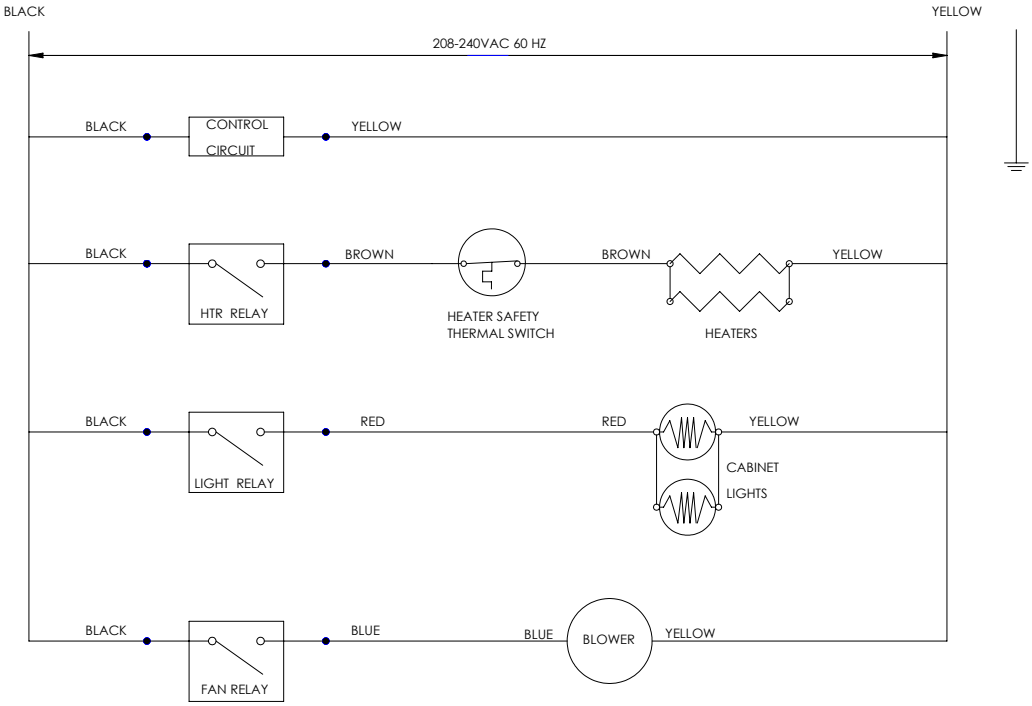

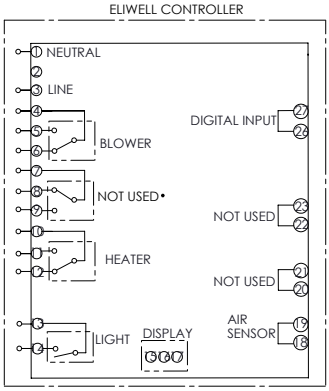

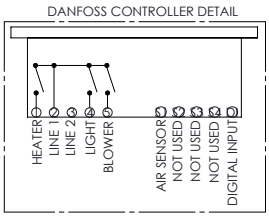

LIMITED WARRANTY

WARRANTY (Warranty valid in USA and Canada)

SEVEN (7) YEAR PARTS, LABOR AND COMPRESSOR WARRANTY:

Beverage-Air Corporation warrants to the original purchaser of Beverage-Air branded equipment, including all parts thereof, that such equipment is free from defects in material and workmanship, under normal use, with proper maintenance, and service as indicated by Beverage-Air installation and operation instructions, for a period of SEVEN (7) years from the date of installation, or eighty-eight (88) months from the date of shipment from the manufacturer, whichever is earlier (units shipped from July 1, 2024 are eligible for 7-year warranty). In addition, Beverage-Air warrants the hermetically/semi-hermetically sealed compressor (part only) for SEVEN (7) years; not to exceed eighty-eight (88) months from the date of shipment from Beverage-Air, provided upon receipt of the compressor, manufacturer examination shows the sealed compressor to be defective. This warranty does not cover freight for the replacement compressor or freight for the return of the failed compressor.

* Units shipped after 07/01/2024. Previous warranty applies to units shipped prior.

EXCEPTIONS:

- CT96 and CF3 models carry a ONE (1) year parts and labor warranty, limited to fifteen (15) months from date of shipment from Beverage-Air. These are excluded from additional compressor warranty.
- SR/SF (Slate) models carry a TWO (2) year parts and labor warranty, limited to twenty-seven (27) months from date of shipment from Beverage-Air.
- BZ, VM, CDR, DPCR, MT and Blast Chillers carry a THREE (3) year parts and labor warranty; additional TWO (2) years compressor part only.
- Units installed in Residential applications will be not covered under this warranty. Units are intended for Commercial use only.

Also, this compressor-part only warranty does NOT apply to any electrical controls, condenser, evaporator, fan motors, overload switch, starting relay, capacitors, temperature control, filter/drier, accumulator, refrigeration tubing, wiring harness, labor charges, or supplies which are covered by the warranty above.

Note: 3rd party extended warranties are not covered by this warranty statement.

Normal wear parts, as deemed by Beverage-Air, such as but not exclusive to, light bulbs/lamps and gaskets are not covered by this warranty. For the purpose of this warranty, the original purchaser shall be deemed to mean the individual or company for who the product was originally installed.

Units that utilize variable speed compressor technology can experience nuisance tripping on Class A GFCI outlets which have a trip limit of 4 mA to 6 mA. To avoid this issue in a location that requires GFCI circuit protection, Beverage-Air & Victory recommends using a HUBBELL Model Number GFRST83W 20A Heavy Duty Hospital Grade Self-Test GFCI Receptacle. Nuisance tripping not covered under warranty.

Our obligation under this warranty shall be limited to repairing or replacing, including labor, any part of such product, which proves thus defective. Beverage-Air reserves the right to examine any product claimed to be defective and request photos of the unit prior to dispatching service. Moisture or water damage is not covered under warranty. If service is deemed non-warranty, Beverage-Air reserves the right to bill the end user for service.

The labor warranty shall be for self-contained units only and for standard straight time, which is defined as normal service rate time, for service performed during normal working hours. All warranty labor will be covered at standard time. Any service requested outside of a servicer's normal working hours including weekends and any additional overtime will be at the responsibility of the equipment purchaser. Any part or accessory determined to be defective in the product should be returned to the company within thirty (30) days under the terms of this warranty and must be accompanied by a record of the cabinet model, serial number, and identified with a return material authorization number (RMA#) issued by the manufacturer.

Special installation/applications, including remote locations, are limited in coverage by this warranty. Any installation that requires extra work, and/or travel, to gain access to the unit for service is the sole responsibility of the equipment purchaser.

Improper operation resulting from factors, including but not limited to, improper or negligent cleaning and maintenance, improper installation, low voltage conditions, inadequate wiring, outdoor use (unless otherwise specified) and accidental damage are not manufacturing defects and are strictly the responsibility of the purchaser.

LIMITED WARRANTY (CONT'D)

With the exception of Blast Chillers, the product is designed for maintaining temperature and not bringing food to a desired temperature and therefore cannot be held responsible for this function under warranty. Units must be in a conditioned environment or warranty will be void. Non-standard use of unit can also be subject to reduced or voided warranty.

Condensing coils must be cleaned at regular intervals as a part of preventative maintenance for optimal performance. Failure to do so is subject to a voided warranty. Although cleaning requirements vary in accordance with operation of various products, Beverage-Air recommends a minimum monthly cleaning.

NO CLAIMS CAN BE MADE AGAINST THIS WARRANTY FOR SPOILAGE OF FOOD, PRODUCTS, LOSS OF SALES OR CONSEQUENTIAL DAMAGES.

THE FOREGOING WARRANTIES ARE EXPRESSLY GIVEN IN LIEU OF ALL OTHER WARRANTIES, EXPRESS, IMPLIED, OR STATUTORY, INCLUDING THE IMPLIED WARRANTIES OF MERCHANTABILITY AND FITNESS FOR A PARTICULAR PURPOSE, WHICH ARE HEREBY DISCLAIMED, ALL OTHER OBLIGATIONS OR LIABILITIES ON OUR PART, AND WE NEITHER ASSUME, NOR AUTHORIZE ANY OTHER PERSON TO ASSUME FOR US, ANY OBLIGATION OR LIABILITY IN CONNECTION WITH THE SALE OF SAID REFRIGERATION UNITS OR ANY PARTS THERE OF.

This warranty shall not be assignable and shall be honored only in so far as the original purchaser. This warranty does not apply outside the limits of the United States of America and Canada, nor does it apply to any part that has been subject to misuse, neglect, alteration, accident, or to any damage caused by transportation, flood, fire, acts of terrorism, or acts of God.

LIMITATION OF LIABILITY:

Beverage-Air Corporation or their affiliates shall not be liable for any indirect, incidental, special or consequential damages, or losses of a commercial nature arising out of malfunction equipment or its parts components thereof, as a result of defects in material or workmanship.

THE ORIGINAL OWNER'S SOLE AND EXCLUSIVE REMEDY AND BEVERAGE-AIR'S SOLE AND EXCLUSIVE LIABILITY SHALL BE LIMITED TO THE REPAIR OR REPLACEMENT OF PARTS OR COMPONENTS CONTAINED IN THE EQUIPMENT IDENTIFIED ABOVE WHICH UNDER NORMAL USE AND SERVICE MALFUNCTION AS A RESULT OF DEFECTS IN MATERIAL OR WORKMANSHIP, SUBJECT TO THE APPLICABLE PROVISIONS AND LIMITATIONS STATED ABOVE.

Note: Additional Terms and Conditions of sale may apply. Notice: Specifications are subject to change without notice. Contact Beverage-Air for specific model agency approval. All prices are ex-works Brookville, PA. July 1, 2024

Warranty Registration

Register your product online at **beverage-air.com/parts-service** or fill out and mail the form below.

Cabinet Model Number: _____ Date Of Installation: _____

Cabinet Serial Number: _____

Location Of Product

Business Name: _____

Business Street: _____

Business City: _____ State: _____ Postal Code:_____

Mail to: Beverage-Air, 3779 Champion Blvd, Winston-Salem, NC 27105

Rev. 02/26