BRADFORD WHITE®

WATER HEATERS

RESIDENTIAL & LIGHT DUTY COMMERCIAL GAS REPLACEMENT PARTS LIST

Power Direct Vent Models ("PDV" Series)

Models Covered:
RG2PDV(40,50)S*
RG2PDV(50,75)H*
LG2PDV(50,75)H*

Includes Hydrojet® Total Performance System

Effective: October, 2024
ECO 8780

NOTE: BOTH MODEL AND SERIAL NUMBERS ARE REQUIRED FOR ORDERING REPLACEMENT PARTS

Dimensions and specifications subject to change without notice.

WARNING
CANCER AND REPRODUCTIVE HARM
WWW.P65WARNINGS.CA.GOV

As required by the state of California Proposition 65.

Parts Book #238-51513-00H

Save this manual for future reference

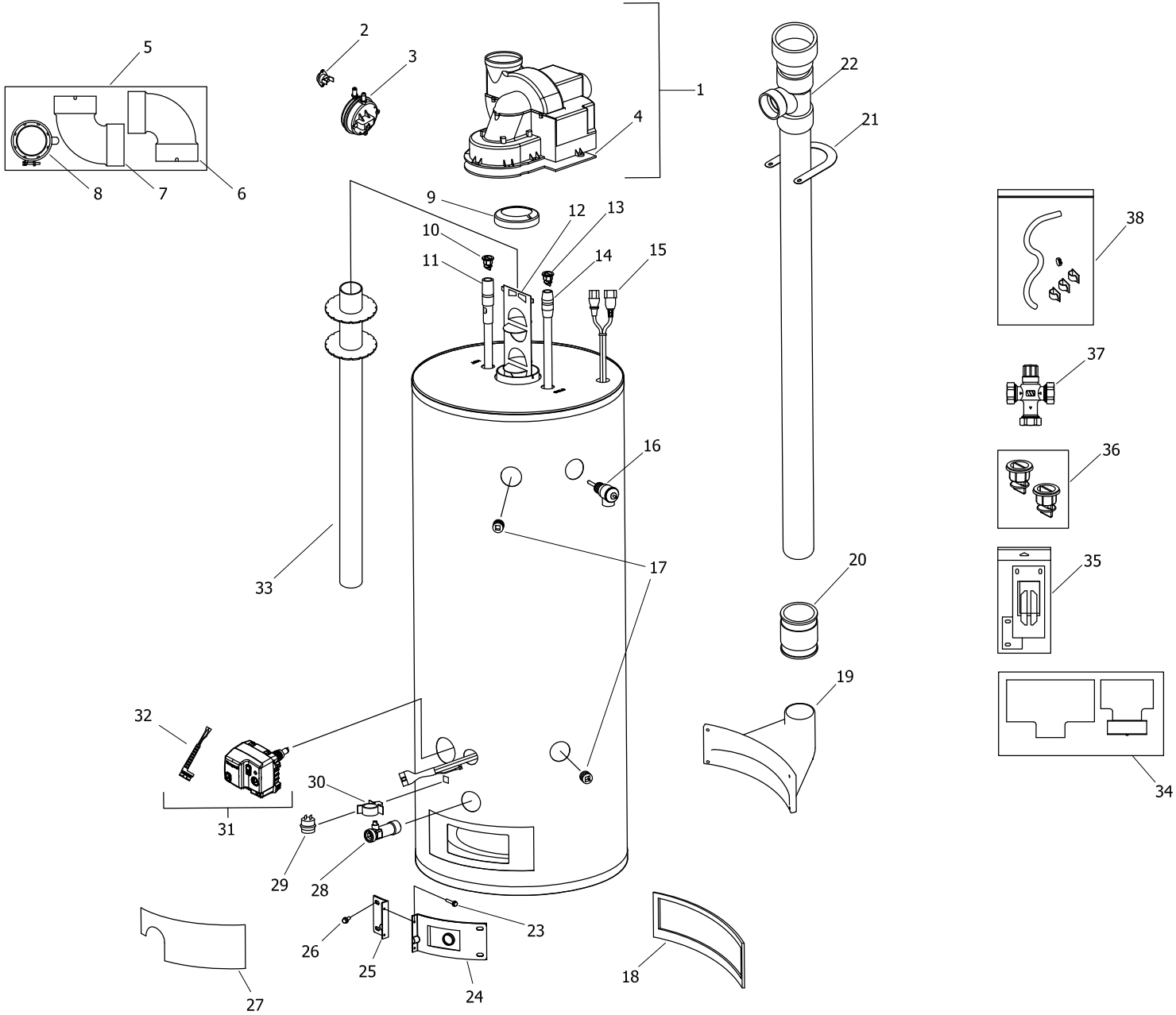

BRADFORD WHITE®
WATER HEATERS

Item	Description	Model RG2PDV40S*	Model RG2PDV50S*	Model RG2PDV50H*	Model LG2PDV50H*	Model RG2PDV75H*	Model LG2PDV75H*
1	Blower Assembly (Normal Alt.) 0 Ft. to 2,000 Ft.	415-47386-00	415-47386-00	415-47387-00	415-47387-00	415-47387-00	415-47387-00
	Blower Assembly (-475 model suffixes) 2,100 Ft. to 7,000 Ft.	239-48527-00	239-48527-00	239-48528-00	239-48528-00	239-48528-00	239-48528-00
2	Blower Temperature Switch	415-48752-00	415-48752-00	415-48752-00	415-48752-00	415-48752-00	415-48752-00
3	Pressure Switch Exhaust (Normal Alt.) 0 Ft. to 2,000 Ft.	415-48058-01	415-48058-01	415-48058-01	415-48058-01	415-48058-01	415-48058-01
	Pressure Switch Exhaust (-475 model suffixes) 2,100 Ft. to 7,000 Ft.	415-48058-02	415-48058-02	415-48058-02	415-48058-02	415-48058-02	415-48058-02
4	Blower Gasket	239-45866-00	239-45866-00	239-45866-00	239-45866-00	239-45866-00	239-45866-00
5	Vent Adapter with Vent Terminal	239-47992-00	239-47992-00	239-48781-00	239-48781-00	239-48781-00	239-48781-00
6	Intake Vent Terminal Elbow	239-39831-00	239-39831-00	415-40579-00	415-40579-00	415-40579-00	415-40579-00
7	Exhaust Vent Terminal Elbow	239-39831-00	239-39831-00	415-40579-00	415-40579-00	415-40579-00	415-40579-00
8	Exhaust Adapter	239-45709-00	239-45709-00	239-45639-00	239-45639-00	239-45639-00	239-45639-00
9	Flue Reducer	---	---	243-42572-00	243-42572-00	---	---
10	Heat Trap Insert (Outlet)	415-45167-00	415-45167-00	415-45167-00	415-45167-00	415-45167-00	415-45167-00
11	Hot Water Outlet Anode (Magnesium) ▲#	415-55482-00	415-55482-00	415-55482-00	415-55482-00	415-55482-00	415-55482-00
	Hot Water Outlet Anode (Aluminum) ▲#	415-55484-00	415-55484-00	415-55484-00	415-55484-00	415-55484-00	415-55484-00
	Hot Water Outlet Anode (A420 Aluminum) ▲#	415-55486-00	415-55486-00	415-55486-00	415-55486-00	415-55486-00	415-55486-00
12	Flue Baffle	239-45372-00	239-45372-00	239-45373-00	239-45373-00	---	---
13	Heat Trap Insert (Inlet)	415-51556-00	415-51556-00	415-51556-00	415-51556-00	415-45167-00	415-45167-00
14	Cold Water Inlet Diptube (Polysulfone) ▲▲	---	---	---	---	229-45092-09	229-45092-09
	Cold Water Inlet Diptube (PEX) ▲▲	229-53466-02	415-51230-20	229-51230-26	415-51230-29	---	---
15	Blower Harness	239-45617-03	239-45617-03	239-45617-02	239-45617-02	239-45617-02	239-45617-02
16	T&P Relief Valve	415-40594-02	415-40594-02	415-40594-02	415-40594-02	415-40594-02	415-40594-02
17	3/4 NPT Plug	---	---	239-11638-00	239-11638-00	239-11638-00	239-11638-00
18	Air Intake Boot Gasket	239-47832-00	239-47832-00	239-47832-00	239-47832-00	239-47832-00	239-47832-00
19	Air Intake Boot	239-47514-18	239-47514-20	239-47514-18	239-47514-18	239-47514-22	239-47514-22
20	Coupling-2 X 2	239-47850-00	239-47850-00	239-47850-00	239-47850-00	239-47850-00	239-47850-00
21	Bracket-Vertical intake	239-47671-02	239-47671-02	239-47671-01	239-47671-01	239-47671-01	239-47671-01
22	Tee and vent pipe Assembly	239-51391-02	239-51391-02	239-51391-04	239-51391-04	239-51391-03	239-51391-03
23	Screw-#8-18 x 3/4 HWH	239-44195-00	239-44195-00	239-44195-00	239-44195-00	239-44195-00	239-44195-00
24	Right Side Inner Door	239-45642-18	239-45642-20	239-45642-18	239-45642-18	239-47504-22	239-47504-22
25	Left Side Inner Door	239-43968-18	239-43968-20	239-43968-18	239-43968-18	239-43968-20	239-43968-20
26	Screw-#10-12 x 3/4 HWH	239-44113-00	239-44113-00	239-44113-00	239-44113-00	239-44113-00	239-44113-00
27	Outer Door	239-43962-00	239-43962-00	239-43962-00	239-43962-00	239-43962-00	239-43962-00
28	Brass Drain Valve	415-42351-02	415-42351-02	415-42351-02	415-42351-02	415-42351-02	415-42351-02
29	Flammable Vapor Sensor	415-45560-00	415-45560-00	415-45560-00	415-45560-00	415-45560-00	415-45560-00
30	Flammable Vapor Sensor Clip	239-45648-00	239-45648-00	239-45648-00	239-45648-00	239-45648-00	239-45648-00
31	Gas Valve (Natural Gas)	415-48795-02	415-48795-02	415-48795-02	415-48795-04	415-48795-02	415-48795-04
	Gas Valve (LP Gas)	415-48796-02	415-48796-02	415-48796-02	415-48796-04	415-48796-02	415-48795-04
32	Flammable Vapor Sensor Harness	239-49791-00	239-49791-00	239-49791-00	239-49791-00	239-49791-00	239-49791-00
33	Flue Core	---	---	---	---	239-47658-00	239-47658-00
34	Air Inlet Relief Device	239-48391-00	239-48391-00	239-48392-00	239-48392-00	239-48392-00	239-48392-00
35	Inner Door Gasket Kit	239-44078-00	239-44078-00	239-44078-00	239-44078-00	239-47792-00	239-47792-00
36	Heat Trap Insert Kit (Inlet & Outlet)	265-51572-00	265-51572-00	265-51572-00	265-51572-00	265-45420-00	265-45420-00
37	ASSE Approved Mixing Valve (Optional)	239-51778-00	239-51778-00	239-51778-00	239-51778-00	239-51778-00	239-51778-00
38	Condensate Hose Kit (Optional)	415-45875-00	415-45875-00	415-45875-00	415-45875-00	415-45875-00	415-45875-00

*Applies to all warranties

Please order the specific component required for the quickest delivery.

▲Order with item 10

Anode may need to be cut to length; see end of this parts list for further information.

▲▲Order with item 13

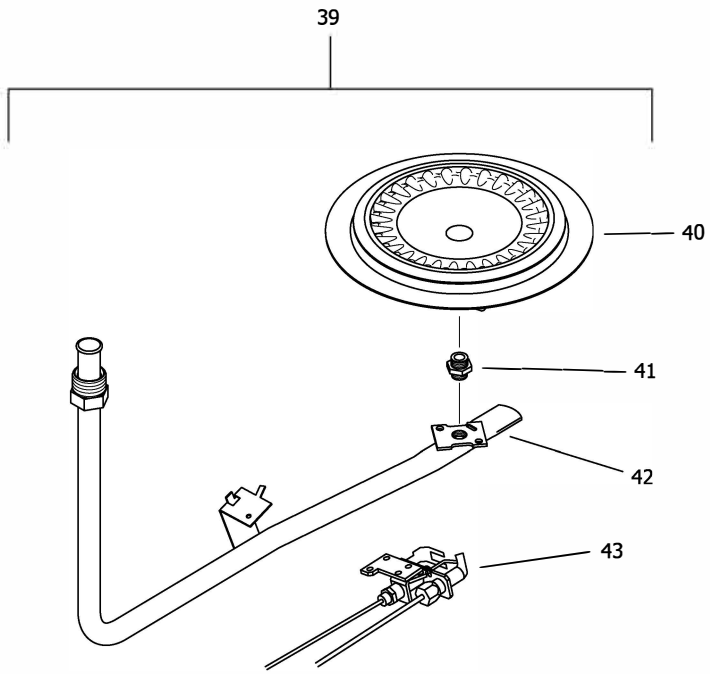

NATURAL GAS BURNER ASSEMBLY

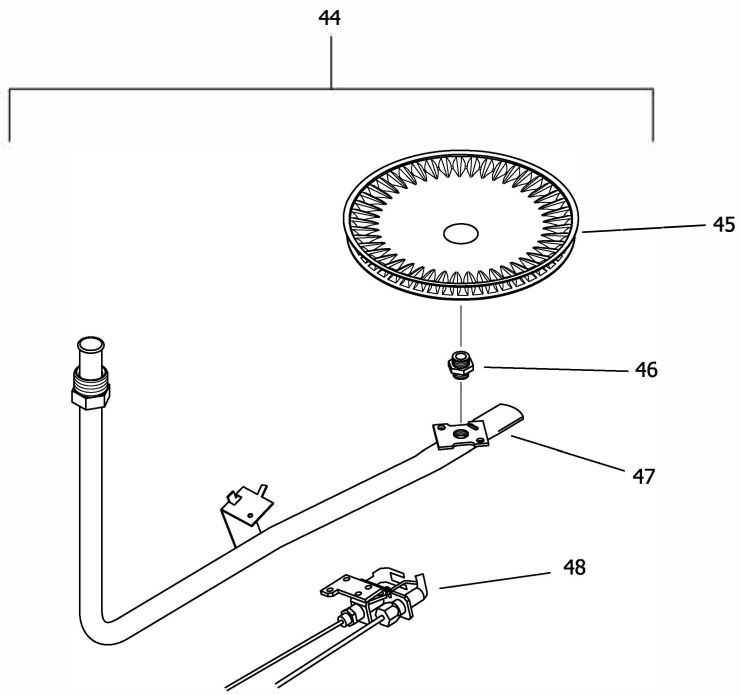

LP GAS BURNER ASSEMBLY

BRADFORD WHITE®
WATER HEATERS

Item	Description	Model RG2PDV40S*	Model RG2PDV50S*	Model RG2PDV50H*	Model LG2PDV50H*	Model RG2PDV75H*	Model LG2PDV75H*
	NAT Gas Burner Assembly						
39	Nat. Gas Burner Assembly Complete***	265-47785-02-32	265-47785-03-32	265-47784-02-28	265-47784-02-28	265-51383-01-20	265-51383-01-20
40	Nat. Gas Burner**	228-47000-00	228-47000-00	228-42506-00	228-42506-00	228-42506-00	228-42506-00
41	Nat. Gas Main Burner Orifice 0 Ft. to 2,000 Ft.**	234-41034-32	234-41034-32	234-41034-28	234-41034-28	234-41034-20	234-41034-20
	Nat. Gas High Altitude Orifice 2,100 Ft. to 7000 Ft. (-475 model suffixes) **	234-41034-36	234-41034-36	234-41034-30	234-41034-30	234-41034-26	234-41034-26
	Nat. Gas High Altitude Orifice Kit 2,100 Ft. to 10,000 Ft.	265-51380-06-40	265-51380-06-40	265-51380-06-31	265-51380-06-31	265-51380-02-29	265-51380-02-29
42	Nat. Gas Feedline	233-47374-02	233-47374-03	243-47784-02	233-47374-02	233-47374-04	233-47374-04
43	Nat. Gas Pilot Assembly**	415-45653-05	415-45653-05	415-45653-05	415-45653-05	415-45653-05	415-45653-05
	LP Gas Burner Assembly						
44	LP Gas Burner Assembly Complete***	265-47917-02-49	265-47917-03-49	265-47376-01-44	265-47376-01-44	265-47376-03-39	265-47376-03-39
45	LP Gas Burner**	228-46964-00	228-46964-00	228-47000-00	228-47000-00	228-47000-00	228-42506-00
46	LP Gas Main Burner Orifice 0 Ft. to 2,000 Ft.**	234-47064-49	234-47064-49	234-47064-44	234-47064-44	234-47064-39	234-47064-39
	LP Gas High Altitude Orifice 2,100 Ft. to 7,000 Ft. (-475 model suffixes) **	234-47064-51	234-47064-51	234-47064-47	234-47064-47	234-47064-43	234-47064-43
	LP Gas High Altitude Orifice Kit Over 7,000 Ft. to 10,000 Ft.	265-51433-05-52	265-51433-05-52	265-51433-05-49	265-51433-05-49	265-51433-01-44	265-51433-01-44
47	LP Gas Feedline	233-47672-02	233-47672-03	233-47672-02	233-47672-02	233-47672-04	233-47672-04
48	LP Gas Pilot Assembly**	415-45653-04	415-45653-04	415-45653-04	415-45653-04	415-45653-04	415-45653-04
	LP to Natural Gas Conversion Kit Norm Alt. 0 Ft. to 2,000 Ft.	265-46493-94	265-46493-95	265-46493-49	265-46493-112	265-46493-113	265-46493-115
	LP to Natural Gas Conversion Kit (High Alt.) 2,100 Ft. to 7,000 Ft.	265-46493-110	265-46493-111	265-46493-57	265-46493-60	265-46493-114	265-46493-116

*Applies to all warranties
**Inner door gasket kit (item# 35) recommended
***Ordering a complete burner assembly may increase delivery time.
Please order the specific component required for the quickest delivery.

BRADFORD WHITE®
WATER HEATERS

United States

Sales	1-800-523-2931
Technical Support	1-800-334-3393
Email	*techsupport@bradfordwhite.com*
Warranty	1-800-531-2111
Email	*warranty@bradfordwhite.com*
Service Parts	1-800-538-2020
Email	*parts@bradfordwhite.com*

Canada

Sales	1-866-690-0961 1-905-203-0600
Fax	905-636-0666
Warranty	1-800-531-2111
Email	*warranty@bradfordwhite.com*
Technical Support	1-800-334-3393
Email	*techsupport@bradfordwhite.com*
Service Parts and Orders	*ca.orders@bradfordwhite.com*

For U.S. and Canada field service, contact your professional installer or local Bradford White sales representative.

International

General Contact	*international@bradfordwhite.com*

©2024, Bradford White Corporation, USA. All rights reserved.