B300M

NSF 8-2010

Starting with Serial Number 13467

GRAVITY FEED FOOD SLICER

INSTALLATION, USE, MAINTENANCE
& PARTS MANUAL

REVISED 12-16-15

WWW.BIROSAW.COM
THE BIRO MANUFACTURING COMPANY, 1114 W. MAIN ST.,
MARBLEHEAD, OH 43440-2099 U.S.A.

Model:

B 300 M

s/n: _____

Compliant to NSF/ANSI Standard 8: Commercial powered food preparation equipment.

This machine was designed and built to slice food in compliance to the norms of the 89/392 - 89/336 Directive and following amendments CE 91/368 - 93/44 - 93/68 CE, EN 1974 directive 89/109.

*Materials and objects destined to the food products contact directive (89/109 CEE) and subsequent modification (2002/72/CEE)

*EN 60204-1 Machines electrical equipments

*EN 60335-2-64 Particular requisition for kitchen machines

*UNI EN 1974 Machines for food industries – Slicing Machines
-Security and hygiene features

CONTENTS

FOREWORD
SCOPE OF THIS MANUAL

GENERAL INFORMATION
GENERAL SAFETY REGULATIONS
MANUFACTURER'S WARRANTY AND LIABILITY
PLATES – CONFORMITY MARKS
ENVIRONMENTAL CONDITIONS OF USE

PACKING
OPENING THE BOX

TECHNICAL DESCRIPTION AND PROPOSED CONDITIONS OF USE
GENERAL DESCRIPTION
MECHANICAL AND ELECTRICAL SAFETY DEVICES
WARNING: RESIDUAL RISKS
DIMENSIONS
MAIN TECHNICAL DATA
SUPPLIED LITERATURE AND ACCESSORIES
PRODUCTS THAT CAN BE SLICED
PRODUCTS THAT MUST NOT BE SLICED:
MAIN COMPONENTS

MACHINE COMMISSIONING AND FUNCTION TESTS
INSTALLING THE MACHINE
ELECTRICAL CONNECTION
CONTROLS
FUNCTIONING TEST AND BLADE ROTATION DIRECTION

USING THE MACHINE
LOADING THE PRODUCT ON THE TRAY AND SLICING

CLEANING THE SLICER (1)
GENERAL
DISASSEMBLING THE MACHINE FOR CLEANING

CLEANING THE SLICER (2)
REASSEMBLING THE MACHINE

MAINTENANCE
GENERAL
BLADE SHARPENING
SHARPENING INSTRUCTIONS
LUBRICATION

TROUBLESHOOTING AND REMEDIES

DISMANTLING THE SLICER

ELECTRICAL DIAGRAM

RECOMMANDED SPARE PARTS

FOREWORD

SCOPE OF THIS MANUAL

This manual contains all the necessary information to install, use and service the gravity slicers for food (please see models in paragraph "Technical Description"). The scope of this document, hereinafter the "manual", is to permit users, and especially end users, to take all the cautions and provisions possible for using this machine safely and for a long period of time.

GENERAL SAFETY REGULATIONS

The slicer must only be used by trained personnel. Furthermore, they must have read this manual carefully.

In particular, please comply to the following instructions

- Install the machine according to the instructions contained in the "Installation" section.
- Do not remove the transparent protections, do not modify nor exclude the mechanical and electrical safety devices.
- Do not use the machine with improvised connections, or provisional or non - insulated cables.
- Check the power cable and gland plate on the machine body regularly, and when necessary have them replaced by a qualified personnel.
- In case of abnormalities, defective operation, incorrect movement, unusual noise, etc stop the machine immediately.
- Before cleaning or servicing, disconnect the machine.
- Always use non-slip gloves during cleaning or maintenance.
- Lay or remove the goods to be sliced on the sliding plate only when the carriage is completely pushed back and the thickness control knob is positioned to 0.
- To move the carriage tray when slicing, use the handle or the product grip handle.
- For extraordinary maintenance (to replace the sharpening stones, the blade, or others) please contact the manufacturer or qualified and duly trained personnel.
- Avoid running the slicer with no product on it.
- The slicer is equipped with a ventilated motor.
- *WARRANTY: 1 YEAR except for the electrical parts*

MANUFACTURER'S WARRANTY AND LIABILITY

The manufacturer's warranty covering the functioning of the machine and their compliance to the service for which they have been designed, depends on the proper application of the instructions contained in this manual.

The Manufacturer assumes no liability either direct or indirect for:

- *Failure to comply with the instructions contained in this manual;*
- *Use of the machine by personnel who has not read or fully understood the content of this manual*
- *Use not complying to the specific norms currently applicable in the country of installation*
- *Improper use*
- *Use of non original accessories or spare parts.*
- *Exceptional events.*

PLATES – CONFORMITY MARKS

The machine has been constructed in compliance with the European Directive 89/392 and subsequent amendments. All the parts used in the machine meet the terms of the Directive and the CE marks have been applied to substantiate this compliance.
The plate carrying the Manufacturer's data, the machine data and the CE mark are applied onto the machine base under the blade guard tie-rod knob.

In case of wear or damage, the user must replace it.

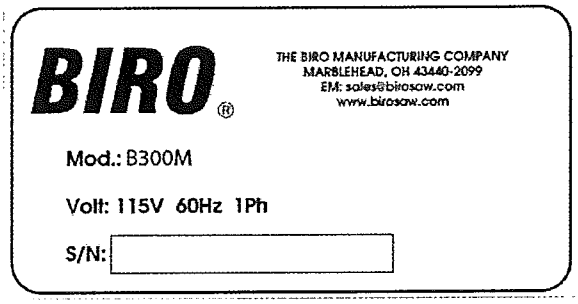

ENVIRONMENTAL CONDITIONS OF USE

- *Temperature* ..... from -5 °C to + 40 °C
- *Relative humidity* ..... max 95%

PACKING

OPENING THE BOX

On receipt, check packaging integrity, otherwise inform the forwarding agent or the area agent immediately.

To unpack the machine, proceed as follows:

- Open the box and remove the manual of use and maintenance, then proceed according to the instructions found in it;
- Lift the machine still wrapped in a transparent polythene sheet.
- Now check the box contents and make sure it corresponds to what is shown on the external label.

WARNING:

The packaging components (cardboard, polythene, and others) are classified as normal solid urban waste and can therefore be disposed of without difficulty. ***In any case, for suitable recycling, we suggest disposing of the products separately (differentiated waste) according to the current norms.***

DO NOT DISCARD ANY PACKAGING MATERIALS IN THE ENVIRONMENT!

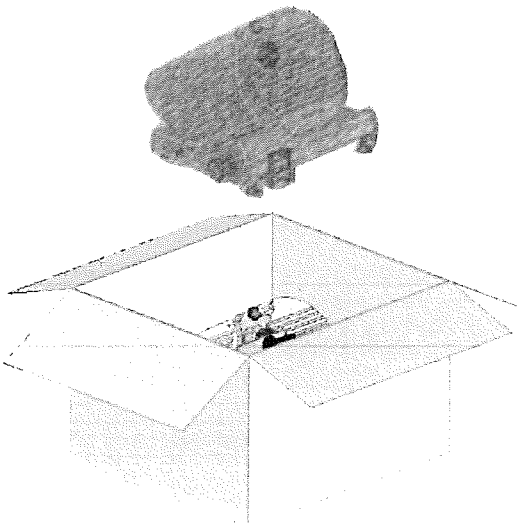

TECHNICAL DESCRIPTION AND PROPOSED CONDITIONS OF USE

GENERAL DESCRIPTION

The machine is essentially made of a base supporting, a circular blade mounted in a tilted position. This blade is driven by an electrical motor to slice food. The machine is equipped with a carriage holding, a product tray and sliding on tracks mounted under the base top, parallel to the blade.
Slice thickness is adjusted by a gauge plate mounted in front of the blade. This plate is moved transversally with respect to the blade up to the desired slice thickness.
All the machine components are made of polished and anodized oxidized aluminium alloy, of stainless steel and food grade plastic material.
The blade is driven by an electrical motor, the transmission by a grooved belt.
The machine is started and stopped by control buttons provided with auxiliary circuit preventing accidental restarts after an outage.
Some of the machine models have a user-friendly and safe built-in blade sharpener.

MECHANICAL AND ELECTRICAL SAFETY DEVICES

The following mechanical safety devices are installed:

- aluminium hands protection on the carriage
- ring covering the edge of the blade

The following electrical safety devices are installed:

- Start/stop button system requiring a voluntary restart of the machine in the case of an outage or interruption of the power supply.

WARNING: RESIDUAL RISKS

Not with standing all the possible cautions taken during the design and the construction of the machine, residual risks (cutting) still exist during use or during cleaning or maintenance. Therefore be careful and PAY THE UTMOST ATTENTION to what you are doing.
DO NOT use the machine if you are not in perfect psychological and physical conditions. DO NOT ALLOW anyone near the machine when it is in use. ALWAYS wear gloves that can resist cuts or tears when cleaning, lubricating or sharpening the blade.
Slice only the products mentioned as sliceable. NEVER try to slice products that have been mentioned as non sliceable.

DIMENSIONS / MAIN TECHNICAL DATA

BIRO MOD. B300M

GRAVITY SLICER

MODEL	B300M		MODEL
motor kw	0,35		motor kw
blade diam inch	12"	300	blade diam mm
rpm	220		rpm
slice thickness inch	0 – 0.8"	0 – 20	slice thickness mm
max cut inch ○	9.50"	240	max cut mm ○
max cut inch ▭	7" x 9,5"	180 x 245	max cut mm ▭
Overall dimensions inc			**Overall dimensions mm**
length	18"	470	length
width	25"	620	width
height	17"	370	height
gross weight-Lbs	57	26	gross weight - kg
net weight-Lbs	46	21	net weight - kg
box dimensions inch	24"x28"x22,5"	610 x 710 x 570	box dimensions mm.

SUPPLIED LITERATURE AND ACCESSORIES

If not otherwise defined at the moment of order, the machines are supplied ogether with the following:

- Instructions manual for installation, use and maintenance.
- ETL NSF CSA
- EU conformity declaration

PRODUCTS THAT CAN BE SLICED

- All types of cold cuts (raw, cooked, smoked);
- Meat without bone (raw or cooked, at a temperature not less than + 3 °C);
- Cheese cuts (obviously types that can be sliced such as gruyere, mozzarella, etc.).

PRODUCTS THAT MUST NOT BE SLICED:

1. Frozen or deep-frozen food;
2. Food containing bones (meat or fish);
3. Any other non-food product

MAIN COMPONENTS

B300M

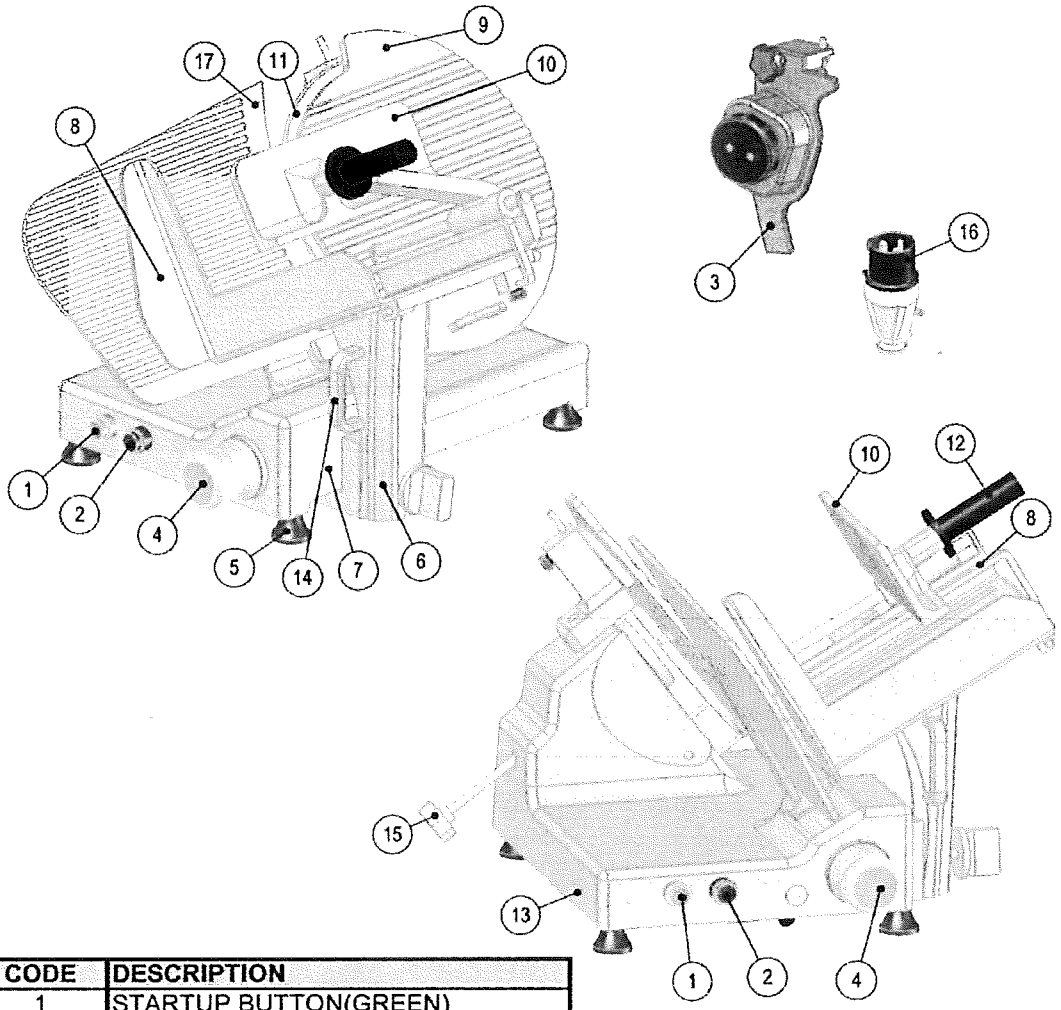

CODE	DESCRIPTION
1	STARTUP BUTTON(GREEN)
2	STOP BUTTON (RED)
3	SHARPENER
4	SLICE THICKNESS CONTROL KNOB
5	ADJUSTABLE FOOT
6	CARRIAGE TRAY SUPPORT
7	BASE
8	PRODUCT TRAY
9	BLADE PLATE
10	PRODUCT GRIP
11	BLADE
12	PRODUCT GRIP HANDLE
13	MANUFACTURED IDENTIFICATION
14	CARRIAGE TRAY KNOB
15	BLADE PLATE TIE-ROD
16	SUPPLY CORD
17	GAUGE PLATE

MACHINE COMMISSIONING AND FUNCTION TESTS
INSTALLING THE MACHINE

Position the machine on a well leveled, smooth and dry top suitably dimensioned to withstand the machine weight.

ELECTRICAL CONNECTION

Install the machine near a USA compliant outlet derived from a system meeting the current norms.
The user is responsible for ascertaining that the electrical system is suitably dimensioned and functions correctly (supply line, outlet, distribution panel, differential protecting breaker, grounding).
Before carrying out the connection ascertain that the mains characteristics correspond to those indicated on the machine plate.

COMMANDS

START AND STOP BUTTONS

- Press the green button (1) to start running the blade.
- The light turns on to indicate that the machine works correctly.
- Press the red button to stop the blade (2).

Slice thickness can be adjusted by turning the graduated knob (3) anti clockwise.

Thickness adjustment range: see paragraph "Technical description and conditions of use".

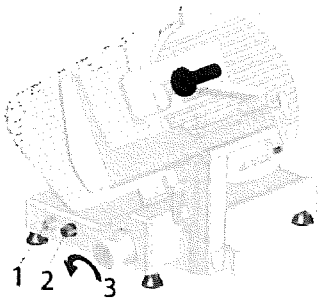

FUNCTIONING TEST AND BLADE ROTATION DIRECTION

Start the machine and check whether the light is on; make sure that the blade rotates in the direction indicated by the arrow (anti clockwise if you look at the machine from the blade plate side).

- Ascertain that the carriage and the pusher slide correctly;
- Ascertain that the gauge plate works and adjust thickness to desired value.

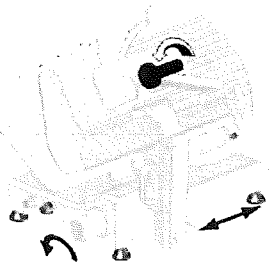

USING THE MACHINE B300M

LOADING THE PRODUCT ON THE TRAY AND SLICING

- Ascertain that the adjustable knob is correctly positioned to '0'.
- Draw back the carriage completely (towards the operator) to loading position.
- Lift the pusher by pulling it away from the blade and put it in the rest position.
- Lay the product to be sliced against the gauge plate on the operator side.
- Secure the pusher by exerting slight pressure.
- Adjust the thickness gauge plate. Start the blade by pressing on the green button.
- Grip the handle affixed onto the plate and start the forward and backward cutting movement. The product travels towards the gauge plate by gravity.
- When the product weight or its dimensions do not provide a satisfactory cut by effect of the gravity, use the pusher handle.
- When finished, return the adjustable knob to '0' and pull the carriage back.
- Stop the blade by pressing the red button.

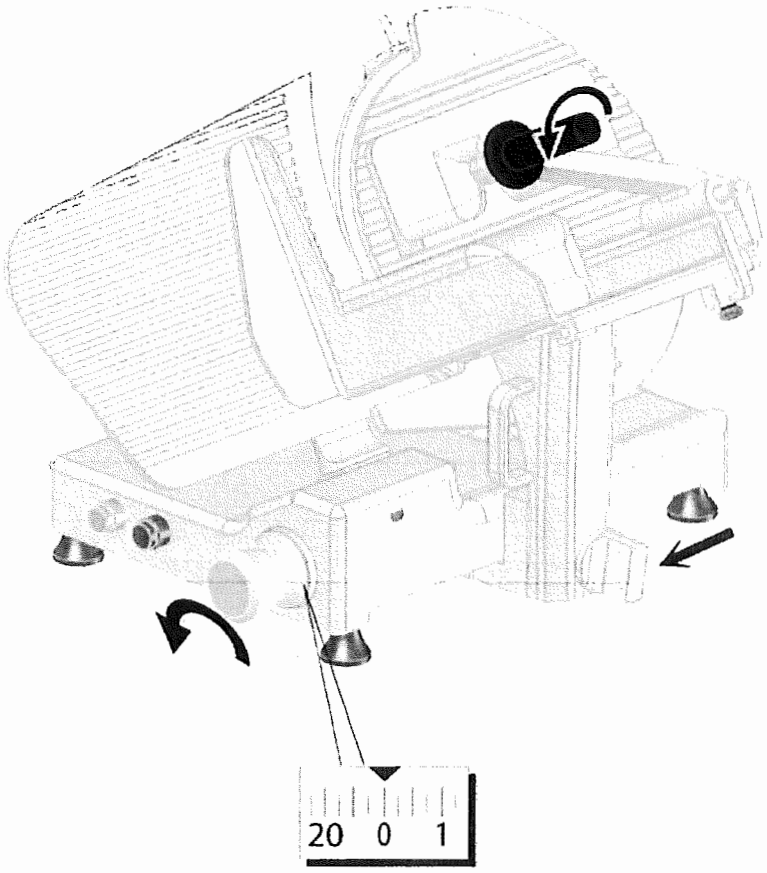

CLEANING THE SLICER B300M (1)

GENERAL

The machine must always be carefully cleaned **at least once a day**, and more often if necessary.
Always use protective gloves.

DISASSEMBLING THE MACHINE FOR CLEANING

- Disconnect the plug from the mains;
- Turn the gauge plate to '0';
- Remove the various components as described in the following paragraphs:
- Unscrew (anticlockwise) the blade guard rod (ref. 1);
- Remove the blade guard using for this operation only cover handle.
- Remove the slice guard.

To clean the machine body and the blade use only a damp cloth with water and biodegradable soapy detergent having 7-8 pH and at a temperature not below + 30°C.

WARNING:

Use scratch-proof and non-slip gloves to carry out the following operations. Proceed carefully and pay attention to what you are doing.
Danger of cutting!

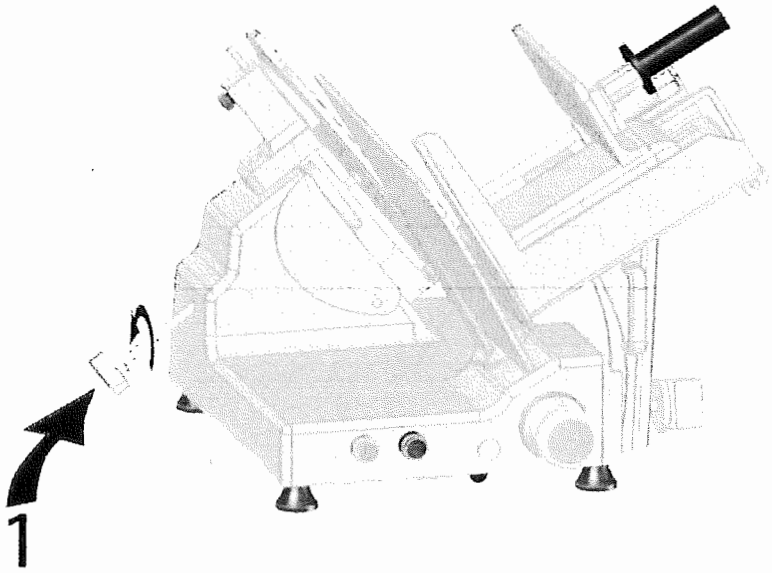

CLEANING THE SLICER B 300 M (2:UPSETTING PLATE)

- Stop the machine, rotate the adjustable knob to regulate the gauge plate and position it on 0 (1)
- Return the carriage to the operators side (2)
- Turn the knob (3) anti clockwise, until loose, the carriage will then drop back for cleaning (4).

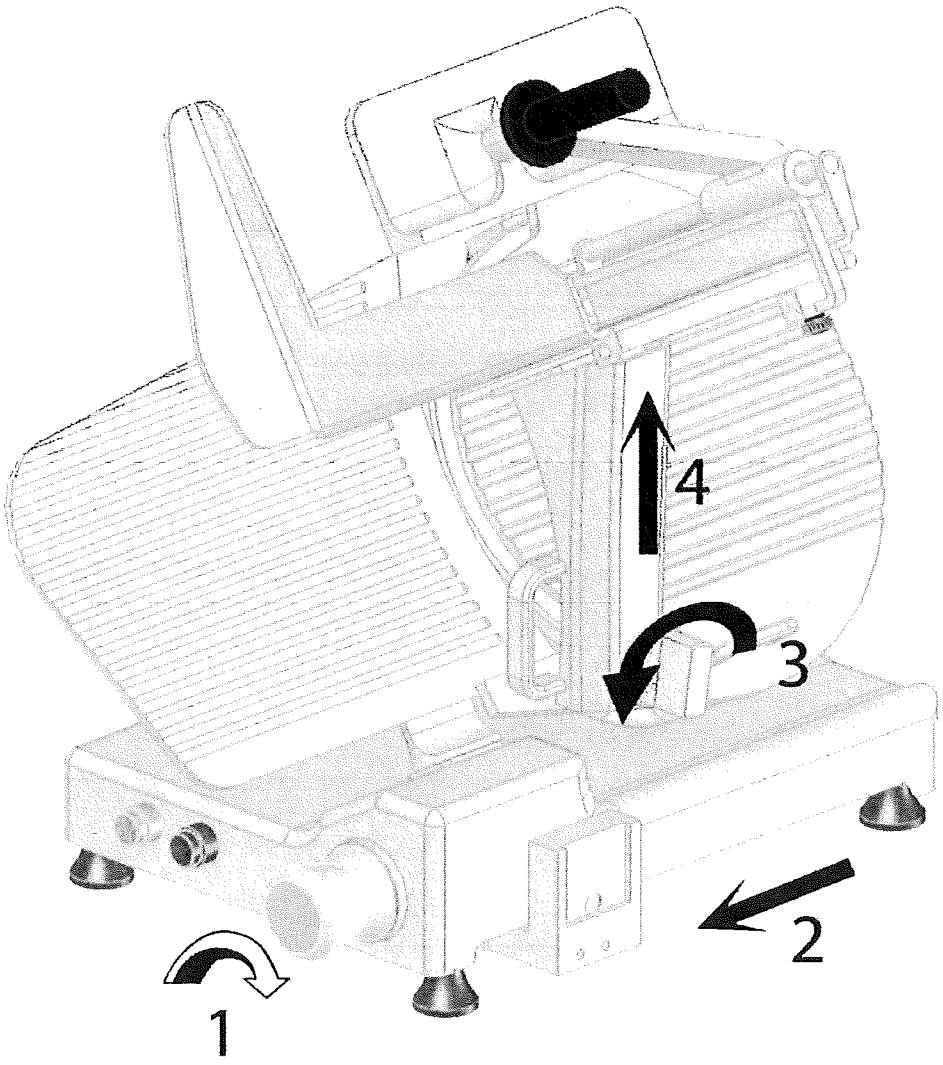

REASSEMBLING THE MACHINE

Proceed as indicated for the previous operations but in reverse order.

MAINTENANCE

GENERAL

The operator is allowed to perform the following maintenance operations:

- **Blade sharpening:** regularly (intervals and duration obviously depend on the use of the machine, time of use and type of product sliced);
- **Lubrication of carriage sliding guides:** once a week.
- **Lubrication of product grip sliding bar:** once a week.
- **Checking the power supply wire conditions and the gland plate:** from time to time.

WARNING

Maintenance must always be carried out when the ***machine is disconnected from the mains.***
Always make sure that the adjustable knob is in the "O" position

The following maintenance operations are to be entrusted only to ***personnel authorised by the manufacturer:***

- **Replacing the blade;**
- **Replacing the sharpening stones;**
- **Replacing the motor transmission belt;**
- **Replacing electrical system components under the machine frame;**
- **Repairing structural parts, repairing the components under the frame.**

BLADE SHARPENING

Before proceeding, carefully clean the machine as explained in the previous paragraphs:

WARNING

Sharpening can be done only up to 0,5 inches of the blade diameter value.
Beyond this value, the BLADE MUST BE REPLACED ONLY by personnel AUTHORISED BY THE MANUFACTURER.

SHARPENING

Version with NOT INTEGRATED sharpener

To sharpen the blade periodically and proceed as per the following instructions:

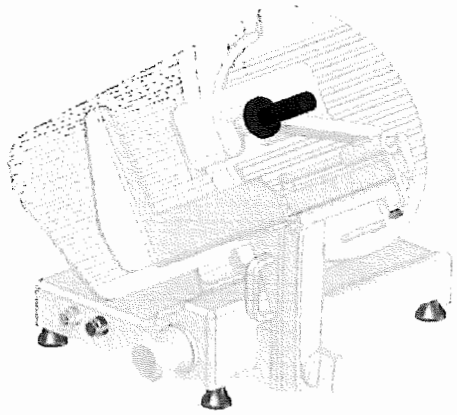

1) CLEAN THE BLADE

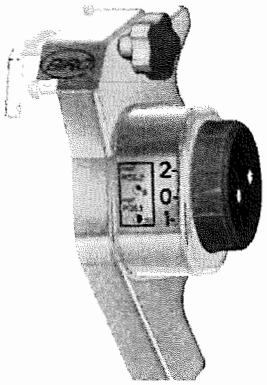

2) ASSURE THE SHARPENER IS AT ZERO POSITION

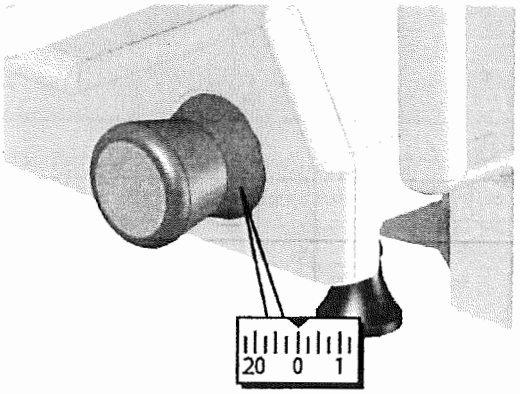

3) MOVE THICKNESS REGULATOR TO THE 20mm

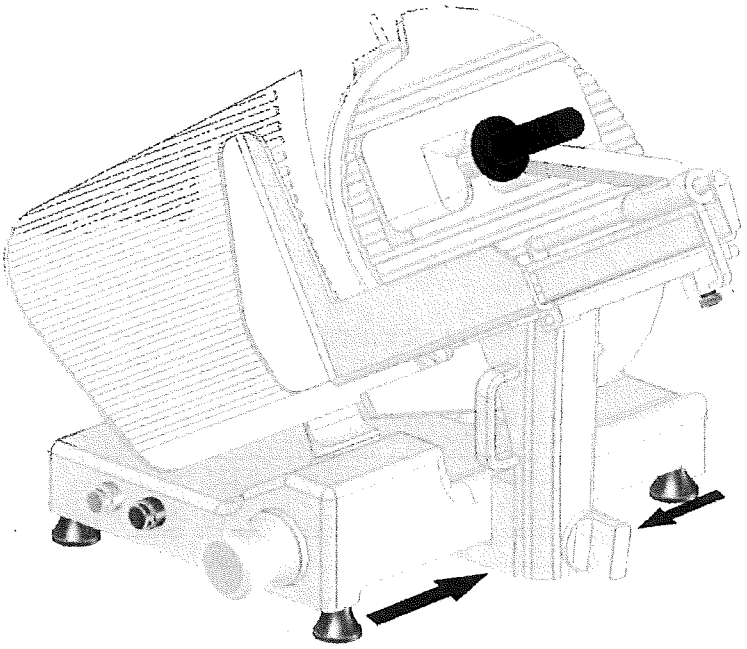

4)THIS OPENED THE BLADE TO THE DESIRED POSITION READY FOR POSITIONING THE SHARPENER.
MEAT PLATE POSITIONED IN THE MIDDLE.

5)THE SMALL RECESS ON THE GAUGE PLATE IS FOR THE POSITIONING OF THE SHARPENING MECHANISM.

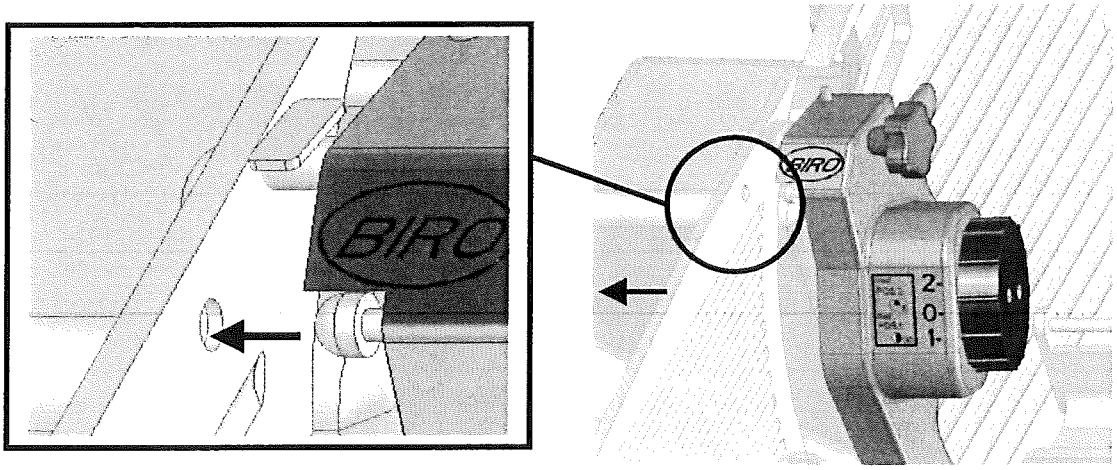

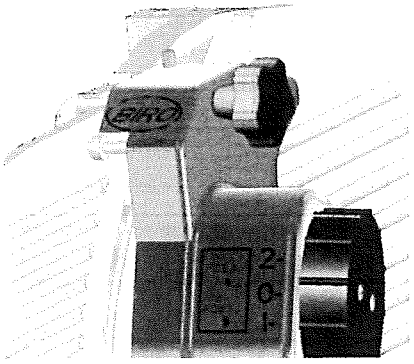

PLACE SHARPENING MECHANISM ONTO PLATE.

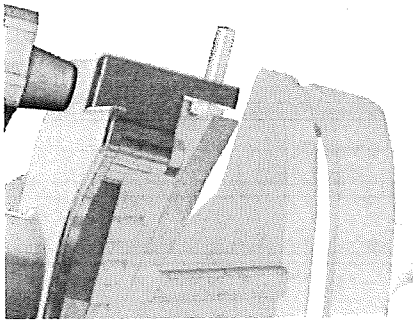

6) VERIFY POSITION

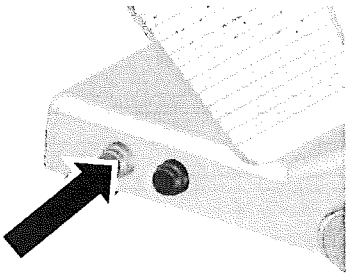

7)START BLADE ROTATING.

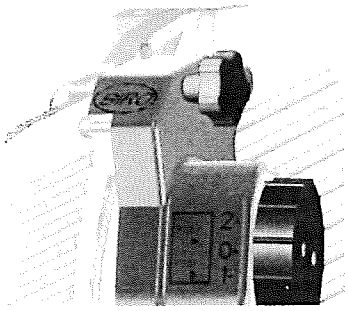

8)TURN DIAL TO POSITION 1. THIS WILL SHARPEN THE REAR OF THE BLADE.
RUN FOR 20 SECONDS, TURN DIAL TO POSITION 2 FOR 5 SECONDS. THIS WILL TAKE THE BURR OF THE FRONT SURFACE OF BLADE

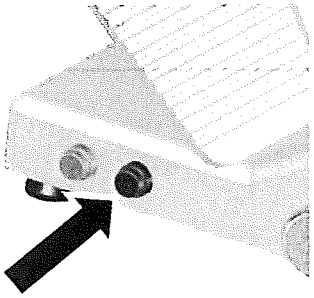

9)STOP MACHINE.
REMOVE SHARPENER AND CLEAN BLADE BEFORE USING THE MACHINE AGAIN.

LUBRICATION

Carriage sliding guides pusher (once a week)

Use only the oil provided, otherwise <u>use food grade lubricant spray.</u>
<u>DO NOT USE VEGETABLE OILS.</u>

- Spread **a small quantity of oil** on the bar and move the assembly 3 or 4 times.
- Clean as required to remove excess of oil.

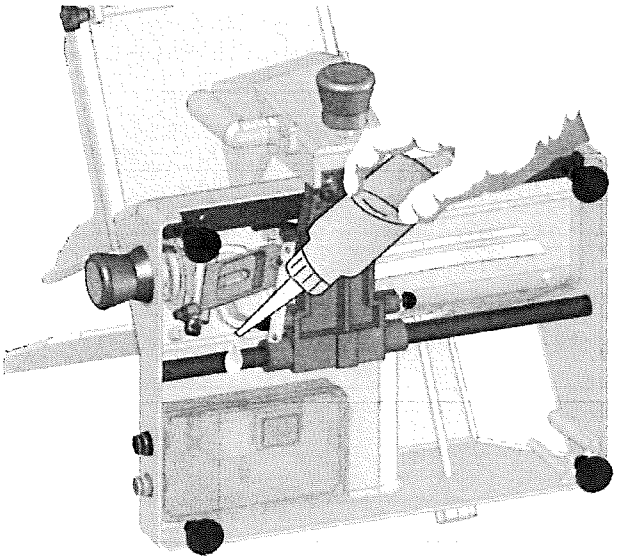

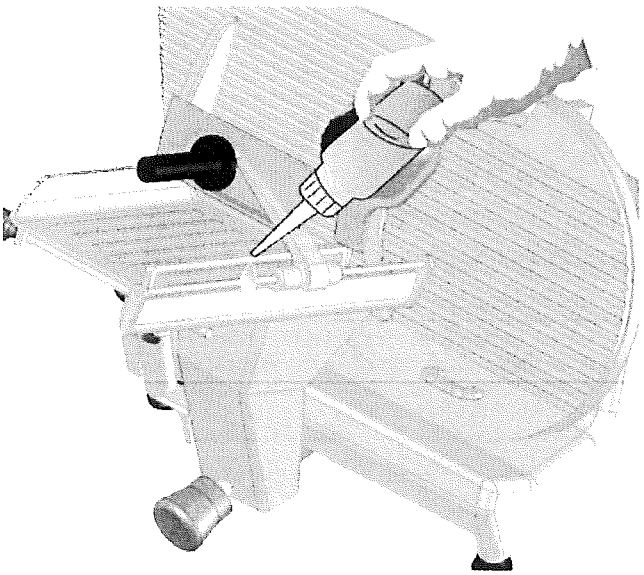

TROUBLESHOOTING AND REMEDIES

The table below indicates the most common problems that may arise during slicing and the necessary remedies.

PROBLEM	POSSIBLE CAUSE	REMEDY
The machine does not start when the green button is pressed	No power supply The blade guard is not correctly positioned. Defective electrical control circuit.	Ascertain that the plug is correctly inserted. Check Call technical assistance
The machine does not start, and there is continuous noise like a buzz only in the case of machines equipped with three-phase motors.	The motor is running on single-phase mode	Press the red button immediately and have the power supply cord and the circuits upstream verified by qualified personnel.
When the green button is pressed, the machine starts, but the white functioning light is not on.	Defective indicator	Do not use the machine when the pilot lamp is not on. Call technical assistance
The machine starts, but there are vibrations. The motor is very hot and there is a bad smell.	Defective motor or transmission.	Do not use the machine. Call technical assistance.
Under strain, the machine slows down or comes to a stop.	Defective transmission	Call technical assistance
Excessive resistance to product slicing.	The blade is blunt	Sharpen the blade
The slices are ragged and/or shaped irregularly	The blade is blunt The blade is excessively worn out	Sharpen the blade Call technical assistance
Unsatisfactory blade sharpening	Worn wheels	Replace the grinding stones. Call technical assistance
The product tray does not slide	Guides are insufficiently lubricated	Lubricate
When the red button is pressed, the machine does not stop	Defective electrical control circuit	Stop the machine, unplug from mains and call technical assistance

DISMANTLING THE SLICER

This machine is made of the following elements:

- *Aluminium frame;*
- *Stainless steel fittings and others;*
- *Electrical parts and wires;*
- *Electrical motor;*
- *Plastic materials, etc.*

Whether dismantling is entrusted to third parties or done in-house (in that last case you will have to separate the various materials) please note that disposal of the materials can only be carried out by duly authorised businesses.
In any case, please comply to the current norms of your country.

WARNING

In any case, to remove the blade and dispose of it, you must contact the manufacturer or personnel duly authorized by the manufacturer.
NEVER DISPOSE OF WASTE IN AREAS WHERE ACCESS IS NOT DELIMITED BY BARRIERS AND FORBIDDEN BY WARNING SIGNS AS THIS WASTE REPRESENTS A SERIOUS DANGER, ESPECIALLY FOR CHILDREN AND ANIMALS. ANY RESPONSIBILITY ARISING OUT OF INCORRECT DISPOSAL FALLS ON THE OWNER.

ELECTRICAL DIAGRAM

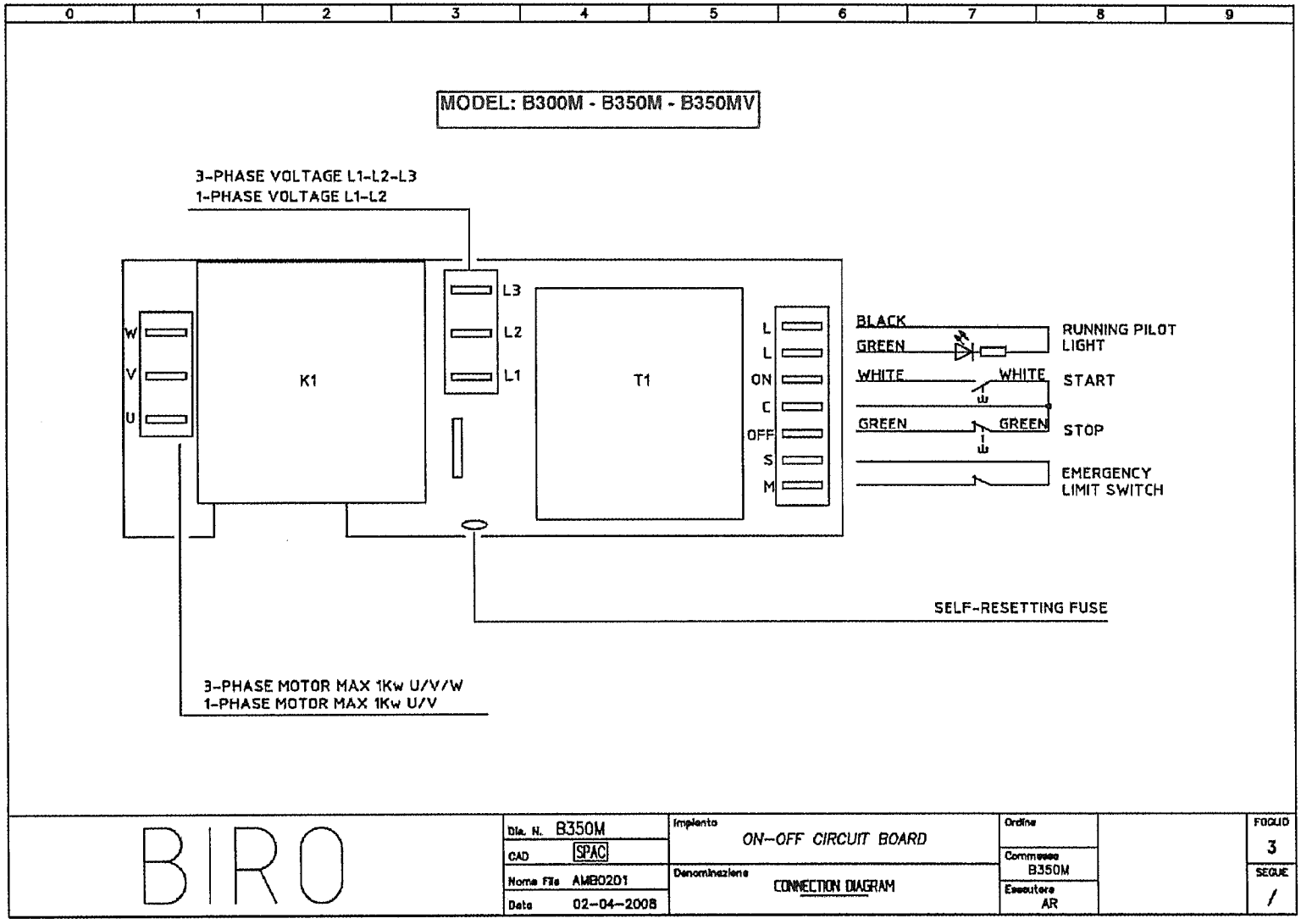

BIRO
Recommended Spare Parts
2013 EDITION

Z9MAF
Sharpening stone

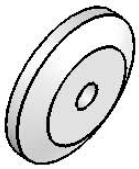

GRSTA
Electrical Box Assembly Mono-Phase 115V-60Hz
GRSTV ONLY B350A
Electrical Box Assembly Mono-Phase 115V-60Hz

Z9MSB
Cleaning stone

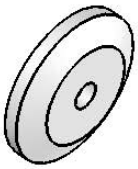

GRSTS
Electrical Box Assembly Mono-Phase 220V-50Hz

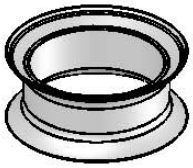

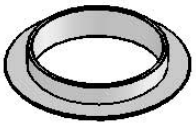

X0090 : B300M
G111-A : B350M-B350A-B350MV
Water-ring protection

Z9TCA
Mono phase card 115V-60Hz

Z12AMR ONLY B350A
Mono phase card 115V-60Hz

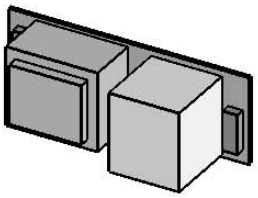

Z9SCH
Single phase card 220V-50Hz

B300M :
M9346 UP S/N 90764
G7CIN FROM S/N 90765

B350 M :
G5CIN UP S/N 80415
G8CIN FROM S/N 80416

B350 A :
G5CIN UP S/N 10801
G8CIN FROM S/N 10802

B350 MV :
G5CIN UP S/N 90732
G8CIN FROM S/N 90733

Trasmission Belt

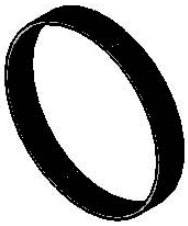

Z9PIE
Foot

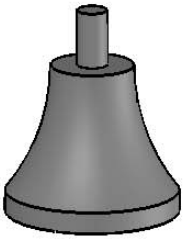

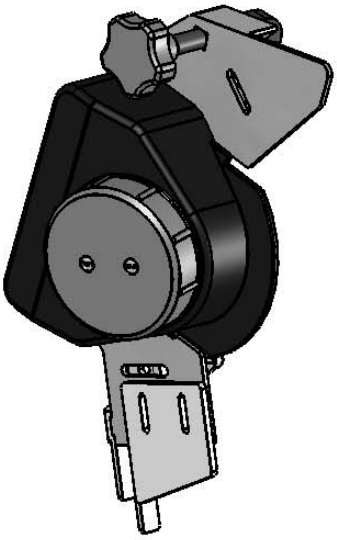

B300 M :
AF02US

B350M :
AF04US

B350 A :
AF01US

B350 MV :
AF03US

Sharpener

MODEL 300 :
G9310

MODEL 350 STND :
Z5L4G

MODEL 350 3rd GEN. :
Z5L3G

Blade

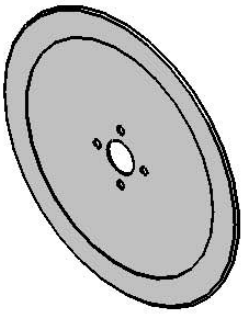

BIRO
Model B300M
Manual Slicer

STANDARD 8 - 2010

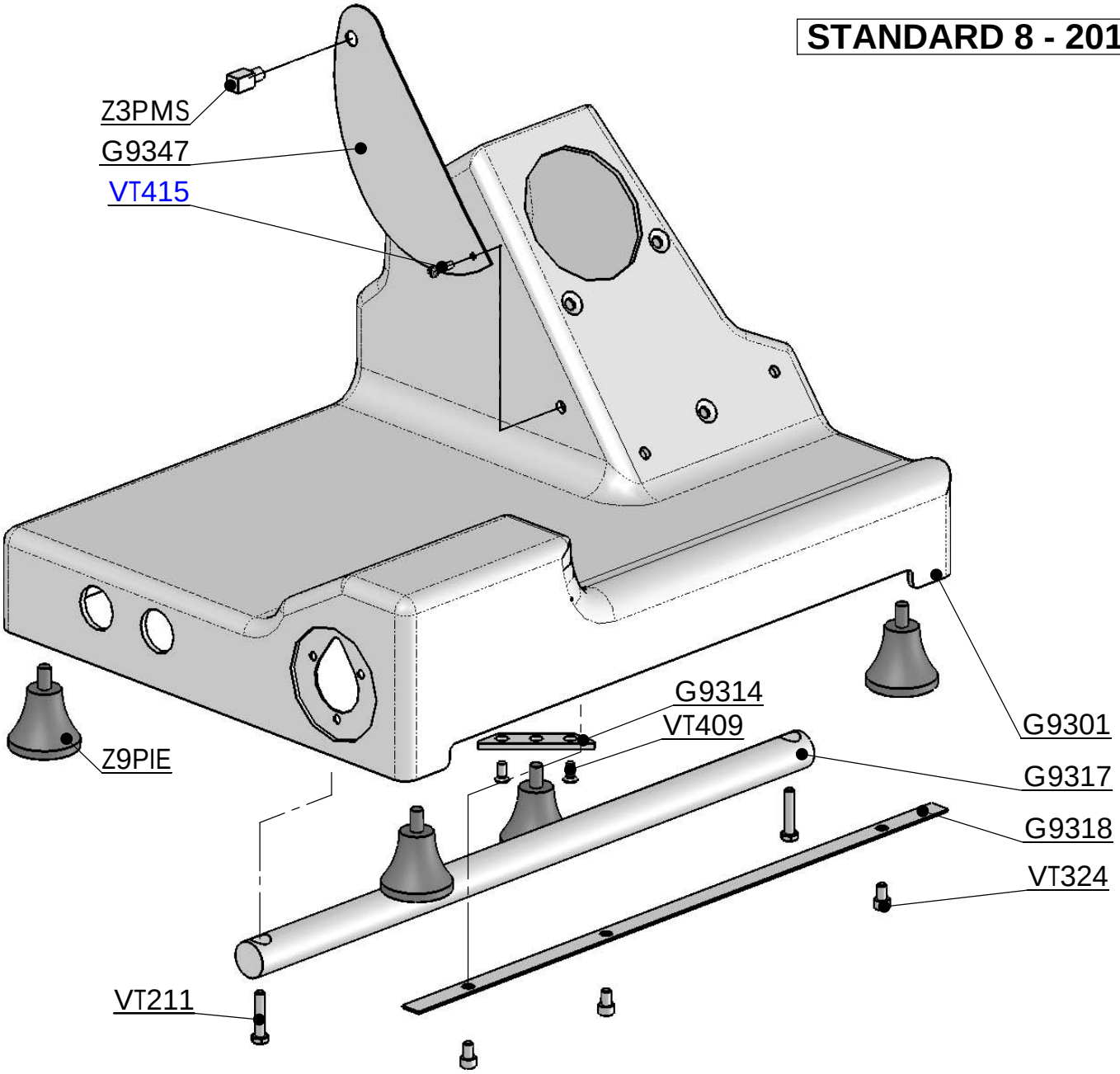

CODE	DESCRIPTION
G9301	FRAME
G9314	FOOT PLATE
G9317	SLIDING SHAFT 22x487
G9318	SQUARE SHAFT 30x8x425
G9347	SCRAPER
VT211	HEX HEAD SCREW M6-1.0x30 SS
VT324	HEX SOCKET HEAD SCREW M6-1.0x10 SS
VT409	CYLINDRICAL FLAT HEAD FOR SCREW DRIVER M5-0.8x12 SS
VT415	CYLINDRICAL FLAT HEAD FOR SCREW DRIVER M4-0.7x6 SS
Z3PMS	SCRAPER KNOB
Z9PIE	FOOT

BIRO
Model B300M
Manual Slicer

STANDARD 8 - 2010

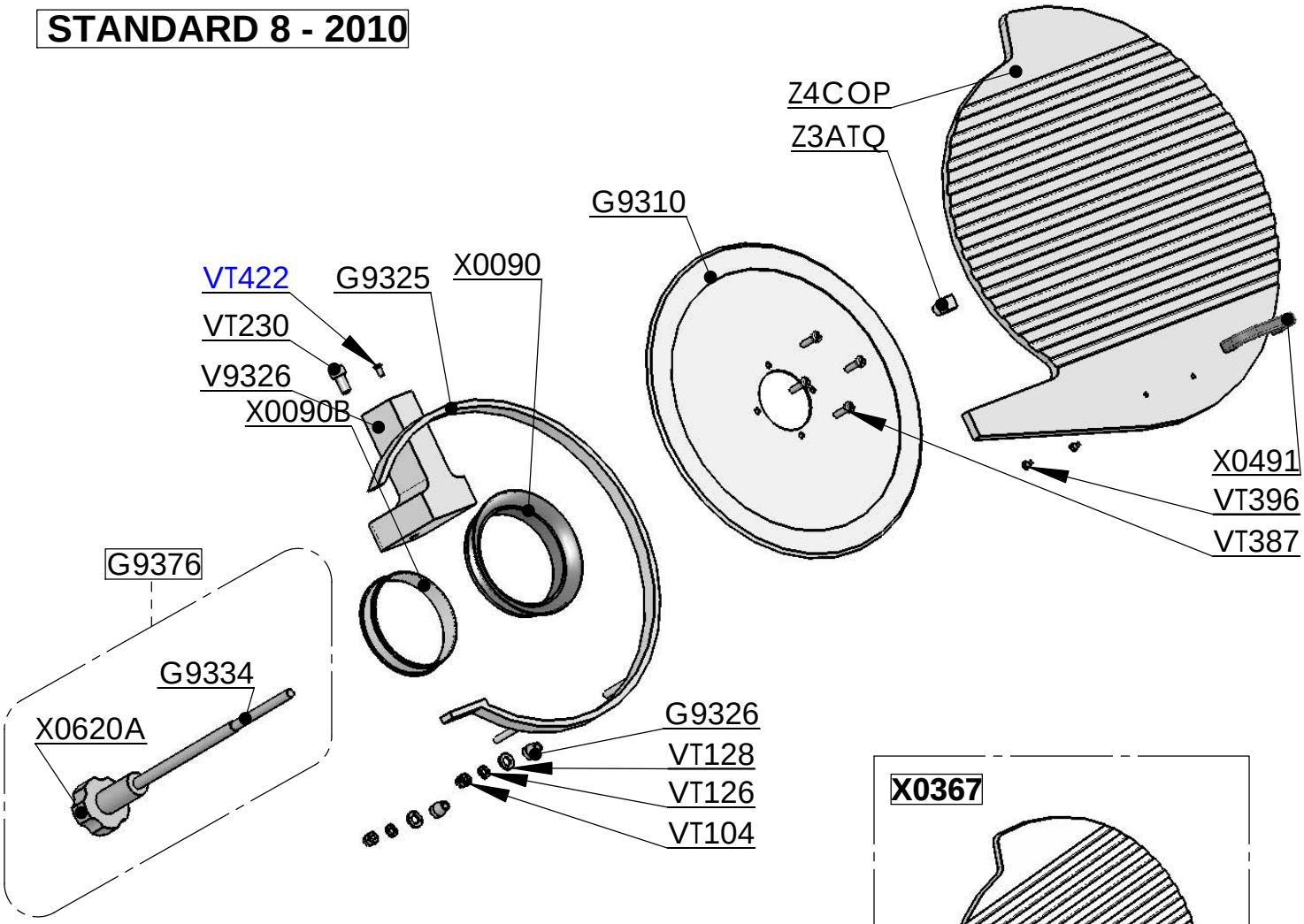

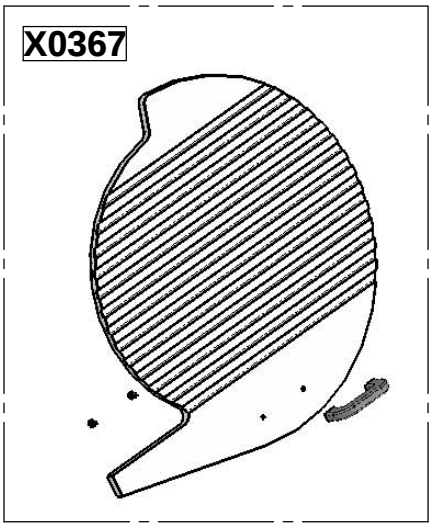

CODE	DESCRIPTION
G9376	BLADE GUARD ROD ASSY S8-2012
X0367	KNIFE GUARD - ASSEMBLY (Z4COP+VT396+X0491)
G9310	BLADE 300/57 mm
G9325	RING 9300 G
G9326	CONE SPACER D12x15
G9334	BLADE GUARD ROD 10/8x255
V9326	RING STUDBOLT
VT104	ACORN HEX CAP M6-1.0 SS
VT126	FLAT WASHER M6 SS
VT128	FLAT WASHER M10 SS
VT230	HEX HEAD SCREW M8-1.25x16 SS
VT387	SLOTTED OVAL COUNTERSUNK HEAD M5-0.8x16 SS
VT396	PHILLIPS FLAT COUNTERSUNK HEAD M4-0.7x8 SS
VT429	SLOTTED FLAT COUNTERSUNK HEAD M6-1.0x14 SS
X0090	SEAL
X0090B	INNER RING
X0491	HANDLE COVER BLADE
X0620A	PLATE ROD ALU KNOB D50/8G
Z3ATQ	BLADE GUARD LOCKING SCREW 12x12
Z4COP	BLADE GUARD

BIRO
Model B300M
Manual Slicer

STANDARD 8 - 2010

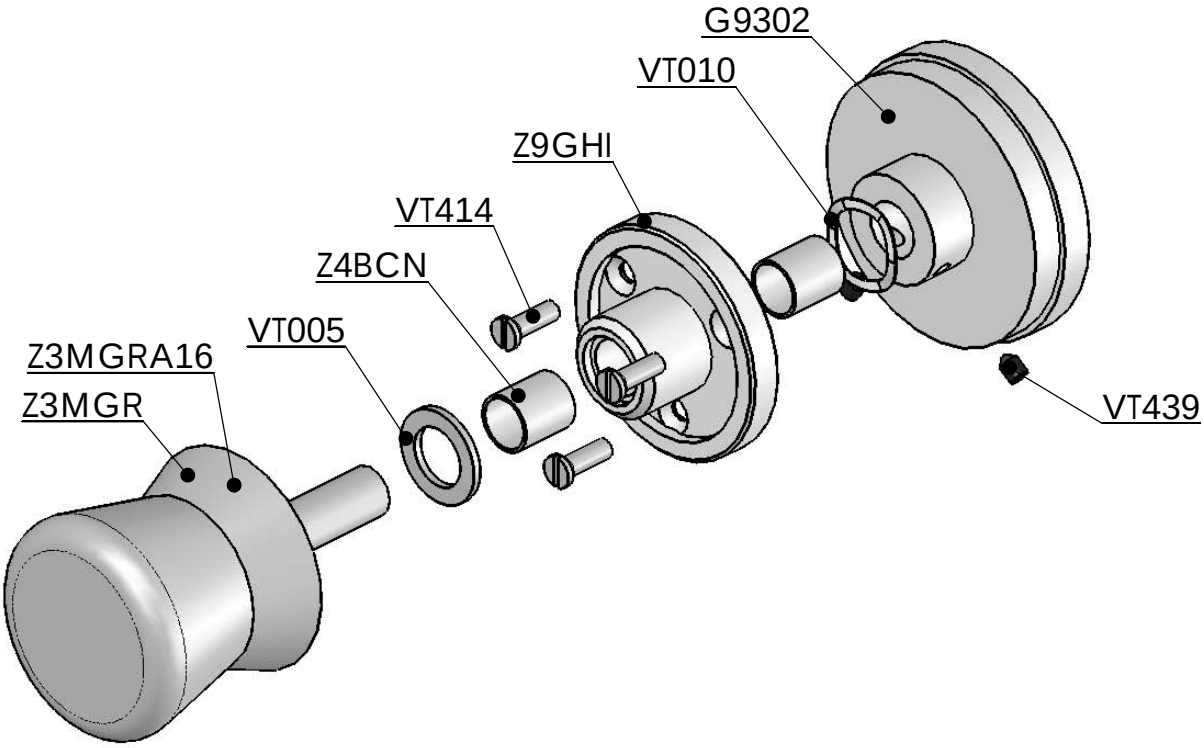

CODE	DESCRIPTION
G9302	CAM 8A
VT005	SPACER RING d. 18-25x1 SS
VT010	SPRING WASCHER d. d.18.5-32x0.3 BLACK
VT414	CYLINDRICAL FLAT HEAD FOR SCREW DRIVER M5-0.8x8 SS
VT439	HEX SOCKET SET SCREW CUP POINT M6-1.0x8 SS
Z3MGR	ADJUSTABLE PLASTIC KNOB 0:16
Z3MGRA16	ADJUSTABLE ALU KNOB 0:16
Z4BCN	BUSHING 18 - 20 - 15
Z9GHI	KNOB SPACER 76,6

BIRO
Model B300M
Manual Slicer

STANDARD 8 - 2010

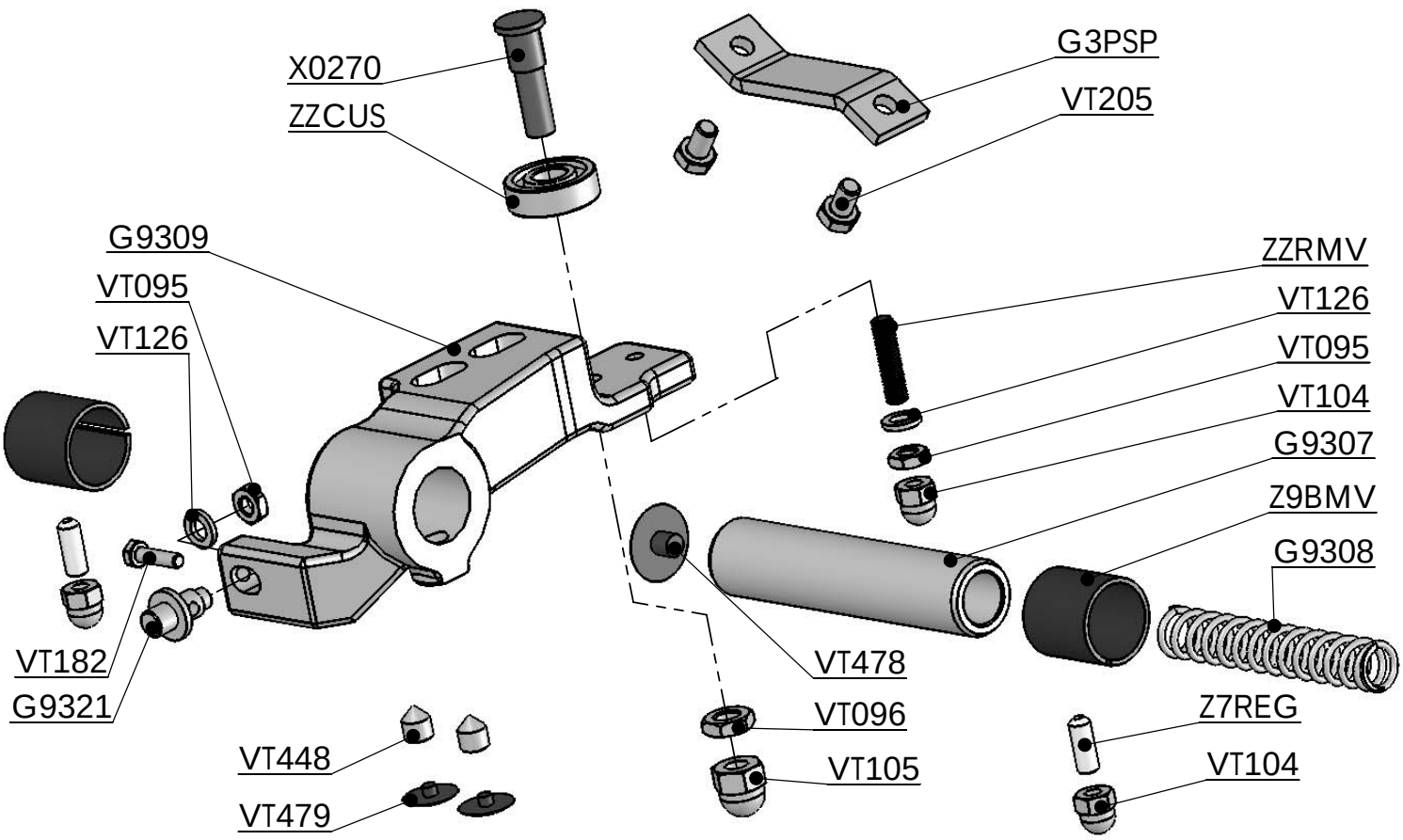

CODE	DESCRIPTION
G3PSP	SQUARE SHAFT 20x94
G9307	GAUGE PLATE MOUVEMENT PIN 22x107
G9308	SPRING D14,5 L=86 thick.1,8
G9309	GAUGE PLATE MOUVEMENT
G9321	CAM PIN
VT095	HEX JAM NUT M6-1.0 SS
VT096	HEX JAM NUT M8-1.25 SS
VT104	ACORN HEX CAP M6-1.0 SS
VT105	ACORN HEX CAP M8-1.25 SS
VT126	FLAT WASHER M6 SS
VT182	HEX HEAD SCREW M4-0.7x16 SS
VT205	HEX HEAD SCREW M6-1.0x10 SS
VT448	HEX SOCKET SET SCREW CONE POINT M8-1.25x10 SS
VT478	PROTECTIVE CAP d.22-6.5x4.5
VT479	PROTECTIVE CAP d.15.5-4.1x3
X0270	BEARING PIN
Z7REG	PIN M6-1.0x18 SS
Z9BMV	BUSHING 22 - 25 - 25
ZZCUS	BEARING 6000 ZZ 10x20x6
ZZRMV	SCREW M6-1.0x25

BIRO
Model B300M
Manual Slicer

STANDARD 8 - 2010

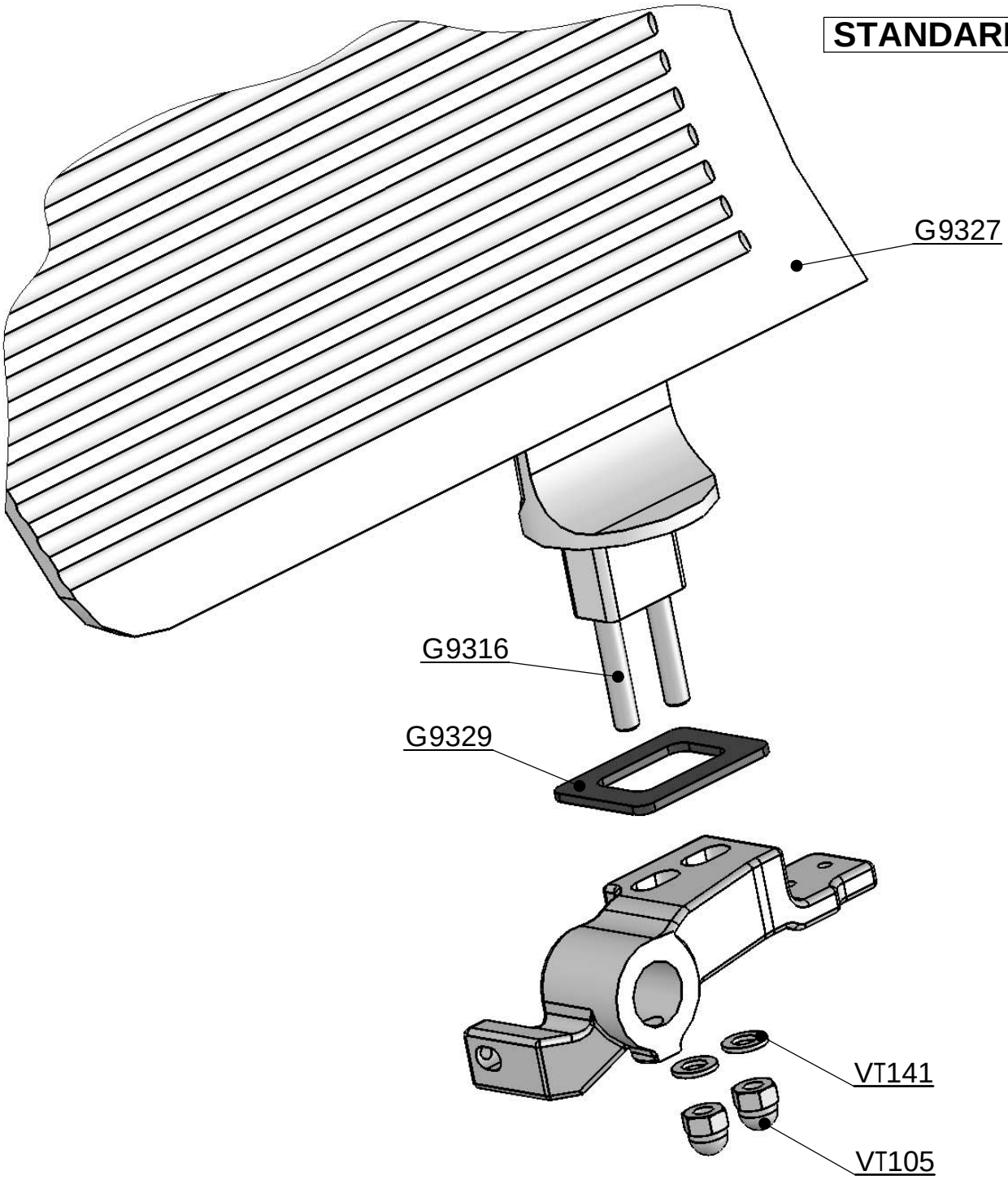

CODE	DESCRIPTION
G9316	SCREW M8-1.25x65
G9327	GAUGE PLATE
G9329	GAUGE PLATE PROTECTION 70x67
VT105	ACORN HEX CAP M8-1.25 SS
VT141	FLAT WASHER HIGHT THICK d.8-20odx4tk SS

BIRO
Model B300M
Manual Slicer

STANDARD 8 - 2010

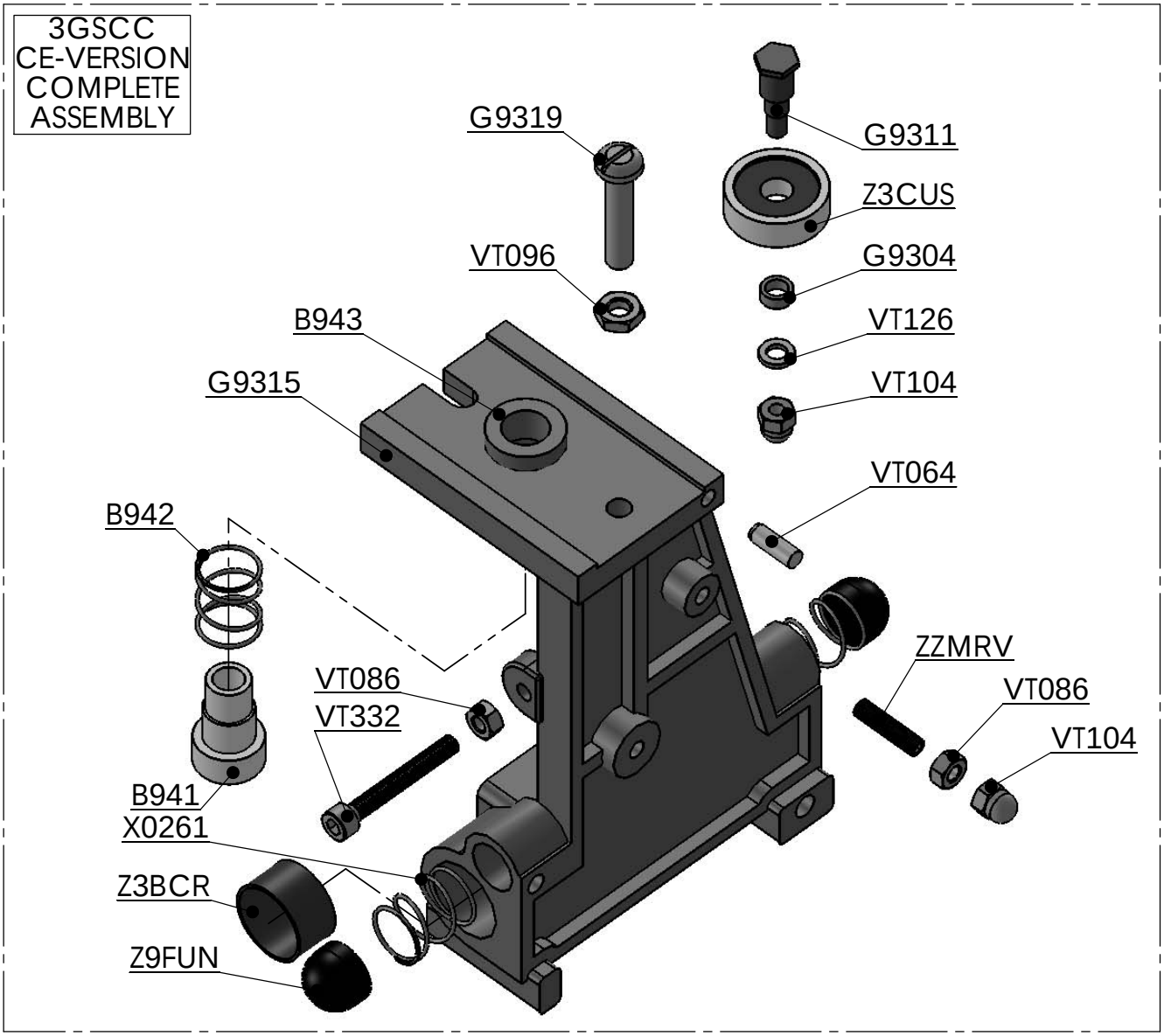

CODE	DESCRIPTION
3GSCC	CE COMPLETE CARRIAGE ASSEMBLY
X0366	CARRIAGE ASSEMBLY (G9315 + Z3BCR)
B941	CARRIAGE PLUG 22x38
B942	PLUG SPRING 19,5x25
B943	CARRIAGE BUSHING 30x28,5
G9304	SPACER
G9311	BEARING PIN
G9315	CARRIAGE 300
G9319	OVAL COUNTERSUNK HEAD M8-1.25x35 SS
VT064	PARRALLEL PIN M5m6x15 SS
VT086	HEX NUT M6-1.0 SS
VT096	HEX JAM NUT M8-1.25 SS
VT104	ACORN HEX CAP M6-1.0 SS
VT126	FLAT WASHER M6 SS
VT332	HEX SOCKET HEAD SCREW M6-1.0x40 SS
X0261	SLIDING SPRING DF2,5-DE17-L45
Z3BCR	BUSHING PCM 222520B
Z3CUS	TREATED BEARING 7x25x7
Z9FUN	PLASTIC PROTECTION
ZZMRV	SCREW M6-1.0x25

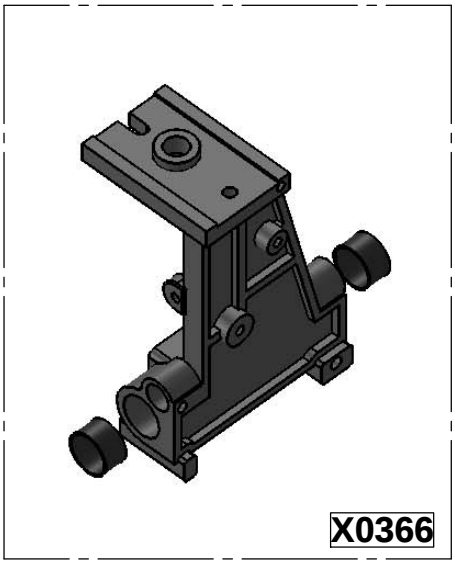

BIRO
Model B300M
Manual Slicer

STANDARD 8 - 2010

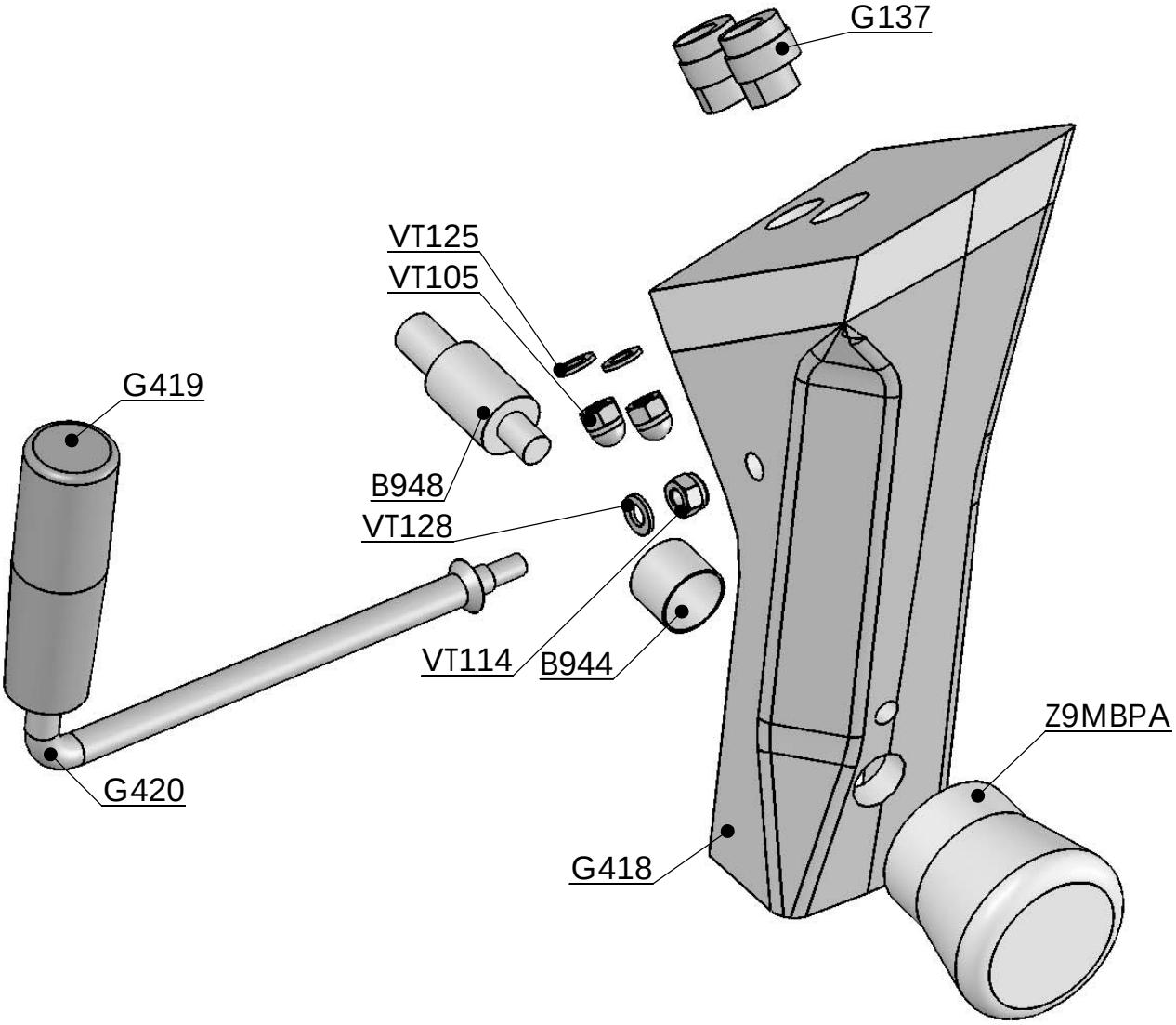

CODE	DESCRIPTION
B944	SUPPORT PLATE BUSHING 25x26,5
B948	LOCKING CARRIAGE SCREW
G137	REGULATION SHAFT
G418	SUPPORT TRAY
G419	HANDLE CARRIAGE
G420	HANDLE SHAFT CARRIAGE
VT105	ACORN HEX CAP M8-1.25 SS
VT114	NYLOK NUT M10-1.5 SS
VT125	FLAT WASHER M8 SS
VT128	FLAT WASHER M10 SS
Z9MBPA	LOCKING PLATE ALU KNOB

FROM S.N.: 13467

08-1511

BIRO
Model B300M
Manual Slicer

STANDARD 8 - 2010

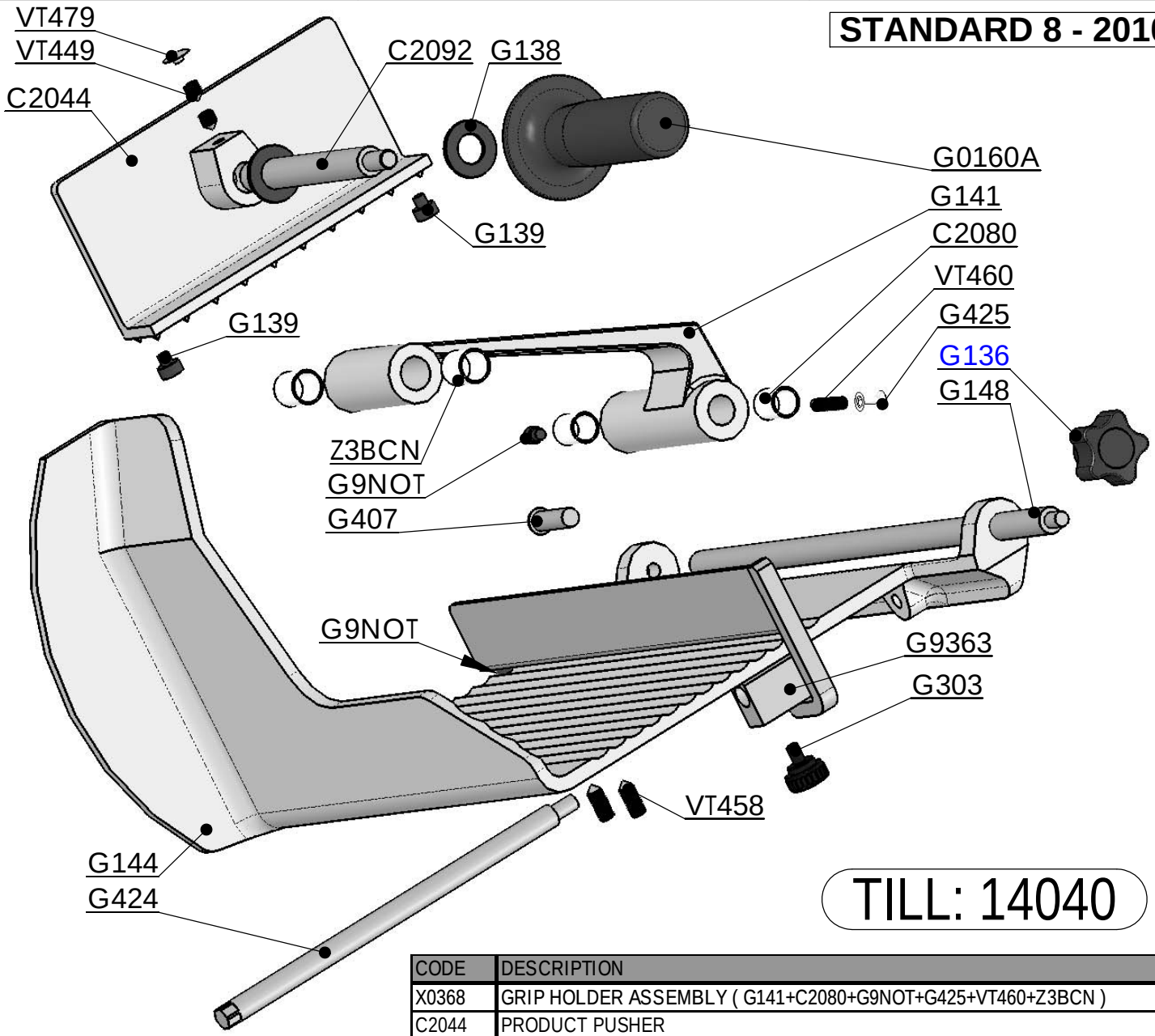

TILL: 14040

CODE	DESCRIPTION
X0368	GRIP HOLDER ASSEMBLY (G141+C2080+G9NOT+G425+VT460+Z3BCN)
C2044	PRODUCT PUSHER
C2080	BUSHING 14x16x20
C2092	HANDLE BAR
G0160A	ALU HANDLE S8-2010
G136	ALU KNOB PUSHER BAR D40M8-1.25
G138	SILICON SEAL
G139	PLASTIC SLIDING PIN
G141	ALU ARM
G144	CARRIAGE TRAY
G148	SHAFT 14x398
G303	KNOB WITH SCREW
G407	PIN D10x35
G424	FENCE SHAFT
G425	PLASTIC CAP
G9363	FENCE
G9NOT	BUMPER
VT449	HEX SOCKET SET SCREW CONE POINT M8-1.25x8 SS
VT458	HEX SOCKET SET SCREW FLAT POINT M8-1.25x35 SS
VT460	HEX SOCKET SET SCREW FLAT POINT M6-1.0x20 SS
VT479	PROTECTIVE CAP d.15.5-4.1x3
Z3BCN	BUSHING 16x18x20

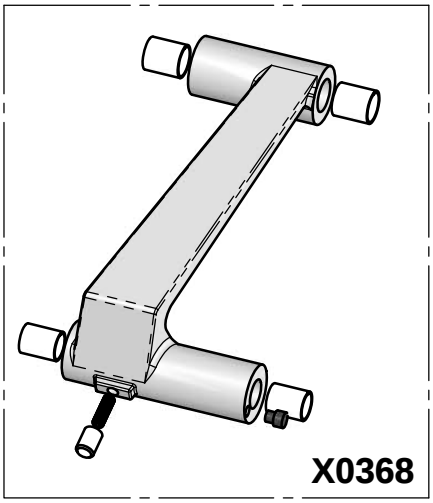

09-1511

BIRO
Model B300M
Manual Slicer

STANDARD 8 - 2010

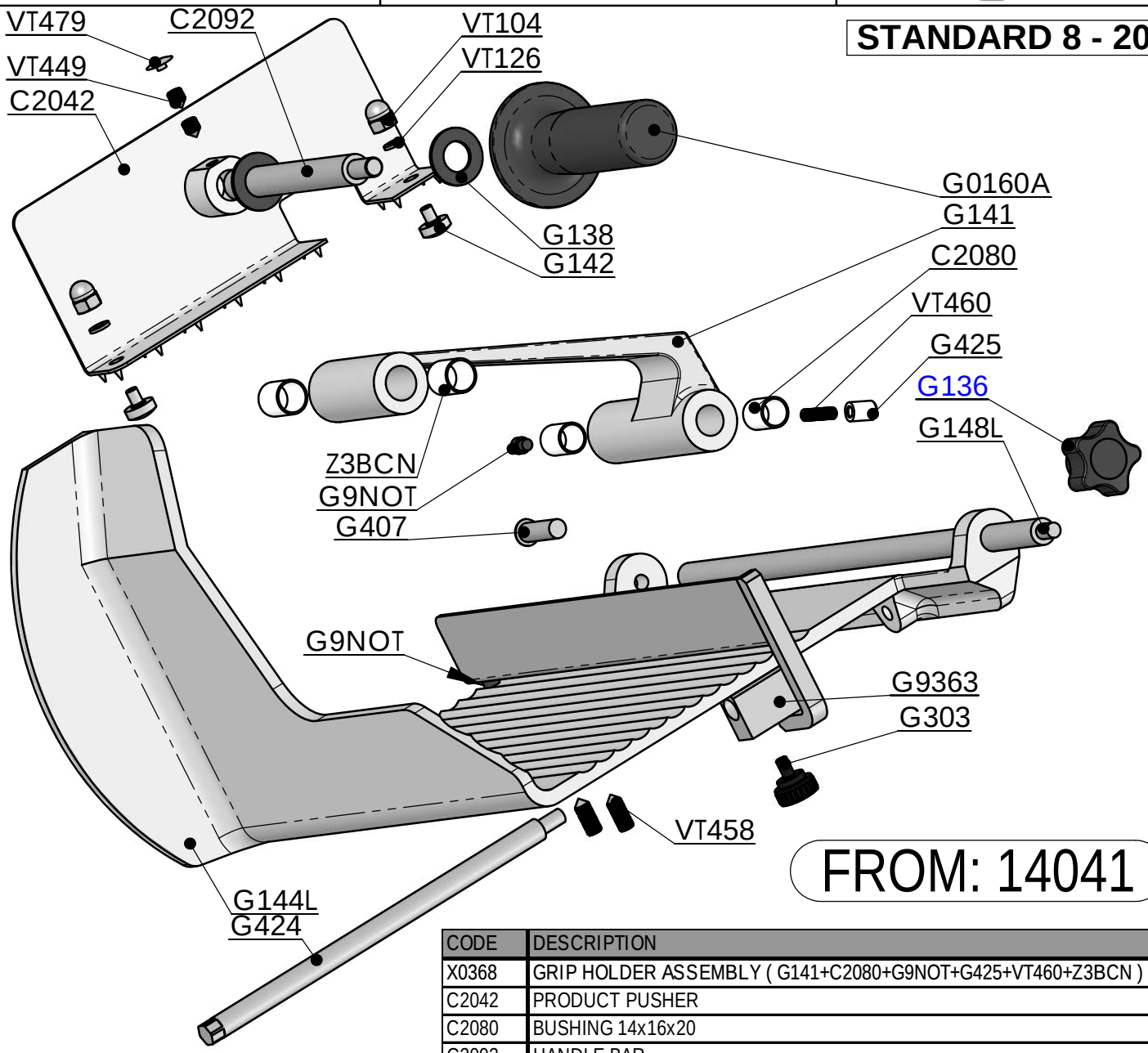

FROM: 14041

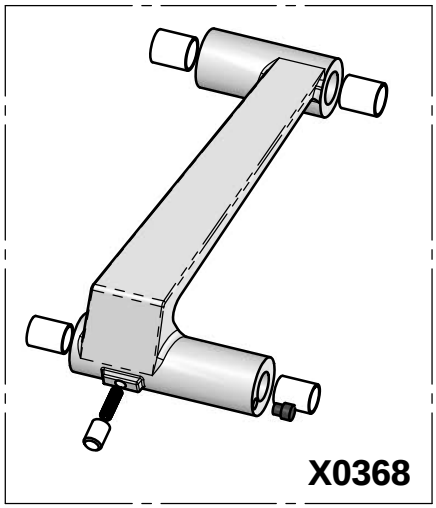

CODE	DESCRIPTION
X0368	GRIP HOLDER ASSEMBLY (G141+C2080+G9NOT+G425+VT460+Z3BCN)
C2042	PRODUCT PUSHER
C2080	BUSHING 14x16x20
C2092	HANDLE BAR
G0160A	ALU HANDLE S8-2010
G136	ALU KNOB PUSHER BAR D40M8-1.25
G138	SILICON SEAL
G141	ALU ARM
G142	PLASTIC SLIDING PIN
G144L	CARRIAGE TRAY
G148L	SHAFT 14x448
G303	KNOB WITH SCREW
G407	PIN D10x35
G424	FENCE SHAFT
G425	PLASTIC CAP
G9363	FENCE
G9NOT	BUMPER
VT104	ACORN HEX CAP M6-1.0 SS
VT126	FLAT WASHER M6 SS
VT449	HEX SOCKET SET SCREW CONE POINT M8-1.25x8 SS
VT458	HEX SOCKET SET SCREW FLAT POINT M8-1.25x35 SS
VT460	HEX SOCKET SET SCREW FLAT POINT M6-1.0x20 SS
VT479	PROTECTIVE CAP d.15.5-4.1x3
Z3BCN	BUSHING 16x18x20

09-1511

BIRO
Model B300M
Manual Slicer

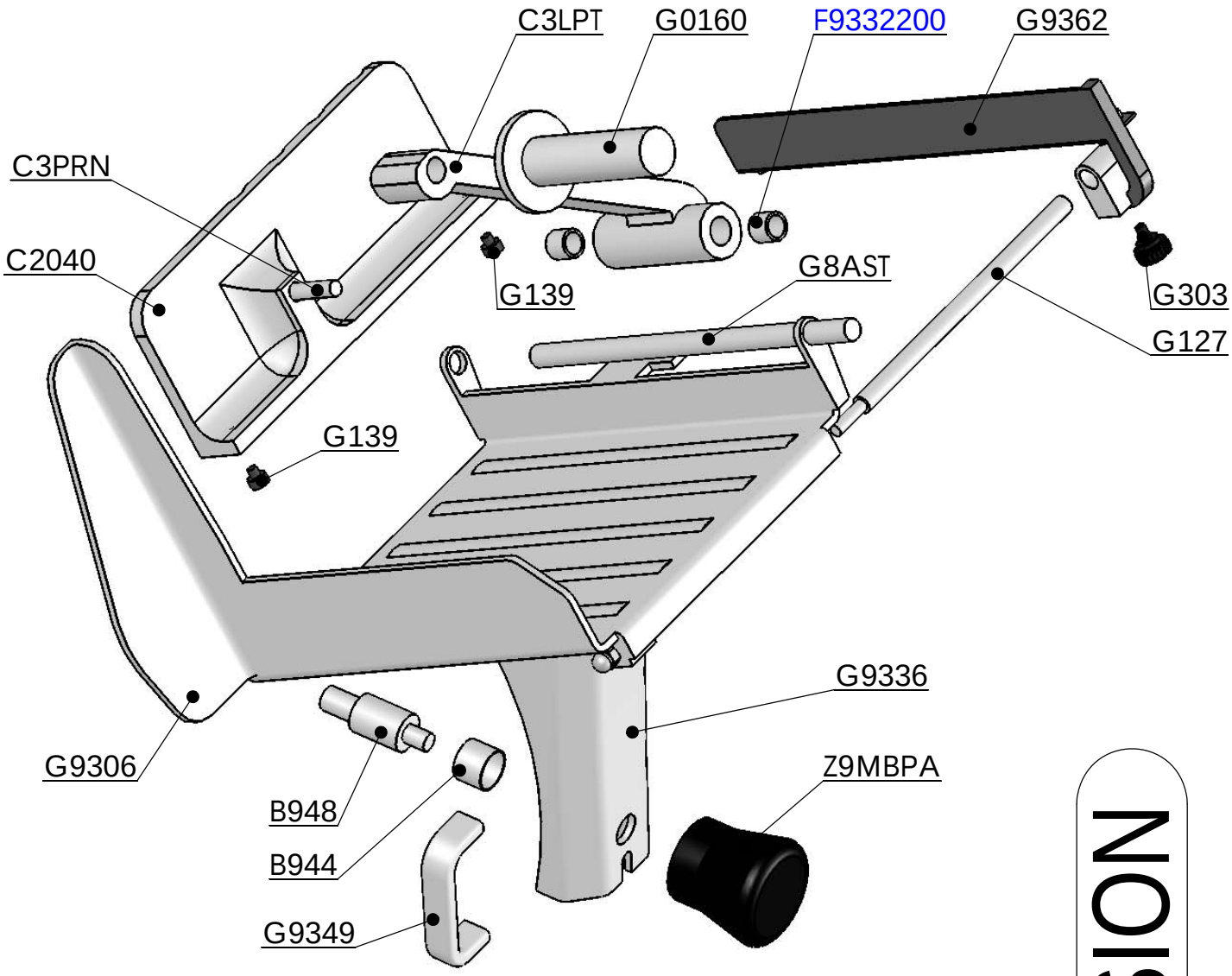

CODE	DESCRIPTION
B944	SUPPORT PLATE BUSHING 25x26,5
B948	LOCKING CARRIAGE SCREW
C2040	PRODUCT PUSHER
C3LPT	ALU ARM
C3PRN	HANDLE SPACER L120
F9332200	BUSHING 12x14x15
G0160	HANDLE I 30 F68 BM10
G127	FENCE SHAFT
G139	PLASTIC SLIDING PIN
G303	PLASTIC KNOB D3 6G
G8AST	SHAFT 14x280
G9306	MEAT HOLDER
G9336	SUPPORT PLATE
G9349	HANDLE M.643/140 B-M6
G9362	FENCE COMPLETE
Z9MBPA	LOCKING PLATE KNOB IT68 BM12 L96

OLD VERSION

10-1511

BIRO
Model B300M
Manual Slicer

STANDARD 8 - 2010

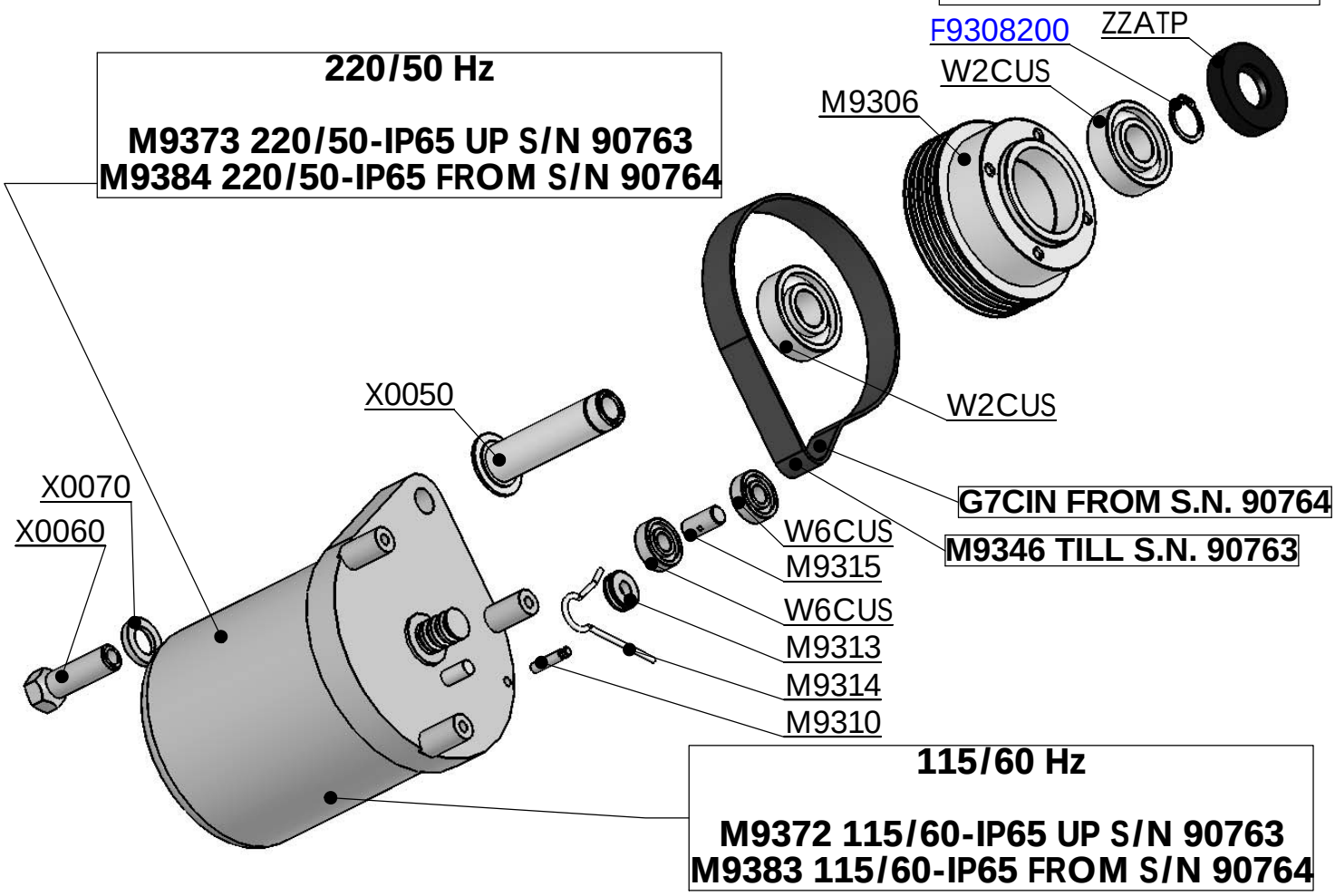

CODE	DESCRIPTION
A69GM	**MOTOR ASSEMBLY 115v/60Hz IP 65**
A70GM	**MOTOR ASSEMBLY 220v/50Hz IP 65**
A71GM	**MOTOR ASSEMBLY 220v/60Hz IP 65**
F9308200	RETAINING RING EXTERNAL M20 SS
G7CIN	BELT B300M CP 140 J9 FROM S/N 90764
M9306	PULLEY B 300 M
M9310	PIN 10 x 22
M9313	SPRING PIN 5 x 25
M9314	BEARING TENS. SPRING
M9315	BEARING PIN
M9321	MOTOR - IP 65 220 VOLT 60 Hz
M9346	BELT 2350/2370 G TB2 11 x 400 UP S/N 90763
M9372	MOTOR - IP 65 115 VOLT 60 Hz UP S/N 90763
M9373	MOTOR - IP 65 220 VOLT 50 Hz UP S/N 90763
M9383	MOTOR - IP 65 115 VOLT 60 Hz FROM S/N 90764
M9384	MOTOR - IP 65 220 VOLT 50 Hz FROM S/N 90764
W2CUS	SS TRANSMISSION BEARING
W6CUS	SS BEARING 6000 ZZ 10 x 20 X 6
X0050	SHAFT - KNIFE 25 x 97
X0060	CAP SCREW
X0070	LOCKWASHER

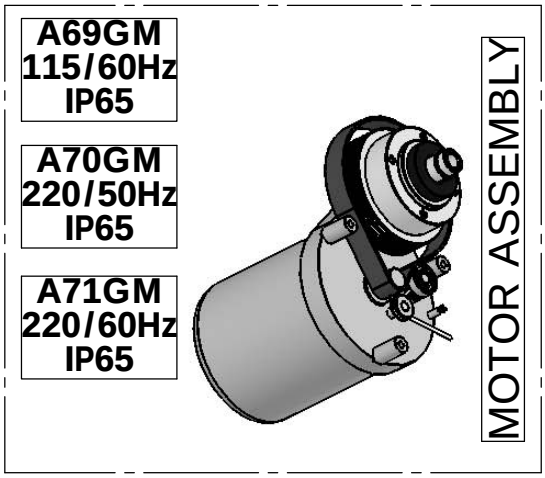

BIRO
B 300 M
Manual Slicer

STANDARD 8 - 2010

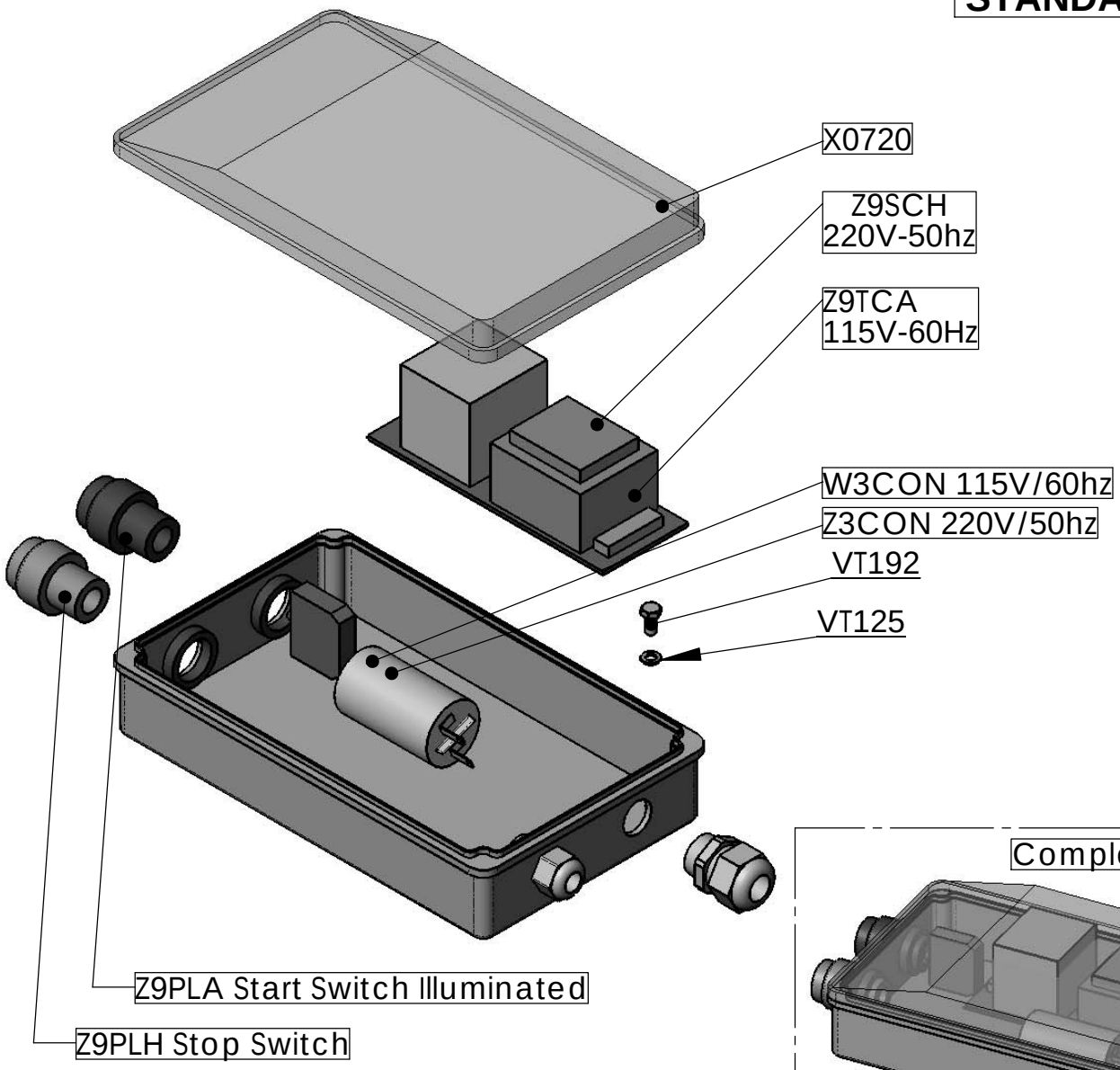

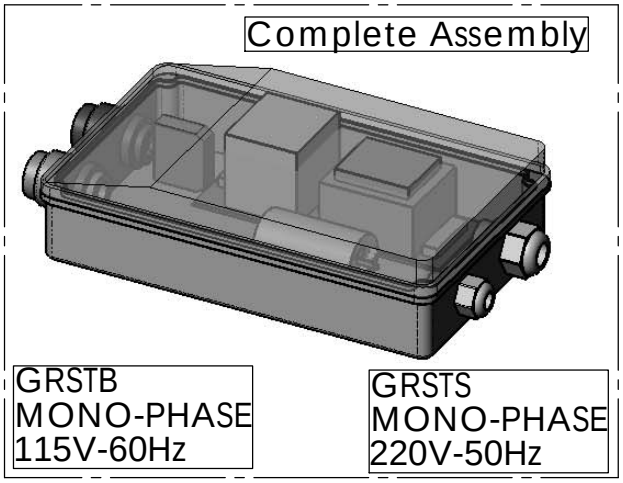

CODE	DESCRIPTION
GRSTB	COMPLETE CONTROL BOX 115V-60Hz
GRSTS	COMPLETE CONTROL BOX 220V-50Hz
VT125	FLAT WASHER M5 SS
VT192	HEX HEAD SCREW M5-0.8x10 SS
W3CON	CAPACITOR 20 Mf 115V-60Hz
X0710	ELECTRIC BOX - BASE
X0720	PLASTIC COVER
Z3CON	CAPACITOR 10 Mf 220V-50Hz
Z9PLA	START SWITCH - IP 69
Z9PLH	STOP SWITCH - IP 69 RED
Z9SCH	CARD 220/50Hz
Z9TCA	CARD 115/60Hz

BIRO
MANUAL SLICER

STANDARD 8 - 2010

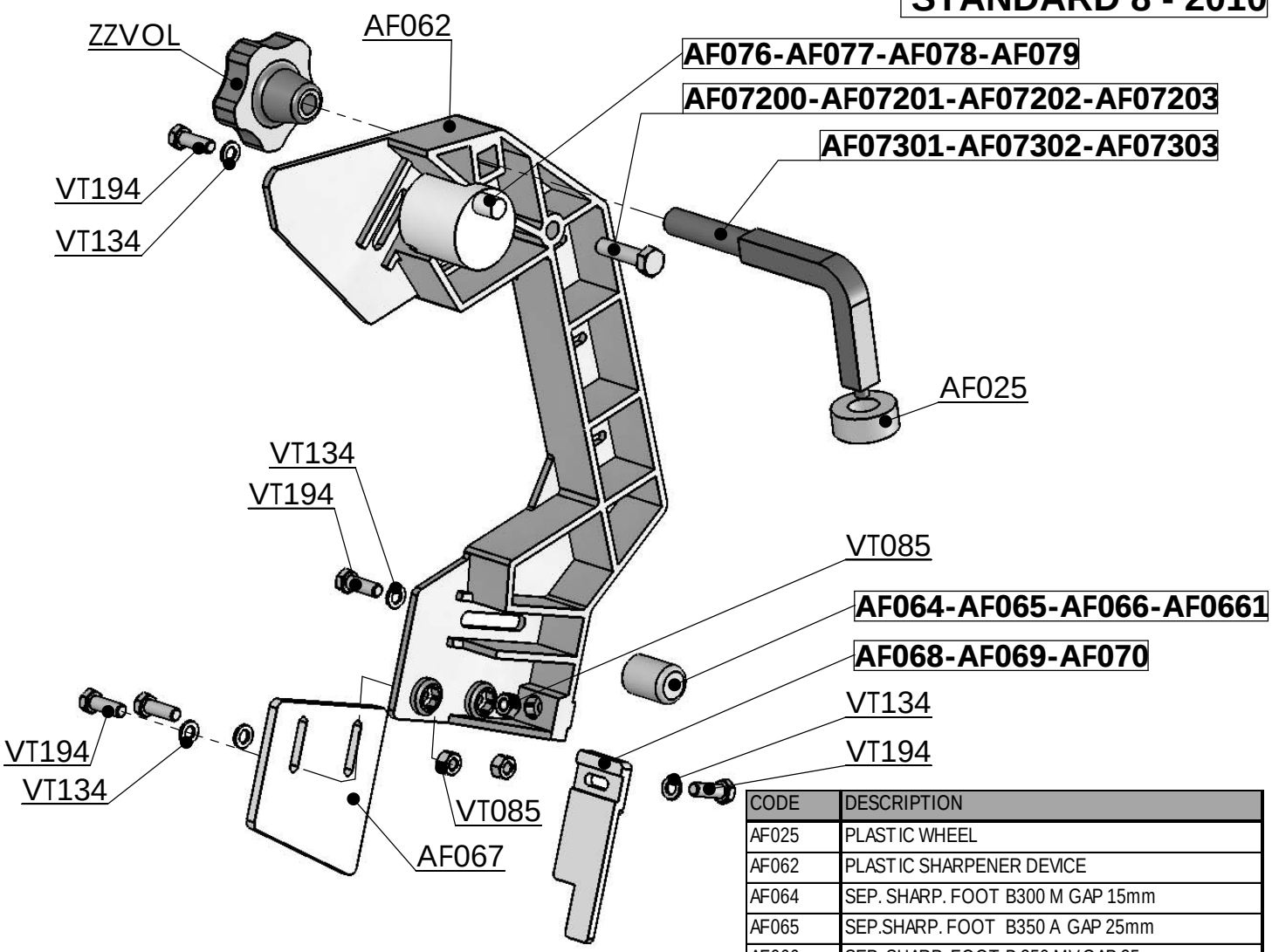

Complete Assembly

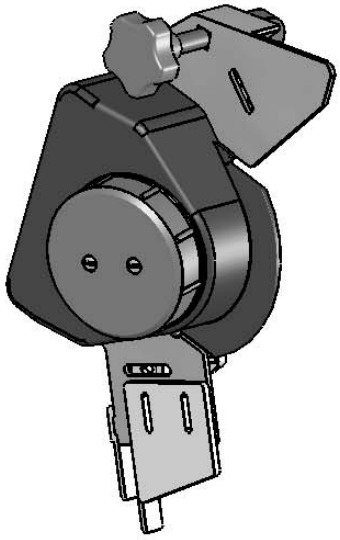

AF01US-AF02US
AF03US-AF04US

CODE	DESCRIPTION
AF025	PLASTIC WHEEL
AF062	PLASTIC SHARPENER DEVICE
AF064	SEP. SHARP. FOOT B300 M GAP 15mm
AF065	SEP.SHARP. FOOT B350 A GAP 25mm
AF066	SEP. SHARP. FOOT B 350 MV GAP 25mm
AF0661	SEP.SHARP. FOOT B350 M GAP 30mm
AF067	SEP.SHARP. COVER PLATE - ALL
AF068	PROTECTION B300 M
AF069	PROTECTION B350 M / B350 A
AF070	PROTECTION B350 MV
AF07200	PIN B300 M
AF07201	PIN B350 MV
AF07202	PIN B350 A
AF07203	PIN B350M
AF07301	LOCKING SHAFT B350 MV / B350 A
AF07302	LOCKING SHAFT B300 M
AF07303	LOCKING SHAFT B350 M
AF076	REFERING FOOT B300 M
AF077	REFERING FOOT B350 A
AF078	REFERING FOOT B350 MV
AF079	REFERING FOOT B350 M
VT134	FLAT WASHER LG OD d.5-15od SS
VT194	HEX HEAD SCREW M5-0.8x14 SS
ZZVOL	KNOB
	ASSEMBLY
AF01US	COMPLETE ASS.BLY B350 A (25mm OPENING)
AF02US	COMPLETE ASS.BLY B300 M
AF03US	COMPLETE ASS.BLY B350 MV
AF04US	COMPLETE ASS.BLY B350 M (30 mm OPENING)

BIRO
MANUAL SLICER

STANDARD 8 - 2010

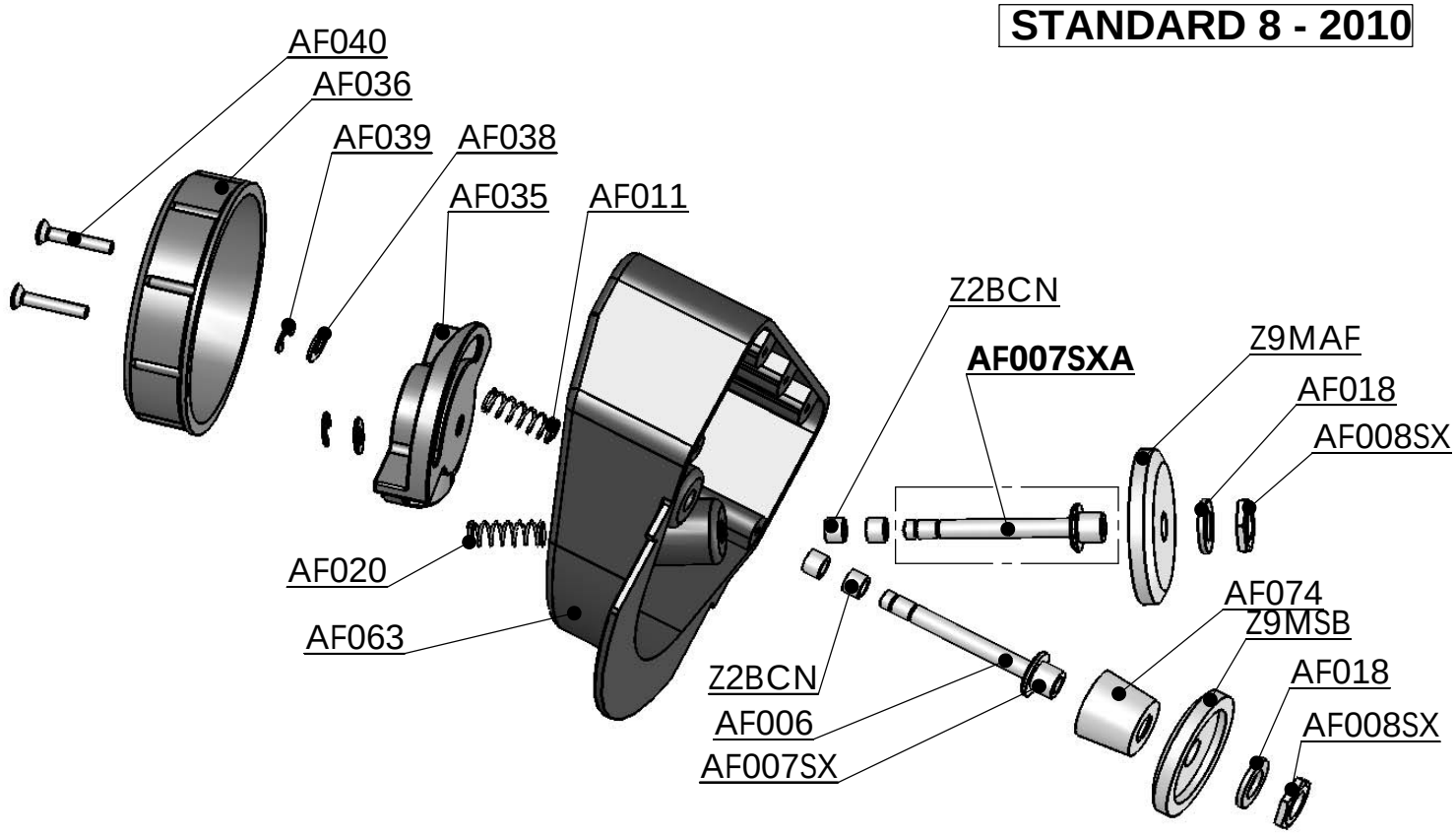

CODE	DESCRIPTION
AF007SXA	SHAFT ASSEMBLY (AF006 + AF007SX)
AF006	SHAFT FOR SHARPENIG / CLEANING STONE
AF007SX	BUSHING
AF008SX	NUT - SPECIAL
AF011	SPRING - CLEANING STONE
AF018	SEAL RING
AF020	SPRING - SHARPENING STONE
AF035	SHARPENER CAM
AF036	KNOB - SHARPENER
AF038	WASHER - PLASTIC
AF039	RING - RETAINER - UNI 7434
AF040	SLOTTED FLAT COUNTERSUNK HEAD M5-0.8x10 SS
AF063	SEPARATED SHARPENER BOX
AF074	DUST COVER ALL
Z2BCN	BUSH 06-08-06
Z9MAF	STONE - SHARPENING
Z9MSB	CLEANING STONE

BIRO
B 300 M
Manual Slicer
UP S/N 90764

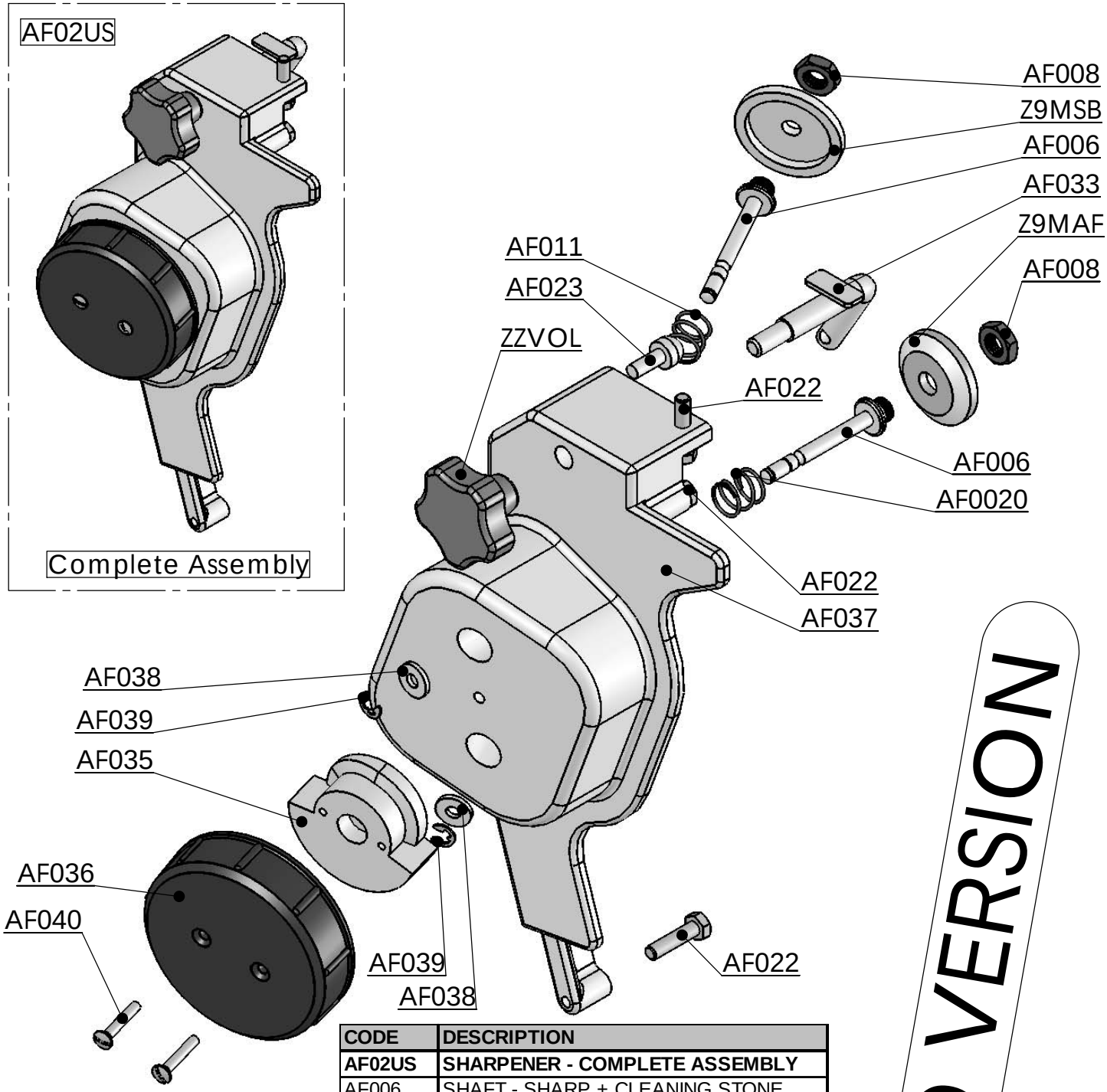

CODE	DESCRIPTION
AF02US	**SHARPENER - COMPLETE ASSEMBLY**
AF006	SHAFT - SHARP + CLEANING STONE
AF008	NUT - SPECIAL
AF011	SPRING - CLEANING STONE
AF020	SPRING - SHARPENING STONE
AF022	SCREW - PLASTIC
AF023	SCREW - MAIN GUIDE - PLASTIC
AF033	ARM
AF035	SHARPENER CAM
AF036	KNOB - SHARPENER
AF037	HOUSING
AF038	WASHER - PLASTIC
AF039	RING - RETAINER - UNI 7434
AF040	SCREW - TC 5 x 10
Z9MAF	STONE - SHARPENING
Z9MSB	CLEANING STONE
ZZVOL	KNOB - BLADE G. + SHARPENER

THE BIRO MANUFACTURING COMPANY
1114 W. Main Street
Marblehead, OH 43440 USA
Ph. 419-798-4451 Fax 419-798-9106
Email: service@birosaw.com