BCX-14 & BX-14
COMBINATION OVEN STEAMER
CNVX-14
CONVECTION OVEN
REPLACEMENT PARTS LIST

EFFECTIVE JANUARY 10, 2019

Superseding All Previous Parts Lists.
The Company reserves the right to make substitution in the event that items specified are not available.
ERRORS: Descriptive and/or typographic errors are subject to correction.

BLODGETT OVEN COMPANY
42 Allen Martin Drive, Essex Junction, Vermont 05452 USA Telephone: (802) 658-6600 Fax: (802) 860-3732
www.blodgett.com

P/N 52978 Rev AA

SERIAL NUMBER LOCATION / KEY:

IMPORTANT: When ordering parts, please provide the model, gas type and serial number of the oven. The identification plate is located on the left side of the combustion compartment and, also, above the control panel under the ledge.

SERIAL NUMBER IDENTIFICATION CODE:

JU = BCX-14G
JX = BX-14G
JW = BCX-14E
JY = BX-14E
JZ = CNVX-14G
KB = CNVX-14E

SERIAL NUMBER EXAMPLES

100709XX001T

10/07/09 = DATE

XX = LETTER CODE FOR HV-100E

001 = FACTORY SEQUENCE

T = TOP OVEN

OR

0685X1820101

10/09 = MONTH & YEAR

X = LEETTER CODE FOR MODEL NAME

1820101 = FACTORY SEQUENCE

TO OBTAIN LITERATURE:

Email: literature@blodgett.com
or visit
www.blodgett.com

TABLE OF CONTENTS

♦ Doors Are Not Returnable

MANUAL CONTROLS 4

MENUSELECT CONTROLS 9

SMARTOUCH CONTROLS 10

ELECTRICAL SYSTEM
GAS OVENS WITH MANUAL CONTROLS 14

ELECTRICAL SYSTEM
GAS OVENS WITH MENUSELECT, MANUAL OR SMART TOUCH. 16

ELECTRICAL SYSTEM
ELECTRIC OVENS WITH MENUSELECT, MANUAL OR SMART TOUCH 17

GAS BOILER 18

ELECTRIC BOILER 20

HOT AIR & HI-VOLT ELECTRIC MODELS. 22

HOT AIR & GAS VALVES GAS MODELS 23

INTERIOR & EXTERIOR PARTS. 24

DOOR & RELATED PARTS 25

WATER SYSTEM 26

DRAIN & RAPID VENT SYSTEMS 27

VENTING & STACKING 28

MOTOR & LIGHTS 29

LEGS & ACCESSORIES. 30

MANUAL CONTROLS

BCX/BX MODELS BEFORE 9-15-2010
CNVX MODELS BEFORE 12-27-2010

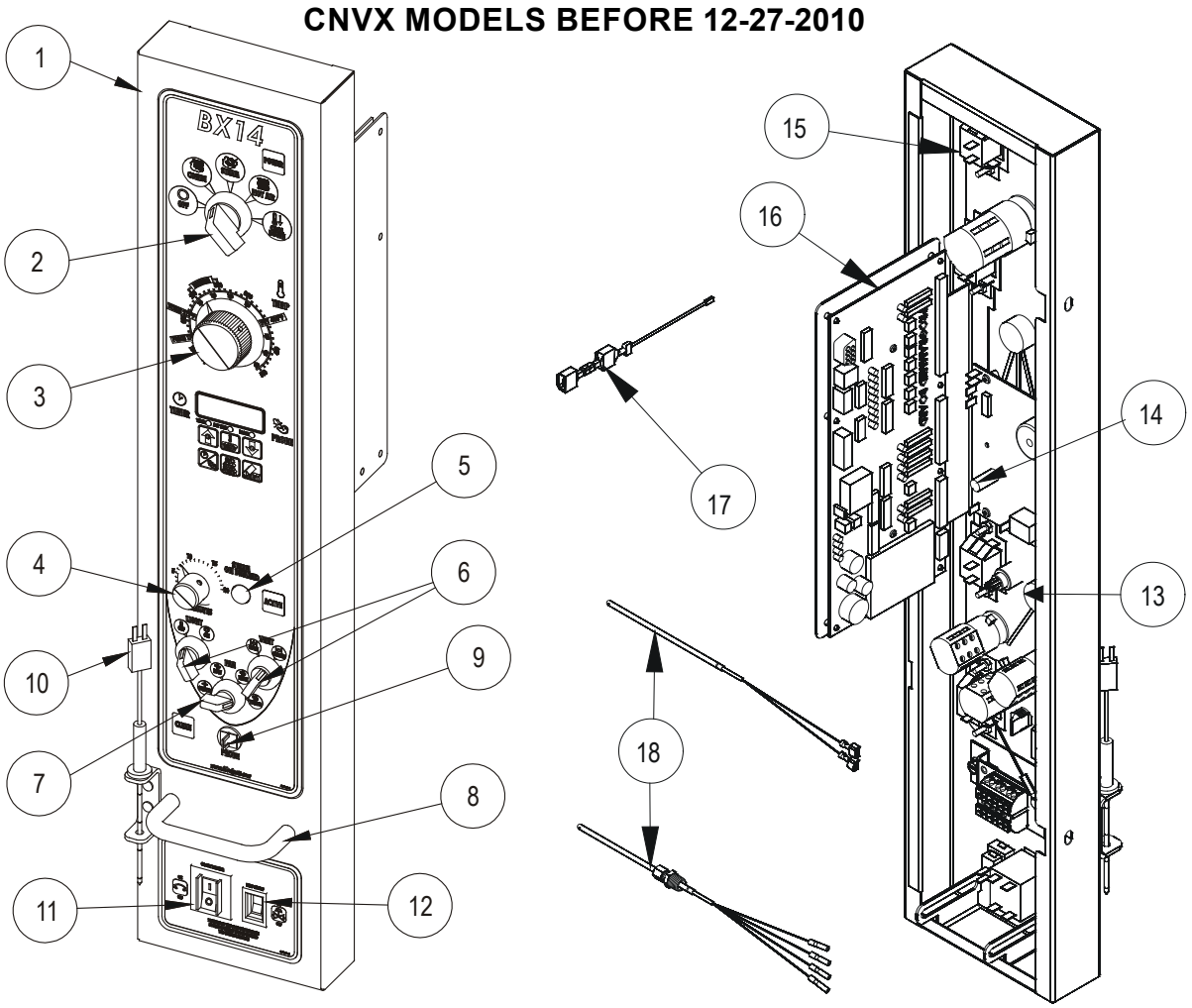

Ref. No.	Part No.	Description
1	52927	PANEL & DECAL, BCX MODELS
	52928	PANEL & DECAL, BX MODELS
	52929	PANEL & DECAL, CNVX MODELS
2	39674	MODE SWITCH, BCX & BX MODELS
	R5686	MODE SWITCH, CNVX MODELS
3	R8742	KNOB, THERMOSTAT
4	R8743	KNOB, STEAM ON DEMAND (BCX & BX MODELS ONLY)
5	R8595	PUSHBUTTON SWITCH, (BCX & BX MODELS ONLY)
6	39791	LIGHT AND VENT SWITCH
7	39675	FAN CONTROL SWITCH
8	R4413	HANDLE
9	39781	MEAT PROBE RECEPTACLE
10	56545	MEAT PROBE, 4", DUAL SENSOR
	56546	MEAT PROBE, 6", DUAL SENSOR

Ref. No.	Part No.	Description
11	39688	CIRCUIT BREAKER, 20A
12	36376	HEAT CUTOFF SWITCH
13	R10338	“STEAM ON DEMAND” TIMER
14	39673	TEMPERATURE CONTROLLER
15	53136	INDICATOR LIGHT (5 X BCX; 4 X BX; 2 X CNVX)
16	50927	CONTROL BOARD, BCX MODELS
	50928	CONTROL BOARD, BX MODELS
17	51109	RESISTOR, 30 OHM ELECTRIC BX MODELS ONLY
	51108	RESISTOR, 18 OHM GAS BX MODELS ONLY
18	39800	CAVITY PROBE, BCX & CNVX MODELS
	50636	CAVITY PROBE, BX MODELS ONLY
	20043	STRAIN RELIEF CABLE

MANUAL CONTROLS

BCX/BX MODELS BETWEEN 9-15-2010 AND 8/1/2017
CNVX MODELS BETWEEN 12-27-2010 AND 8/1/2017

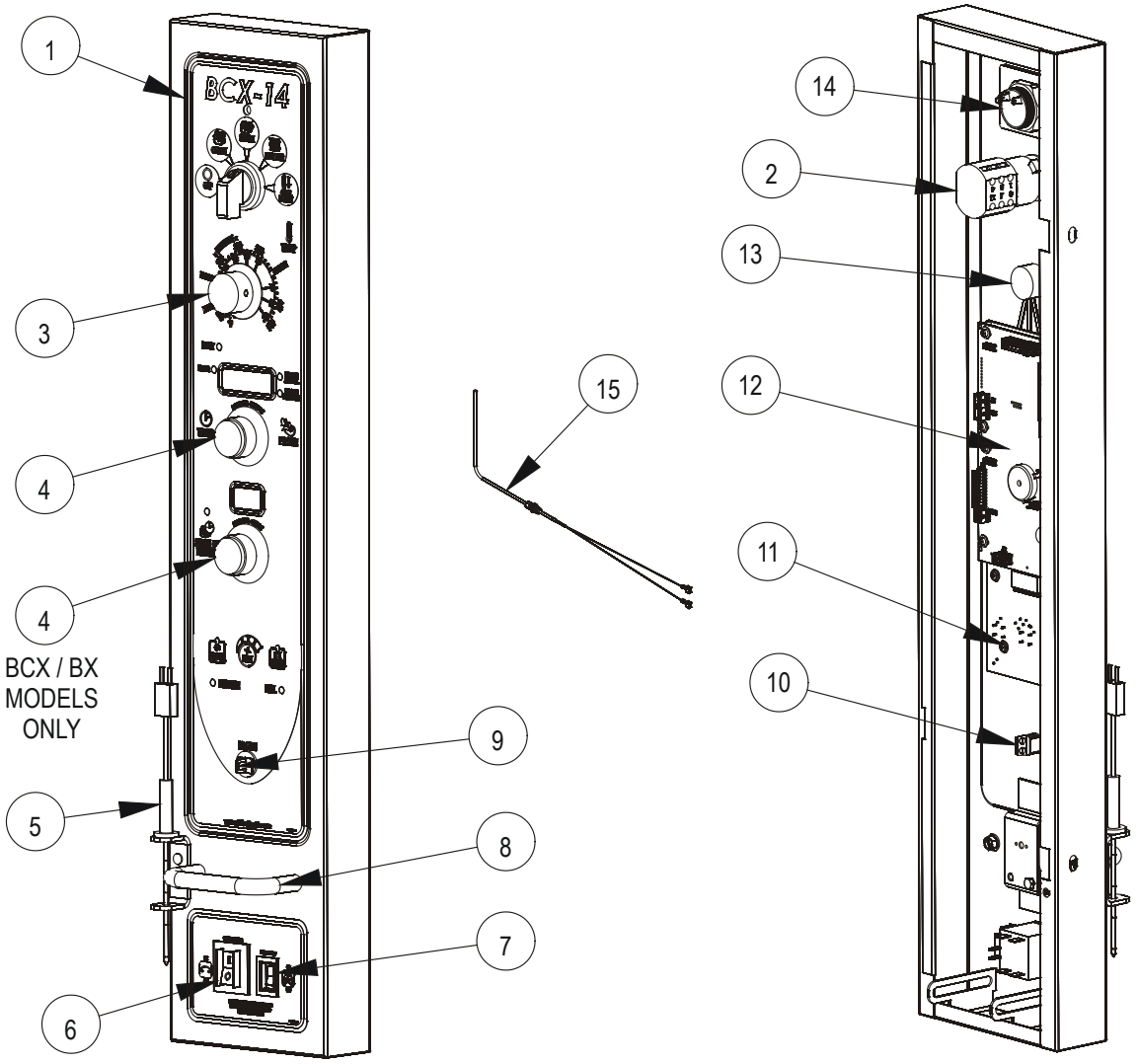

Ref. No.	Part No.	Description
1	54374	PANEL & DECAL, BCX MODELS
	54375	PANEL & DECAL, BX MODELS
	54376	PANEL & DECAL, CNVX MODELS
2	52466	MODE SWITCH (BCX & BX MODELS ONLY)
	53676	MODE SWITCH (CNVX MODELS ONLY)
3	36616	KNOB, W/ARROW
4	36617	KNOB, W/O ARROW
5	56545	MEAT PROBE, 4", DUAL SENSOR
5	56546	MEAT PROBE, 6", DUAL SENSOR
6	36429	CIRCUIT BREAKER
7	36376	HEAT CUTOFF SWITCH
8	R4413	HANDLE
9	39782	MEAT PROBE JACK PLUG

Ref. No.	Part No.	Description
10	39781	MEAT PROBE JACK
11	53146	BOARD, 3 BUTTON
	53344	WIRE HARNESS (FROM CONTROL TO 3 BUTTON BOARD)
12	53696	PROGRAMMED CONTROL, BCX14G
	53697	PROGRAMMED CONTROL, BCX14E
	53698	PROGRAMMED CONTROL, BX14G
	53699	PROGRAMMED CONTROL, BX14E
	53967	PROGRAMMED CONTROL, CNVX14G
	53968	PROGRAMMED CONTROL, CNVX14E
13	18234	POTENTIOMETER
14	52668	REMOTE BUZZER
15	50310	CAVITY PROBE
	20043	STRAIN RELIEF CABLE

PROGRAMMABLE MANUAL CONTROLS

BCX MODELS AFTER 8/1/2017

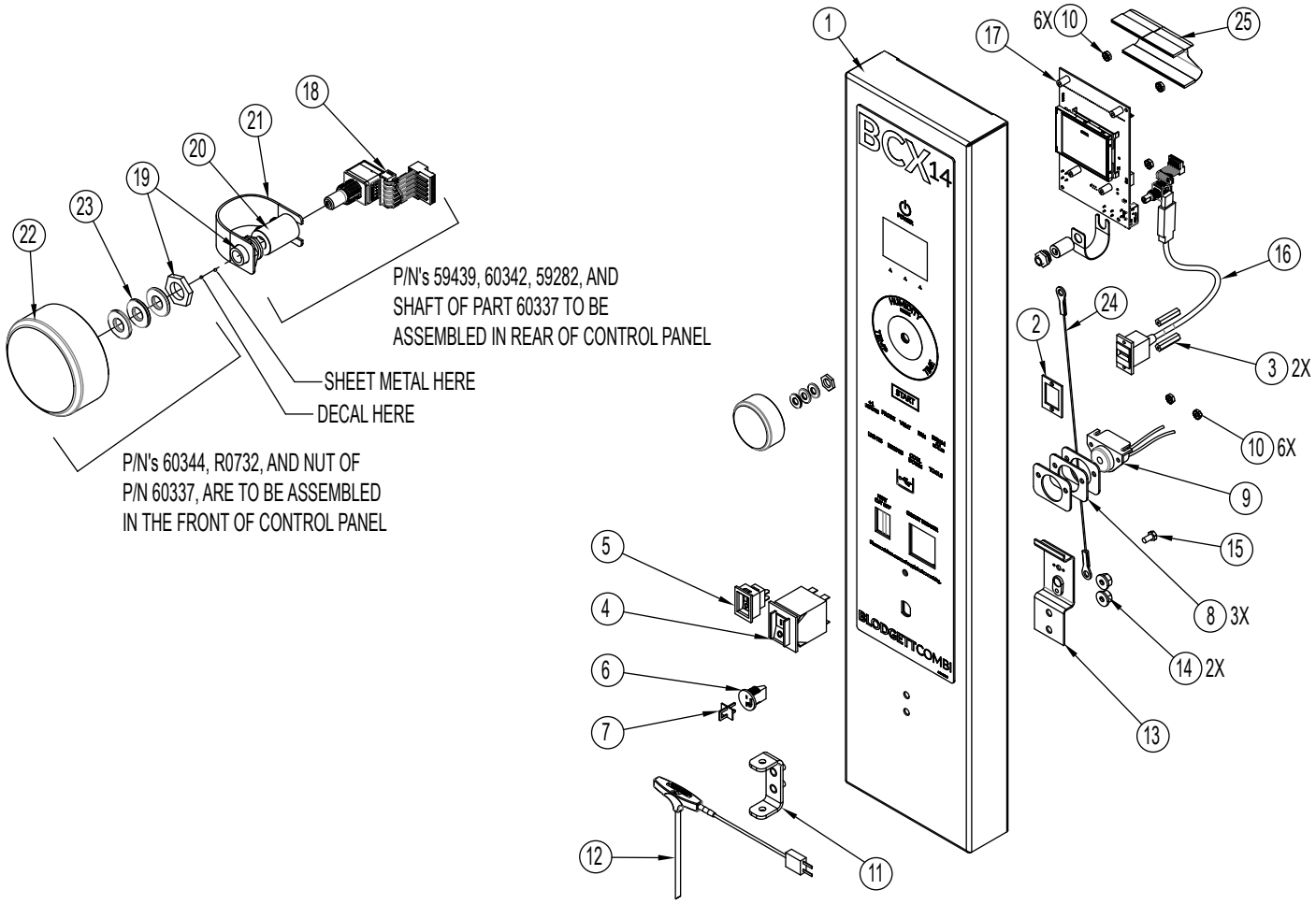

Ref. No.	Part No.	Description
1	59857	PANEL & DECAL ASSY
2	59280	USB SPACER
3	59434	STANDOFF #4-40 X 1"
4	39688	CIRCUIT BREAKER, 20A
5	36376	GAS ON/OFF SWITCH
6	39781	MEAT PROBE JACK
7	39782	MEAT PROBE JACK PLUG
8	53921	BUZZER SPACER
9	53759	BUZZER
10	M3367	NUT, 6-32 KEPS
11	50244	MEAT PROBE HOLDER
12	56545	MEAT PROBE, 4", DUAL SENSOR
12	56546	MEAT PROBE, 6", DUAL SENSOR
12	57685	MEAT PROBE, 4", FILLET
13	55203	BRACKET, TERMINAL BLOCK
14	R8216	NUT, 1/4-20 SERRATED FLANGE HEX
15	M0471	HEX HEAD CAP SCREW, #10-24
16	59565	USB CABLE

Ref. No.	Part No.	Description
17	59362	CONTROL, BCX14E MANUAL
17	59363	CONTROL, BCX14G MANUAL
17	59820	CONTROL, BCX14E MANUAL K12
17	59821	CONTROL, BCX14G MANUAL K12
18	59282	ENCODER
19	60337	SHAFT LEAD IN
20	59439	COUPLING, 1/4", SET SCREW
21	60342	PLASTIC BRIDGE
22	60344	KNOB ENCODER
23	R0732	WASHER, #10
24	20043	12" STRAIN RELIEF
25	59709	CABLE, CONNECTING CONTROL (NOT SHOWN)
	55943	TOUCH SCREEN COM CABLE, 40" (NOT SHOWN)
	59553	HARNESS, BX, BCX, CNVX, MANUAL, FRONT (NOT SHOWN)

PROGRAMMABLE MANUAL CONTROLS

BX MODELS AFTER 8/1/2017

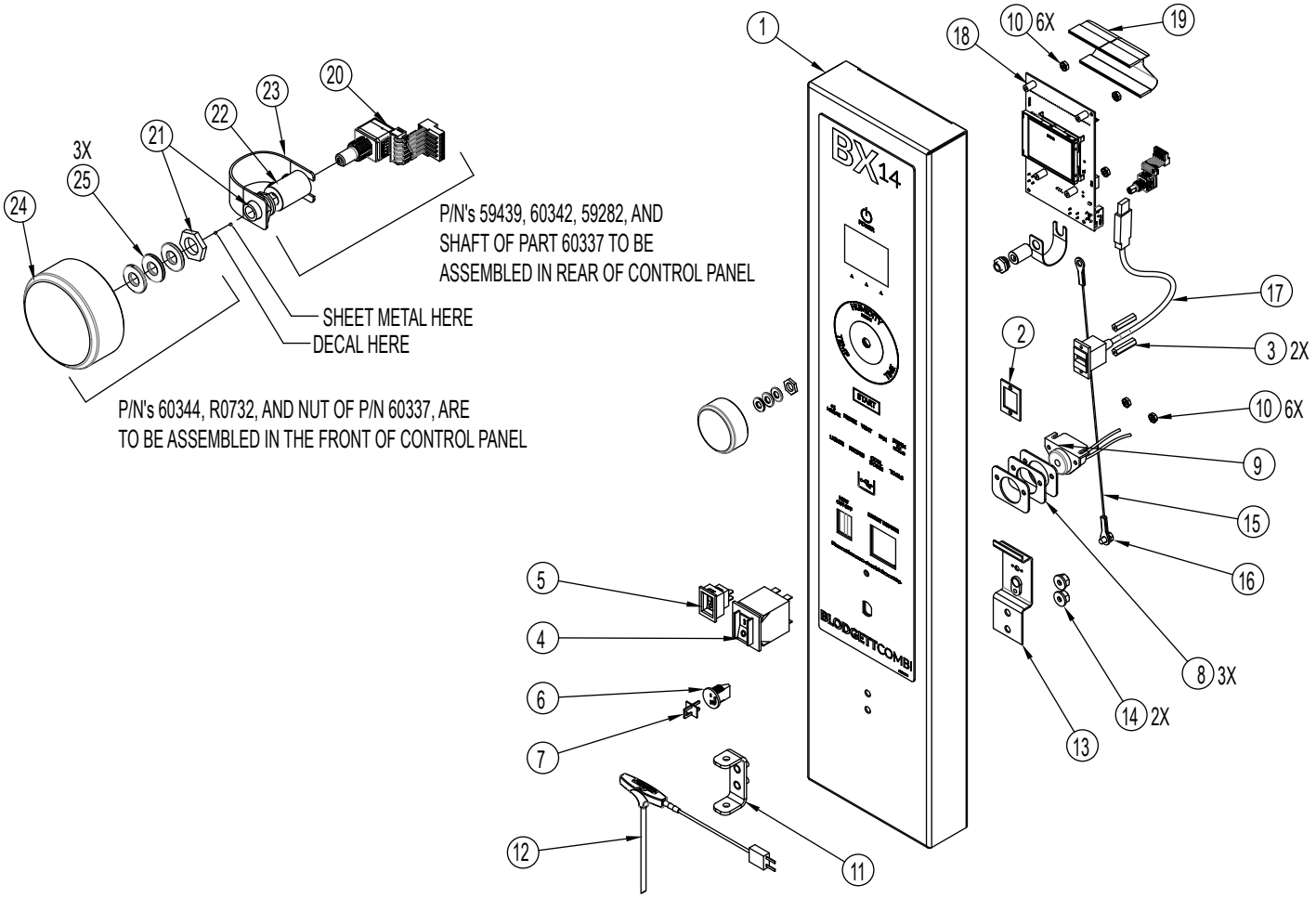

Ref. No.	Part No.	Description
1	59859	PANEL & DECAL ASSY
2	59280	USB SPACER
3	59434	STANDOFF #4-40 X 1"
4	39688	CIRCUIT BREAKER, 20A
5	36376	GAS ON/OFF SWITCH
6	39781	MEAT PROBE JACK
7	39782	MEAT PROBE JACK PLUG
8	53921	BUZZER SPACER
9	53759	BUZZER
10	M3367	NUT, 6-32 KEPS
11	50244	MEAT PROBE HOLDER
12	56545	MEAT PROBE, 4", DUAL SENSOR
12	56546	MEAT PROBE, 6", DUAL SENSOR
12	57685	MEAT PROBE, 4", FILLET
13	55203	BRACKET, TERMINAL BLOCK
14	R8216	NUT, 1/4-20 SERRATED FLANGE HEX
15	20043	12" STRAIN RELIEF
16	M0471	HEX HEAD CAP SCREW, #10-24
17	59565	USB CABLE
18	59364	CONTROL, BX14, MANUAL
18	59819	CONTROL, BX14, MANUAL, K12
19	59709	CABLE, CONNECTING CONTROL
20	59282	ENCODER
21	60337	SHAFT LEAD IN
22	59439	COUPLING, 1/4", SET SCREW
23	60342	PLASTIC BRIDGE
24	60344	KNOB ENCODER
25	R0732	WASHER, #10
	55943	TOUCH SCREEN COM CABLE, 40" (NOT SHOWN)
	59553	HARNESS, BX, BCX, CNVX, MANUAL, FRONT (NOT SHOWN)

PROGRAMMABLE MANUAL CONTROLS

CNVX MODELS AFTER 8/1/2017

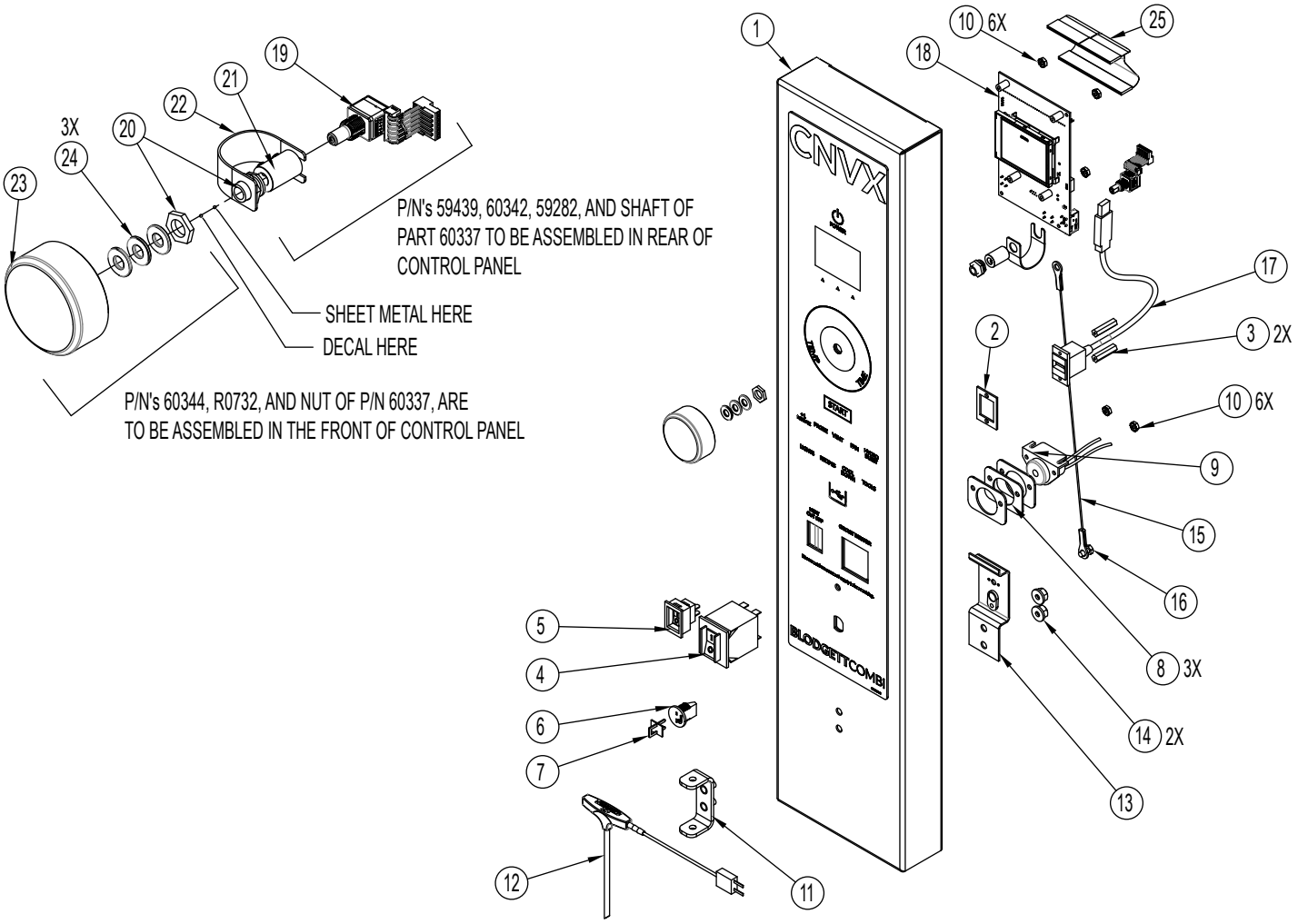

Ref. No.	Part No.	Description
1	59861	PANEL & DECAL ASSY
2	59280	USB SPACER
3	59434	STANDOFF #4-40 X 1"
4	39688	CIRCUIT BREAKER, 20A
5	36376	GAS ON/OFF SWITCH
6	39781	MEAT PROBE JACK
7	39782	MEAT PROBE JACK PLUG
8	53921	BUZZER SPACER
9	53759	BUZZER
10	M3367	NUT, 6-32 KEPS
11	50244	HOLDER, MEAT PROBE
12	56545	MEAT PROBE, 4", DUAL SENSOR
12	56546	MEAT PROBE, 6", DUAL SENSOR
12	57685	MEAT PROBE, 4", FILLET
13	55203	BRACKET, TERMINAL BLOCK
14	R8216	NUT, 1/4-20 SERRATED FLANGE HEX
15	20043	12" STRAIN RELIEF
16	M0471	HEX HEAD CAP SCREW, #10-24
17	59565	USB CABLE
18	59365	CONTROL, MANUAL, CNVX14
18	59818	CONTROL, MANUAL, CNVX14, K12
19	59282	ENCODER
20	60337	SHAFT, LEAD IN
21	59439	COUPLING, 1/4", SET SCREW
22	60342	PLASTIC BRACE
23	60344	KNOB, ENCODER
24	R0732	WASHER, #10
25	59709	CABLE, CONNECTING CONTROL
	55943	TOUCH SCREEN COM CABLE, 40" (NOT SHOWN)
	59553	HARNESS, BX, BCX, CNVX, MANUAL FRONT (NOT SHOWN)

MENUSELECT CONTROLS

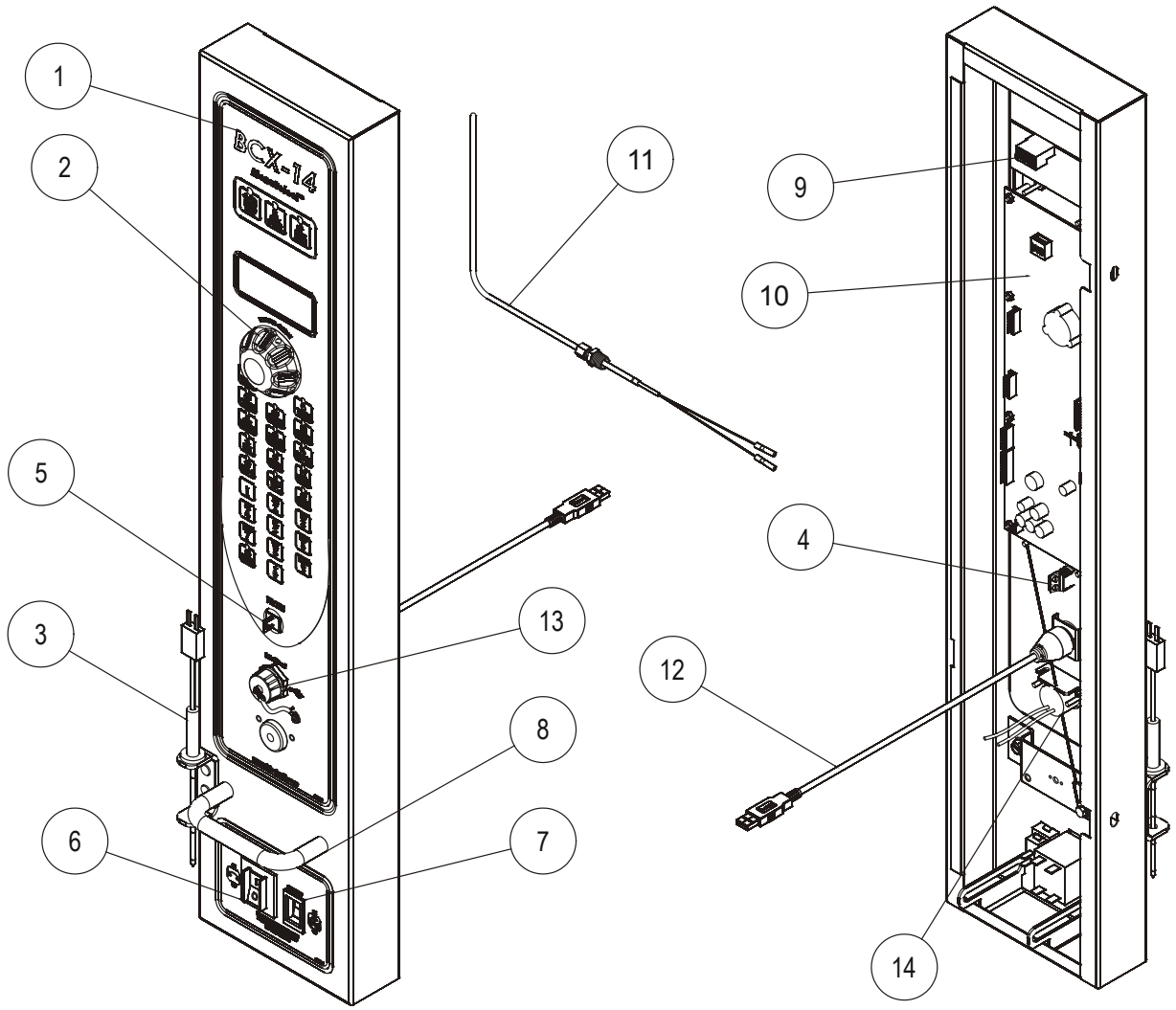

Ref. No.	Part No.	Description
1	52930	PANEL & DECAL, BCX MODELS (BEFORE 1-17-11)
	52931	PANEL & DECAL, BX MODELS (BEFORE 1-17-11)
	54372	PANEL & DECAL, BCX MODELS (AFTER 1-17-11)
	54373	PANEL & DECAL, BX MODELS (AFTER 1-17-11)
2	51372	KNOB
	50986	KNOB DECAL "PRESS TO ENTER"
3	56545	MEAT PROBE, 4", DUAL SENSOR
3	56546	MEAT PROBE, 6", DUAL SENSOR
4	39781	MEAT PROBE RECEPTACLE
5	39782	MEAT PROBE RECEPTACLE PLUG
6	39688	CIRCUIT BREAKER

Ref. No.	Part No.	Description
7	36376	HEAT CUTOFF SWITCH
8	R4413	HANDLE
9	39122	3 BUTTON CONTROLLER
10	53499	PROGRAMMED CONTROL - BCX14G
	53500	PROGRAMMED CONTROL - BCX14E
	53501	PROGRAMMED CONTROL - BX14G
	53502	PROGRAMMED CONTROL - BX14E
	54193	PROGRAMMED CONTROL CNVX-14G
	54194	PROGRAMMED CONTROL CONVX-14E
11	50310	CAVITY PROBE
12	52647	USB CABLE (AFTER 1-17-11 ONLY)
13	52161	USB PORT COVER (AFTER 1-17-11 ONLY)
14	53759	REMOTE BUZZER (AFTER 1-17-11 ONLY)

SMARTOUCH CONTROLS

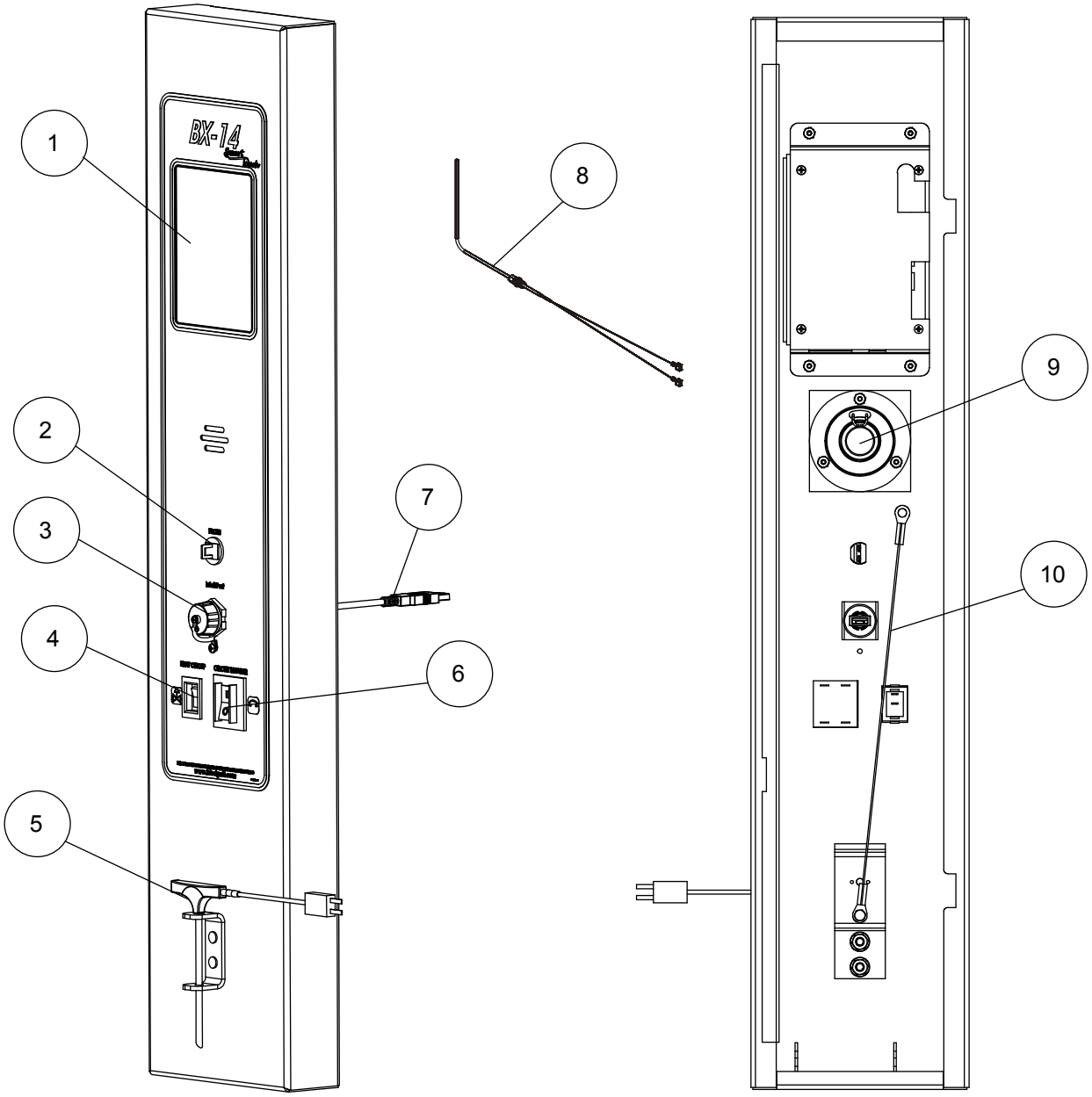

Ref. No.	Part No.	Description
1	55198	BX-14 CONTROL, PROGRAMMED, BEFORE 11/8/13
	57736	BX-14 CONTROL, PROGRAMMED, AFTER 11/8/13
	57337	CNVX-14 CONTROL, PROGRAMMED
2	39781	MEAT PROBE JACK
	39782	MEAT PROBE JACK PLUG
3	52161	USB COVER
4	36376	SWITCH, ON/OFF

Ref. No.	Part No.	Description
5	56545	MEAT PROBE, 4", DUAL SENSOR
	56546	MEAT PROBE, 6", DUAL SENSOR
6	39688	CIRCUIT BREAKER 20A
7	52160	USB CABLE
8	50310	CAVITY PROBE
9	59777	SPEAKER KIT, W/RETAINERS
10	20043	STRAIN RELIEF CABLE
	55943	COMMUNICATION CABLE
	59600	BX-14 PANEL & DECAL ASSY

SMARTTOUCH 2 CONTROLS

BCX MODELS AFTER 8/1/2017

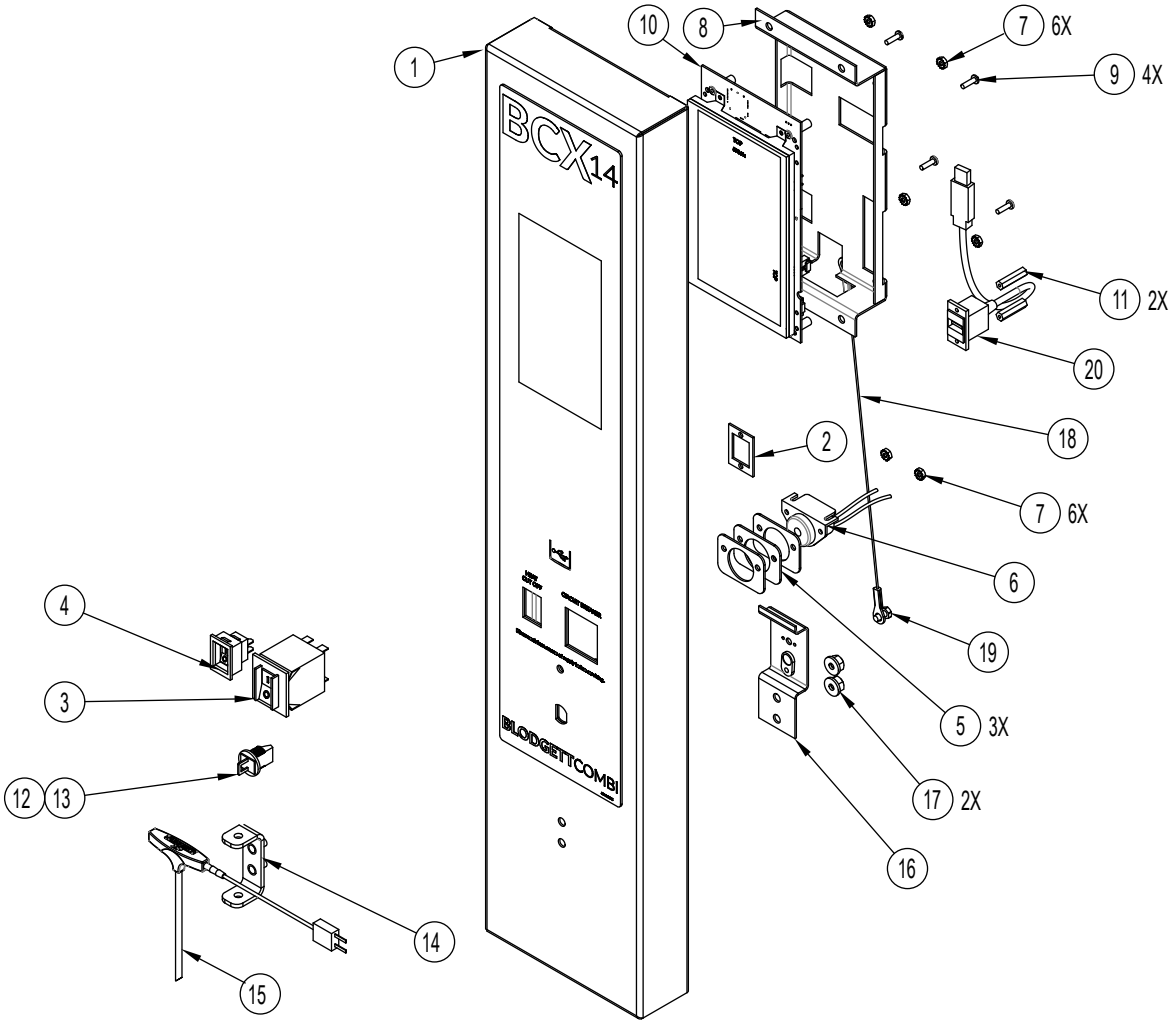

Ref. No.	Part No.	Description
1	59858	PANEL & DECAL ASSY
2	59280	USB SPACER
3	39688	CIRCUIT BREAKER, 20A
4	36376	GAS ON/OFF SWITCH
5	53921	BUZZER SPACER
6	53759	BUZZER
7	M3367	NUT, 6-32 KEPS
8	59348	BRACKET, 7" TOUCH SCREEN
9	34478	SCREW, 6-32 X 0.5 SELF TAPPING
10	59356	CONTROL, 7" TS, BCX14E
10	59357	CONTROL, 7" TS, BCX14G
10	59815	CONTROL, 7" TS, BCX14E K12
10	59816	CONTROL, 7" TS, BCX14G K12
11	59434	STANDOFF #4-40 X 1"
12	39781	MEAT PROBE JACK
13	39782	MEAT PROBE JACK PLUG
14	50244	MEAT PROBE HOLDER
15	56545	MEAT PROBE, 4", DUAL SENSOR
15	56546	MEAT PROBE, 6", DUAL SENSOR
15	57685	MEAT PROBE, 4", FILLET
16	55203	BRACKET, TERMINAL BLOCK
17	R8216	NUT, 1/4-20 SERRATED FLANGE HEX
18	20043	12" STRAIN RELIEF
19	M0471	HEX HEAD CAP SCREW, #10-24
20	59565	USB CABLE
21	59542	HARNESS, BEEPER, ADDER (NOT SHOWN)
	55943	TOUCH SCREEN COM CABLE, 40" (NOT SHOWN)
	55942	HARNESS, HV50, TOUCHSCREEN FRONT (NOT SHOWN)

SMARTTOUCH 2 CONTROLS

BX MODELS AFTER 8/1/2017

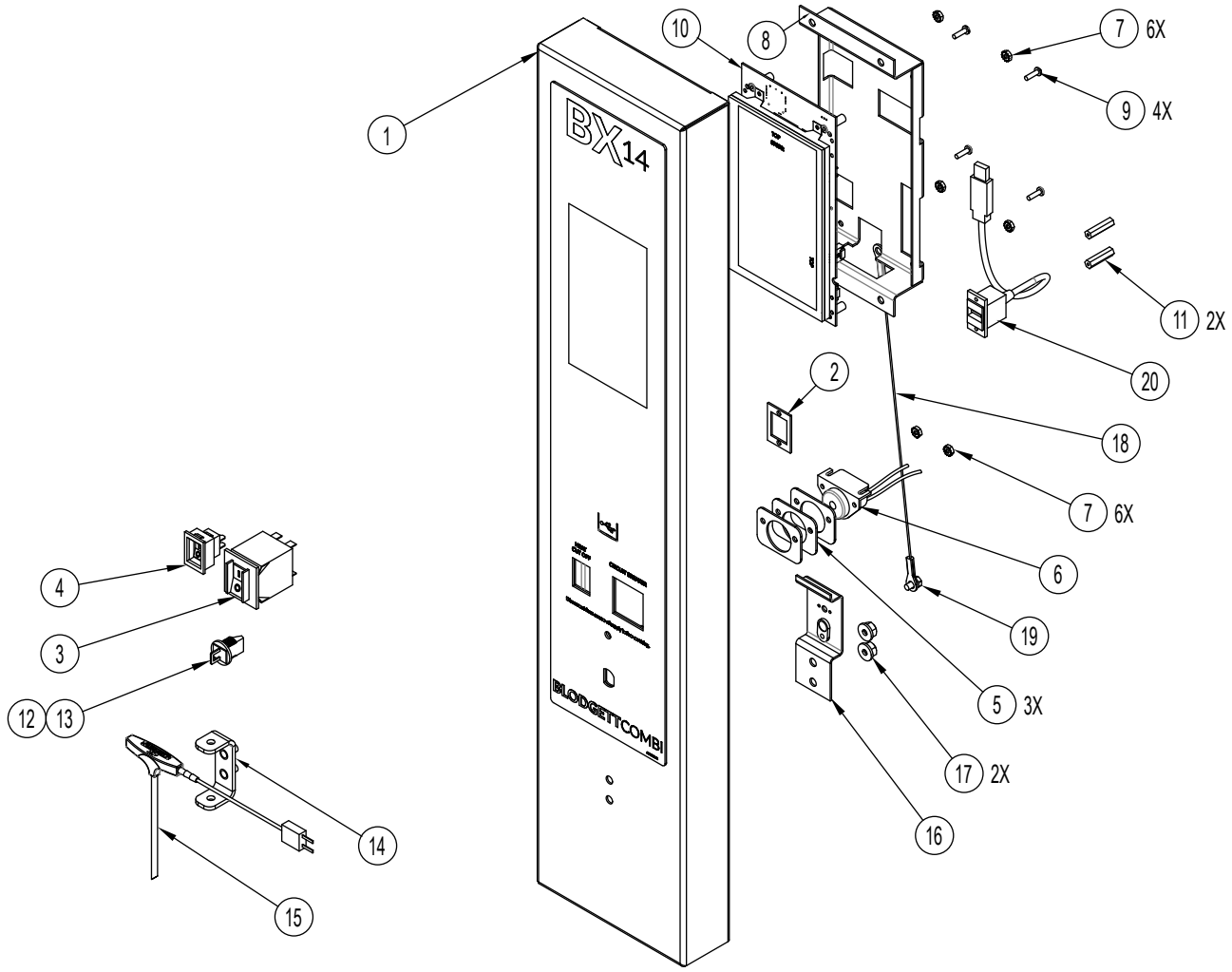

Ref. No.	Part No.	Description
1	59860	PANEL & DECAL ASSY
2	59280	USB SPACER
3	39688	CIRCUIT BREAKER, 20A
4	36376	GAS ON/OFF SWITCH
5	53921	BUZZER SPACER
6	53759	BUZZER
7	M3367	NUT, 6-32 KEPS
8	59348	TOUCHSCREEN BRACKET
9	34478	SCREW, 6-32 X 0.5 SELF TAPPING
10	59358	CONTROL, 7"TS, BX14
10	59814	CONTROL, 7"TS, BX14, K12
11	59434	STANDOFF, #4-40 X 1"
12	39781	MEAT PROBE JACK
13	39782	MEAT PROBE JACK PLUG

Ref. No.	Part No.	Description
14	50244	HOLDER, MEAT PROBE
15	56545	MEAT PROBE, 4", DUAL SENSOR
15	56546	MEAT PROBE, 6", DUAL SENSOR
15	57685	MEAT PROBE, 4", FILLET
16	55203	BRACKET, TERMINAL BLOCK
17	R8216	NUT, 1/4-20 SERRATED FLANGE HEX
18	20043	12" STRAIN RELIEF
19	M0471	HEX HEAD CAP SCREW, #10-24
20	59565	USB CABLE
	59542	HARNESS, BEEPER, ADDER (NOT SHOWN)
	55943	TOUCH SCREEN COM CABLE, 40" (NOT SHOWN)
	55942	HARNESS, HV50, TOUCH SCREEN FRONT (NOT SHOWN)

SMARTTOUCH 2 CONTROLS

CNVX MODELS AFTER 8/1/2017

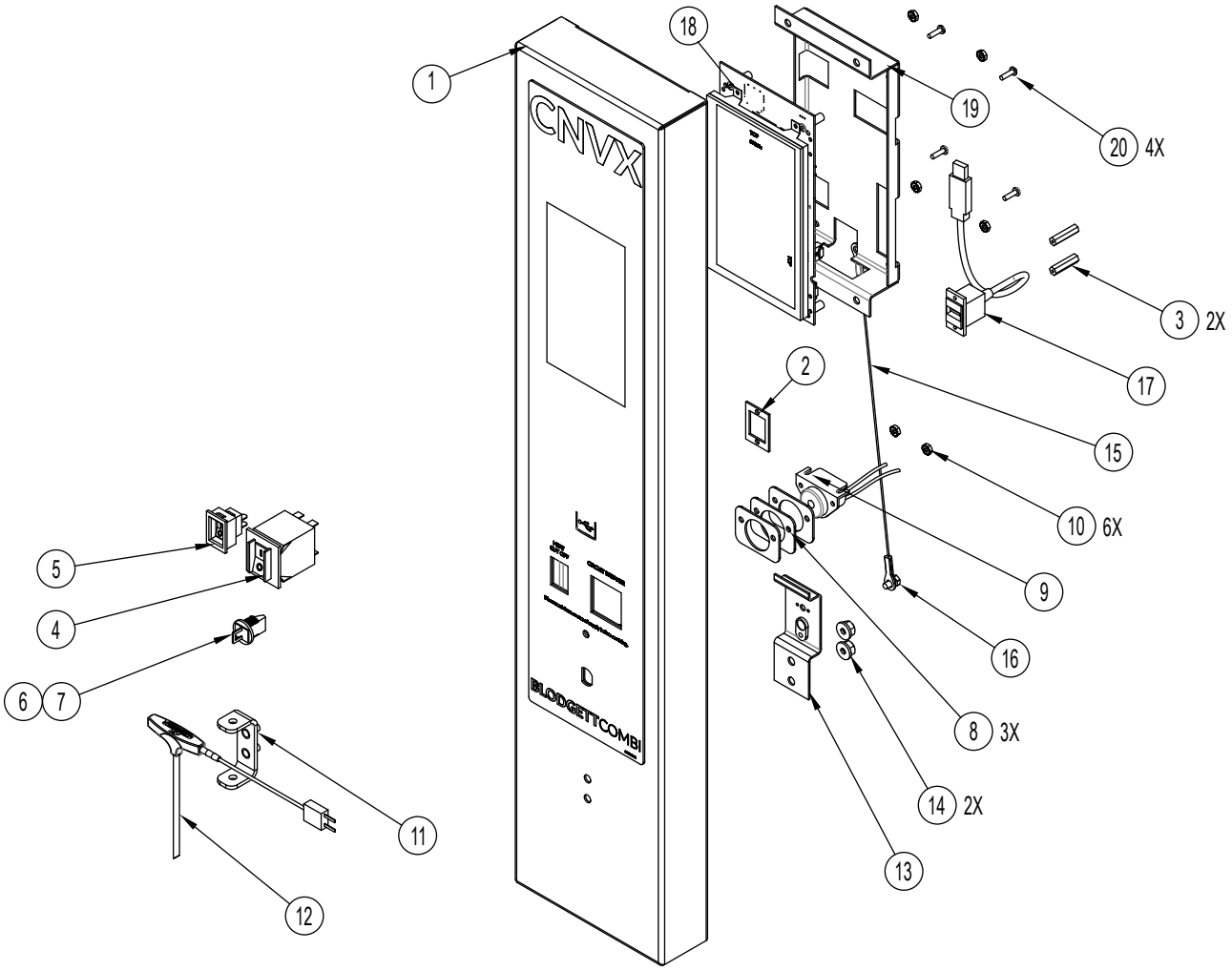

Ref. No.	Part No.	Description
1	59862	PANEL AND DECAL ASSY
2	59280	USB SPACER
3	59434	STANDOFF, #4-40 X 1"
4	39688	CIRCUIT BREAKER, 20A
5	36376	GAS ON/OFF SWITCH
6	39781	MEAT PROBE JACK
7	39782	MEAT PROBE JACK PLUG
8	53921	BUZZER SPACER
9	53759	BUZZER
10	M3367	NUT, 6-32 KEPS
11	50244	MEAT PROBE HOLDER
12	56545	MEAT PROBE, 4", DUAL SENSOR
12	56546	MEAT PROBE, 6", DUAL SENSOR
12	57685	MEAT PROBE, 4", FILLET

Ref. No.	Part No.	Description
13	55203	BRACKET, TERMINAL BLOCK
14	R8216	NUT, 1/4-20 SERRATED FLANGE HEX
15	20043	12" STRAIN RELIEF
16	M0471	HEX HEAD CAP SCREW, #10-24
17	59565	USB CABLE
18	59359	CONTROL, 7" TS, CNVX14
18	59813	CONTROL, 7" TS, CNVX14 K12
19	59348	BRACKET, 7" TOUCH SCREEN
20	34478	SCREW, 6-32 X 0.5 SELF- TAPPING
	59542	HARNESS, BEEPER, ADDER (NOT SHOWN)
	55943	TOUCH SCREEN COM CABLE, 40" (NOT SHOWN)
	55942	HARNESS, HV50, TOUCH SCREEN FRONT (NOT SHOWN)

ELECTRICAL SYSTEM
GAS OVENS WITH MANUAL CONTROLS

BCX/BX MODELS BEFORE 9-15-2010
CNVX MODELS BEFORE 12-27-2010

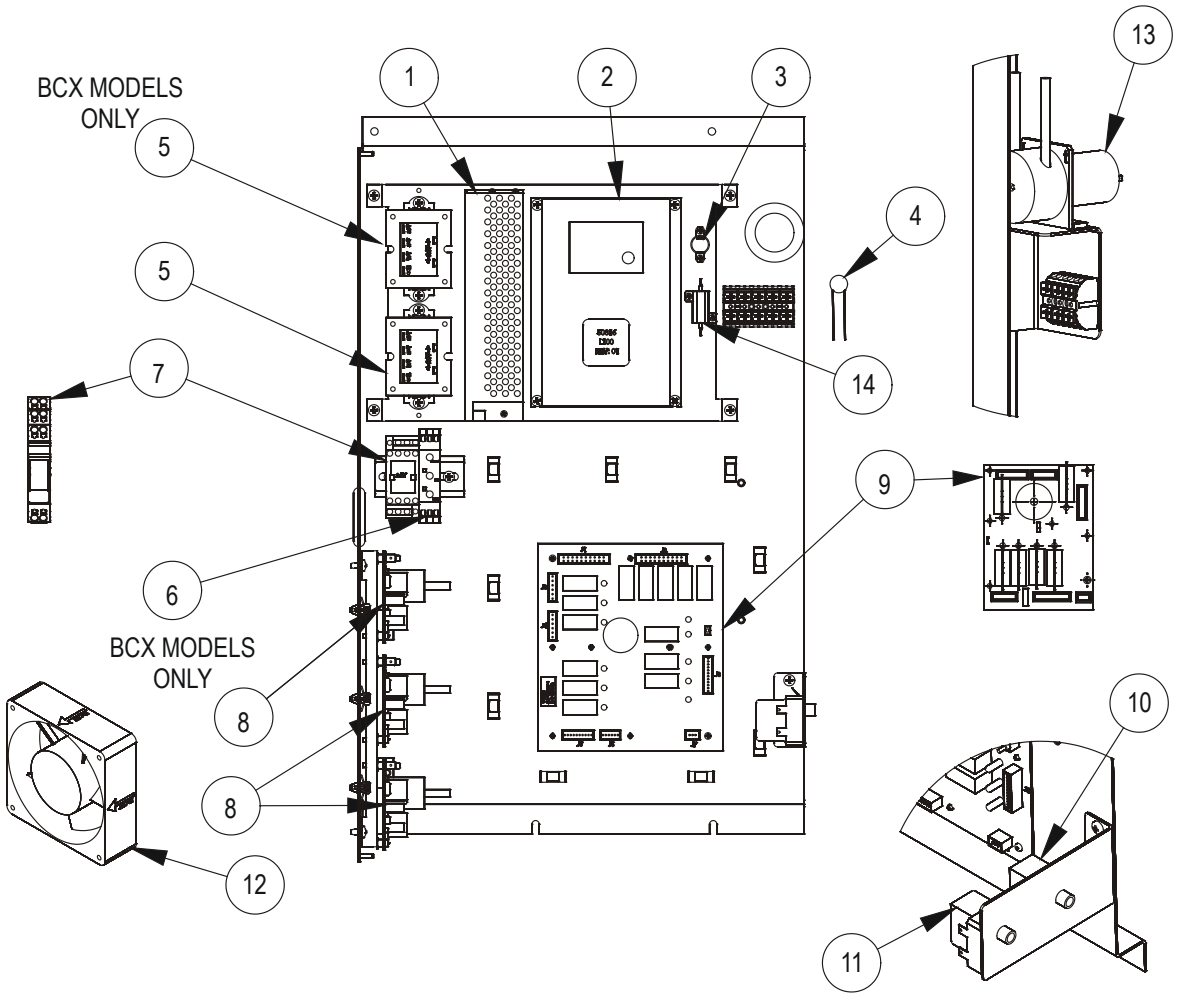

Ref. No.	Part No.	Description
1	52946	POWER SUPPLY, 24 VDC
	M3166	FUSE, POWER SUPPLY
2	58477	INVERTER DRIVE, 120 VOLT MODELS
	58477	INVERTER DRIVE, 208-240 VOLT MODELS
3	R8015	THERMOSTAT, COOLING FAN
4	39998	THERMISTOR, 5 OHM
5	38303	TRANSFORMER, 120-240 VOLT PRI. TO 24 VOLT SEC.
6	39784	MULTIFUNCTION TIMER, MOTOR REVERSING
7	39786	24 VOLT RELAY, BCX & BX MODELS ONLY
	38604	24 VOLT RELAY, CNVX MODELS ONLY
8	20348	IGNITION CONTROL

Ref. No.	Part No.	Description
9	39672	INTERFACE BOARD, BCX & BX MODELS ONLY
	50669	RELAY BOARD, CNVX MODELS ONLY
10	36441	CAVITY HIGH LIMIT THERMOSTAT (OPENS AT 671°F)
11	R2630	BOILER HIGH LIMIT THERMOSTAT, BCX MODELS ONLY (OPENS AT 248°F)
12	52947	COOLING FAN, 24 VDC
13	50321	PUMP, 24VDC BCX MODELS ONLY
	39250	1/4" STRAIGHT BARB
	54001	PUMP CARTRIDGE
	50532	1/4" 90° BARB
14	53948	RESISTOR, LIGHT (FOR MODELS WITH 3 CAVITY LIGHTS ONLY)

ELECTRICAL SYSTEM
ELECTRIC OVENS WITH MANUAL CONTROLS

BCX/BX MODELS BEFORE 9-15-2010
CNVX MODELS BEFORE 12-27-2010

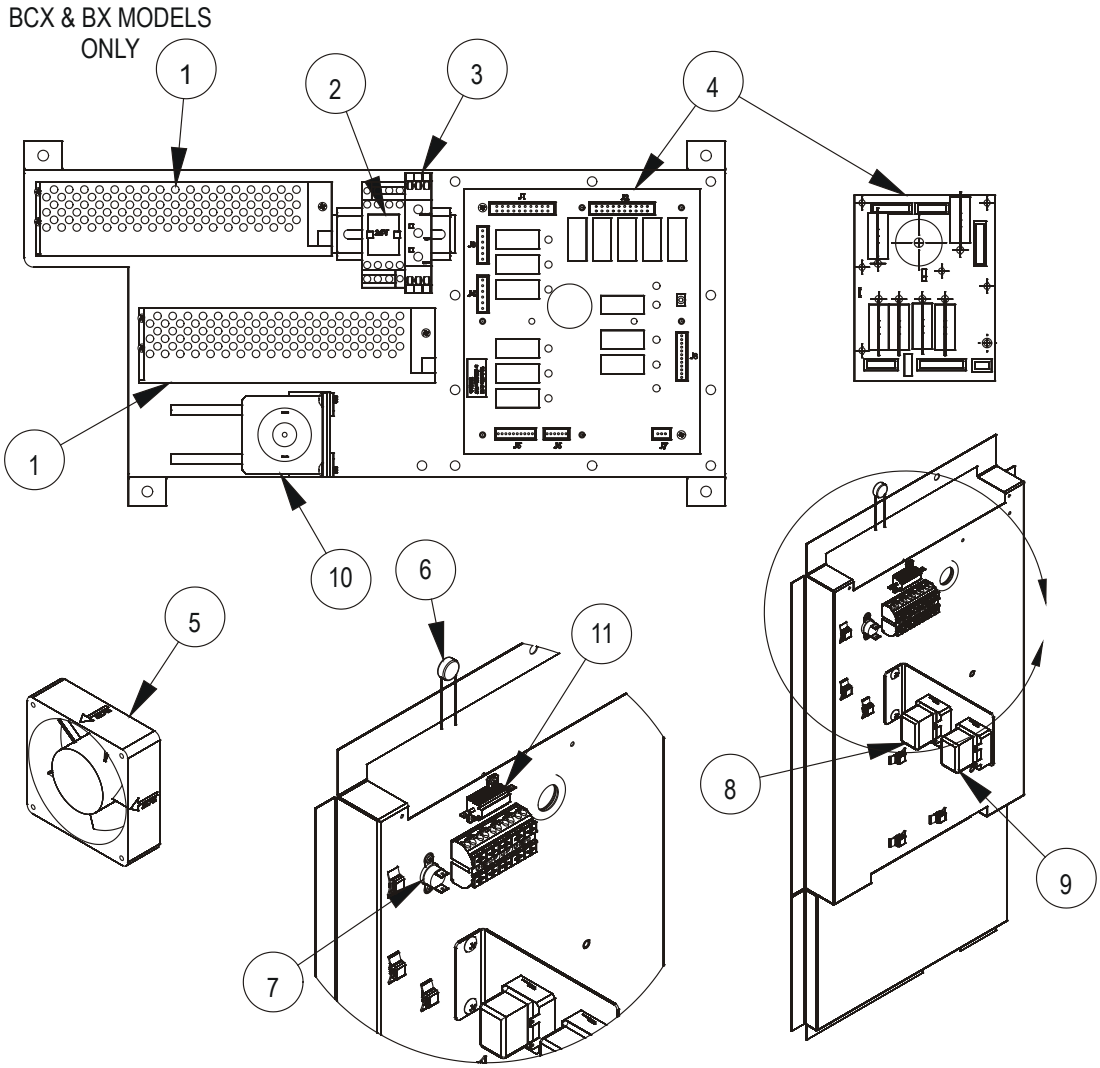

Ref. No.	Part No.	Description
1	52946	POWER SUPPLY, 24 VDC
	M3166	FUSE, POWER SUPPLY
2	39786	24 VOLT RELAY
3	39784	MULTIFUNCTION TIMER, MOTOR REVERSING
4	39672	INTERFACE BOARD, BCX & BX MODELS ONLY
	39130	RELAY BOARD, CNVX MODELS ONLY
5	52947	COOLING FAN, 24 VDC
6	39998	THERMISTOR, 5 OHM
7	R8015	THERMOSTAT, COOLING FAN
8	36441	CAVITY HIGH LIMIT THERMOSTAT (OPENS AT 671°F)
9	R2630	BOILER HIGH LIMIT THERMOSTAT, BCX MODELS ONLY(OPENS AT 248°F)
10	50321	PUMP 24VDC, BCX MODELS ONLY
	39250	1/4" STRAIGHT BARB
	54001	PUMP CARTRIDGE
	50532	1/4" 90° BARB
11	53948	RESISTOR, LIGHT (FOR MODELS WITH 3 CAVITY LIGHTS ONLY)
	100341	INVERTER DRIVE
	51516	INVERTER DRIVE PROBE
	50107	REAR HARNESS

ELECTRICAL SYSTEM
GAS OVENS WITH MENUSELECT, MANUAL OR SMART TOUCH

BCX/BX MANUAL CONTROL MODELS AFTER 9-15-2010
CNVX MANUAL CONTROL MODELS AFTER 12-27-2010
BCX/BX/CNVX MENUSELECT MODELS
BX/CNVX SMART TOUCH CONTROL MODELS

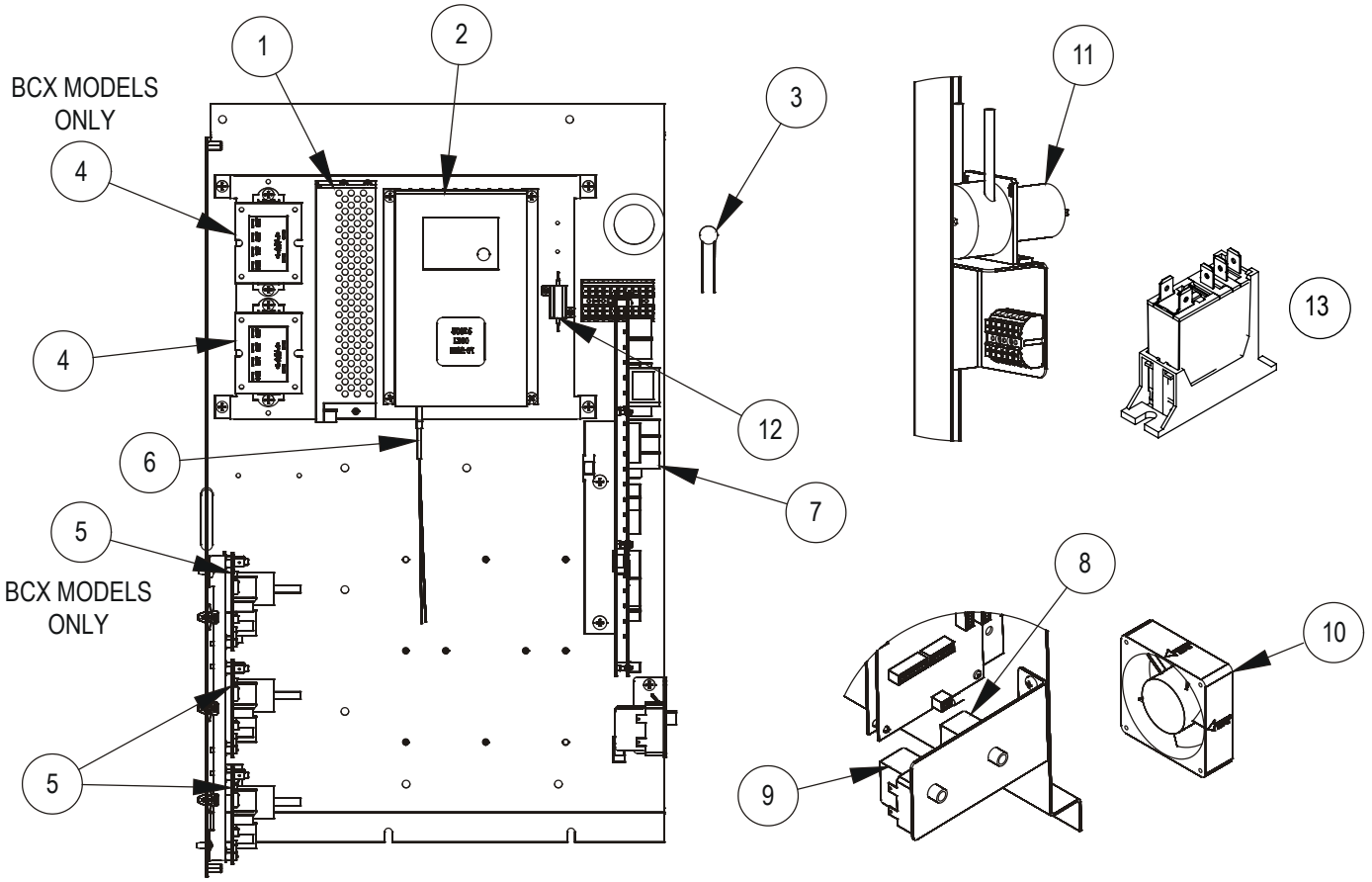

Ref. No.	Part No.	Description
1	52946	POWER SUPPLY, 24 VDC
	M3166	FUSE, POWER SUPPLY
2	58477	INVERTER DRIVE, 120 VOLT OR 208-240 VOLT MODELS
	100262	COMBI INVERTER DRIVE V-CRL, AFTER 8/1/2017
3	39998	THERMISTOR, 5 OHM
4	38303	TRANSFORMER, 120-240 VOLT PRI. TO 24 VOLT SEC.
5	20348	IGNITION CONTROL
6	51516	INVERTER PROBE
7	54380	I/O BOARD, MANUAL OR MENUSELECT
	57727	I/O BOARD, MANUAL, AFTER 8/7/17
	53206	I/O BOARD SMART TOUCH CONTROL, BEFORE 11/8/13
	57727	I/O BOARD, SMART TOUCH CONTROL, AFTER 11/8/13
8	36441	CAVITY HIGH LIMIT THERMOSTAT (OPENS AT 671°F)
9	R2630	BOILER HIGH LIMIT THERMOSTAT, BCX MODELS ONLY (OPENS AT 248°F)
10	52947	COOLING FAN, 24 VDC
11	50321	PUMP 24VDC BCX MODELS ONLY
	54001	PUMP CARTRIDGE
12	53948	RESISTOR, LIGHT (FOR MODELS WITH 3 CAVITY LIGHTS ONLY)
13	36446	RELAY, 24VDC, SMART TOUCH MODELS AFTER 9-8-2013, MANUAL & MENUSELECT MODELS AFTER 2-19-2014

ELECTRICAL SYSTEM
ELECTRIC OVENS WITH MENUSELECT, MANUAL OR SMART TOUCH

BCX/BX MANUAL CONTROL MODELS AFTER 9-15-2010
CNVX MANUAL CONTROL MODELS AFTER 12-27-2010
BCX/BX/CNVX MENUSELECT MODELS
BX/CNVX SMART TOUCH CONTROL MODELS

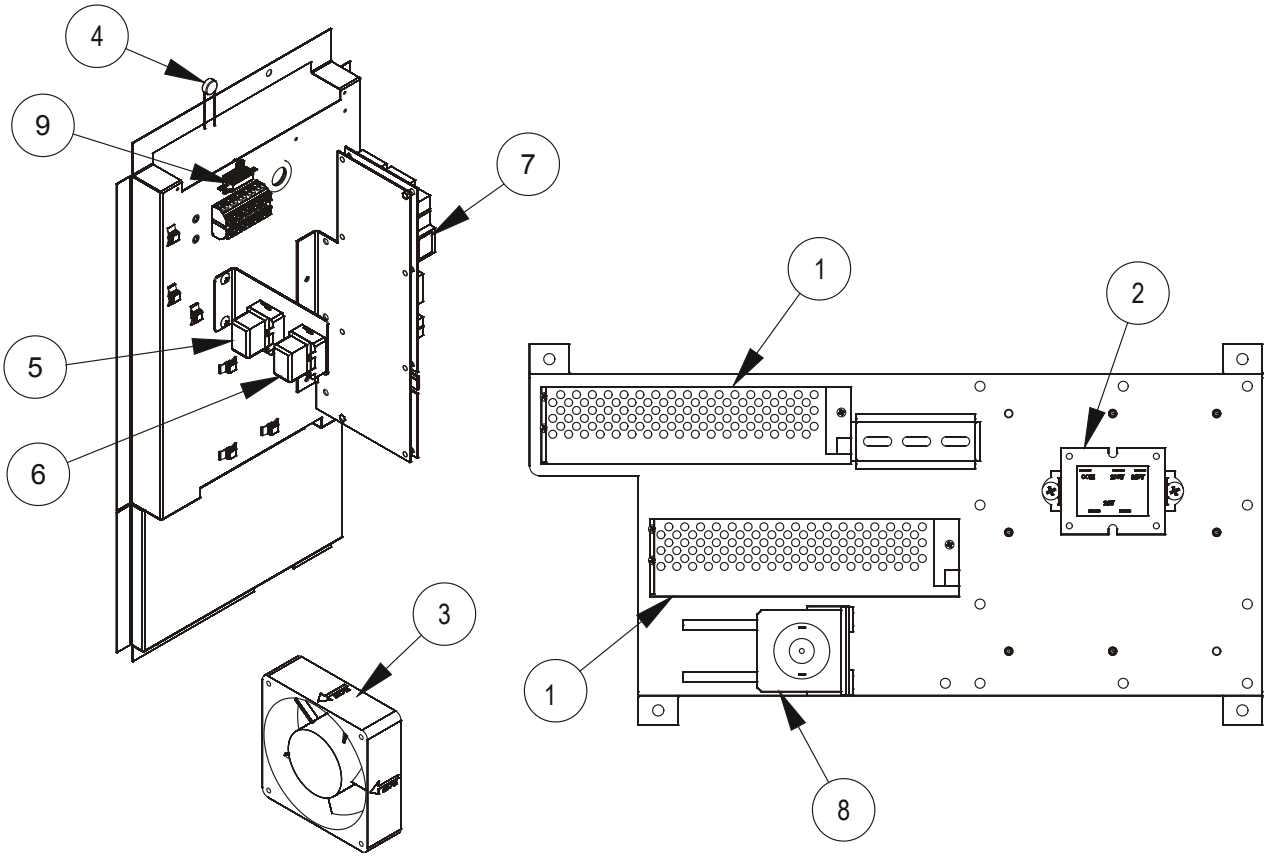

Ref. No.	Part No.	Description
1	52946	POWER SUPPLY, 24 VDC
	M3166	FUSE, POWER SUPPLY
2	52948	TRANSFORMER, 208-240 VOLT PRI. TO 24 VOLT SEC.
3	52947	COOLING FAN, 24 VDC
4	39998	THERMISTOR, 5 OHM
5	36441	CAVITY HIGH LIMIT THERMOSTAT (OPENS AT 671°F)
6	R2630	BOILER HIGH LIMIT THERMOSTAT, BCX MODELS ONLY (OPENS AT 248°F) (BEFORE 2/9/2012)
	54600	BOILER HIGH LIMIT THERMOSTAT BCX MODELS ONLY (OPENS AT 248°F) (AFTER 2/9/2012)
	57727	I/O BOARD, MANUAL, AFTER 8/7/17

Ref. No.	Part No.	Description
7	54380	INTERFACE BOARD, MANUAL OR MENUSELECT (BEFORE 8/7/17 FOR MANUAL)
	57727	I/O BOARD, SMART TOUCH CONTROL, AFTER 11/8/13
	53206	I/O BOARD SMART TOUCH CONTROL
8	50321	PUMP 24VDC, BCX MODELS ONLY
	54001	PUMP CARTRIDGE
9	53948	RESISTOR, LIGHT (FOR MODELS WITH 3 CAVITY LIGHTS ONLY)
	100341	INVERTER DRIVE ASSY, BEFORE 8/1/2017
	58799	COMBI INVERTER DRIVE V-CONTROL, AFTER 8/1/2017
	58371	COMBI INVERTER DRIVE V-CONTROL, AFTER 1/1/2019
	51516	INVERTER DRIVE PROBE

GAS BOILER

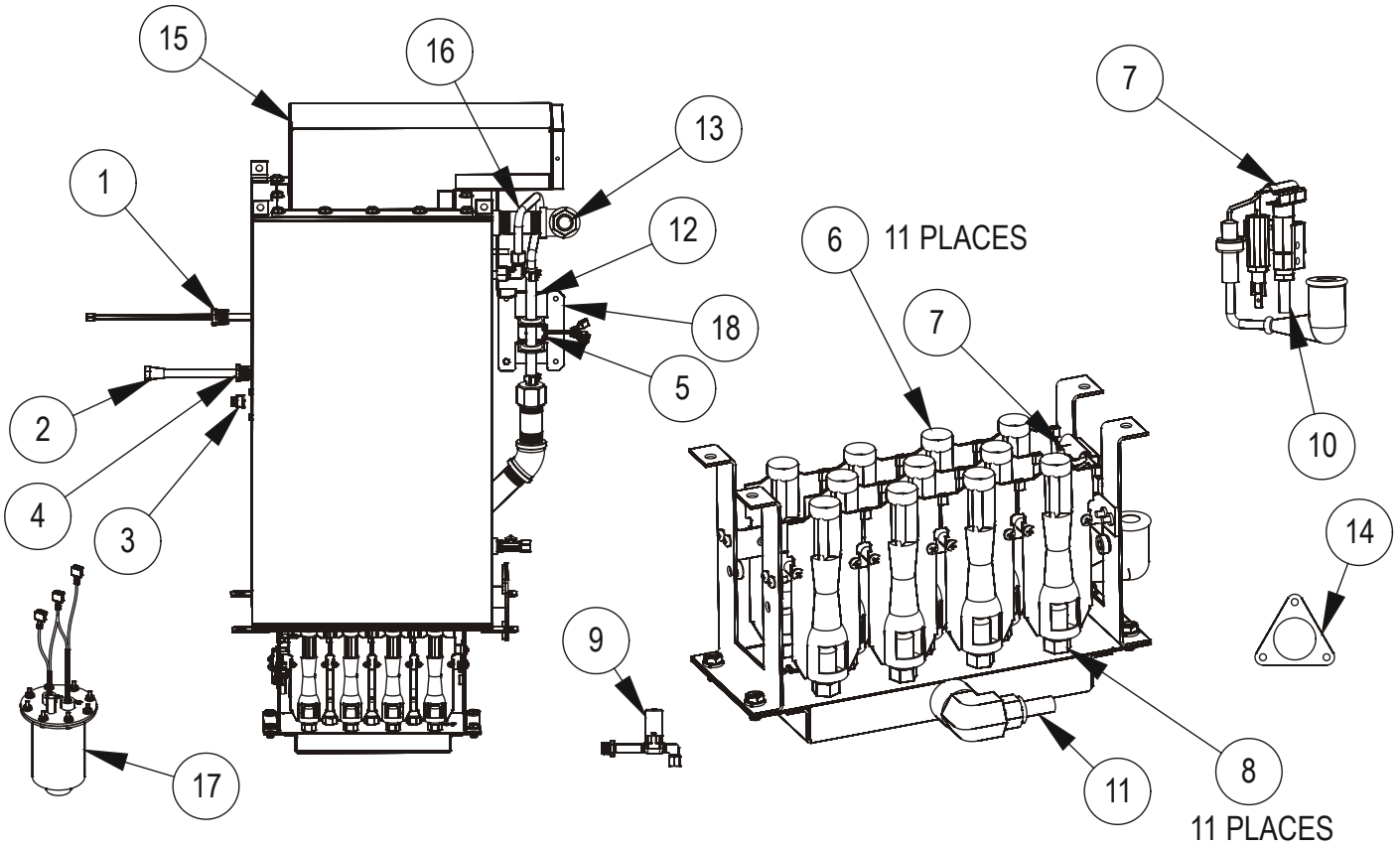

GAS BOILER

Ref. No.	Part No.	Description
1	39682	SWITCH, "STEAM READY" MANUAL CONTROL MODELS BEFORE 9-15-10
	39800	PROBE, "STEAM READY" ALL CONTROLS AFTER 9-15-10
2	R8071	PROBE HOLDER
3	R8012	THERMOSTAT, MANUAL CONTROL MODELS BEFORE 9-15-10 ONLY
4	R10627	PROBE HOLDER BUSHING
5	54048	WATER SENSOR (AFTER 2-17-11)
6	R4287	INSHOT BURNER
7	57662	PILOT ASSEMBLY, NATURAL GAS
	57663	PILOT ASSEMBLY, PROPANE GAS
	R4633	FLAME SENSOR WIRE
8	R11157	ORIFICE, #58 NATURAL GAS
	R8933	ORIFICE, #71 PROPANE GAS
9	58487	SOLENOID, WATER (ALL EXCEPT MANUAL CONTROL BEFORE 9-15-10) ON BOILER OR WATER INLET
10	52955	FLEX TUBE W/FITTINGS, 1/4 OD x 30" LONG
11	50256	GAS SUPPLY TUBE
12	52753	HOSE, HIGH-TEMP SILICONE (BY THE INCH)
	54155	CLAMP, HOSE SNAP-LOCK
13	R7406	STEAM OUTLET HOSE, 3/4" ID (BY THE INCH
14	R10252	DRAIN GASKET
15	R10898	FLUE ASSEMBLY
	38660	ROPE GASKET (BY THE FOOT)
16	57278	TRAP TUBE
17	50283	FLOAT ASSEMBLY
18	55513	WATER SENSOR CONTROL BOARD
	R8928	BURNER ASSY, NATURAL GAS (INCLUDES ITEMS 6, 7, & 8)
	R8932	BURNER ASSY, PROPANE GAS (INCLUDES ITEMS 6, 7, & 8)
	54159	MECHANICAL FLOAT TO SENSOR UPGRADE KIT, MANUAL CONTROLS BEFORE 10-7-10
	54160	MECHANICAL FLOAT TO SENSOR UPGRADE KIT, MENUSELECT CONTROLS OR BEFORE 10-7-10
	53296	BOILER SHELL W/INSULATION ONLY
	57568	COMPLETE BOILER ASSY, NATURAL GAS MANUAL CONTROLS BEFORE 9-15-10
	57569	COMPLETE BOILER ASSY, PROPANE GAS MANUAL CONTROLS BEFORE 9-15-10
	57570	COMPLETE BOILER ASSY (NAT) MENUSELECT CONTROL, BEFORE 9-15-10
	57571	COMPLETE BOILER ASSY (LP) MENUSELECT CONTROLS, BEFORE 9-15-10
	57570	COMPLETE BOILER ASSY, NATURAL GAS ALL CONTROLS AFTER 9-15-10
	57571	COMPLETE BOILER ASSY, PROPANE GAS ALL CONTROLS AFTER 9-15-10

ELECTRIC BOILER

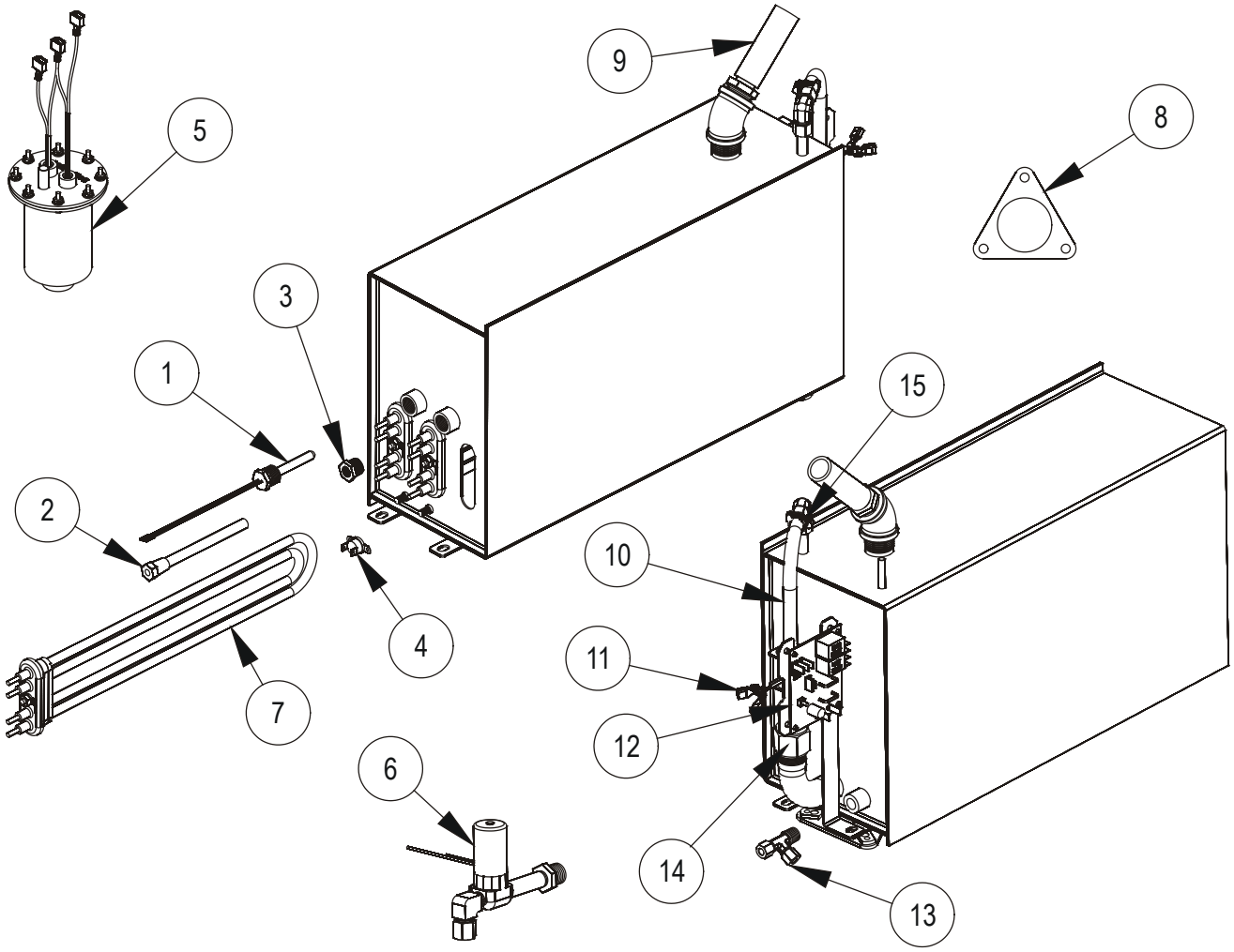

Ref. No.	Part No.	Description
1	39682	SWITCH, "STEAM READY" MANUAL CONTROL MODELS BEFORE 9-15-10
	39800	PROBE, "STEAM READY" ALL CONTROLS AFTER 9-15-10
2	R8071	PROBE HOLDER
3	R10627	PROBE HOLDER BUSHING
4	R8012	THERMOSTAT, MANUAL CONTROL MODELS BEFORE 9-15-10 ONLY
5	50283	FLOAT SWITCH ASSEMBLY
6	58487	SOLENOID, WATER (ALL EXCEPT MANUAL CONTROL BEFORE 9-15-10) ON BOILER OR WATER INLET
7	R2768	STEAM ELEMENT, 208 VOLT, BEFORE 2/9/2012
	R2771	STEAM ELEMENT, 240 VOLT, BEFORE 2/9/2012
	R2770	STEAM ELEMENT, 480 VOLT, BEFORE 2/9/2012
8	R10252	DRAIN GASKET

Ref. No.	Part No.	Description
9	R7406	STEAM OUTLET HOSE, 3/4" ID (BY THE INCH)
10	52753	HOSE, HIGH-TEMP SILICONE (BY THE INCH
	54155	CLAMP, HOSE SNAP-LOCK
11	54048	WATER SENSOR (AFTER 2-17-11)
12	55513	WATER SENSOR CONTROL BOARD
13	39808	FITTING, TEE 1/4" NPT X 1/4" COMPRESSION
14	52754	ADAPTER, BARBED HOSE FITTING
15	53995	DELIME BARB, S/S
	54156	MECHANICAL FLOAT TO SENSOR UPGRADE KIT, MANUAL CONTROLS BEFORE 9-15-10
	54157	MECHANICAL FLOAT TO SENSOR UPGRADE KIT, MENUSELECT BEFORE 9-15-10
	53550	ELEMENT DRIP PAN KIT

ELECTRIC BOILER

Ref. No.	Part No.	Description
	54478	HIGH LIMIT UPGRADE 208V, BEFORE 2/9/2012
	54679	HIGH LIMIT UPGRADE 240V, BEFORE 2/9/2012
	54680	HIGH LIMIT UPGRADE 480V, BEFORE 2/9/2012
	R2768	STEAM ELEMENT (LEFT OR RIGHT), 208 VOLT, AFTER 2/9/2012
	55364	STEAM ELEMENT (CENTER), 208 VOLT, AFTER 2/9/2012
	R2771	STEAM ELEMENT (LEFT OR RIGHT), 240 VOLT, AFTER 2/9/2012
	55365	STEAM ELEMENT (CENTER), 240 VOLT, AFTER 2/9/2012
	R2770	STEAM ELEMENT (LEFT OR RIGHT), 480 VOLT, AFTER 2/9/2012
	55366	STEAM ELEMENT (CENTER), 480 VOLT, AFTER 2/9/2012
	54976	BOILER ASSY, INSULATED W/ ELEMENTS 208V BEFORE 2/9/2012
	54977	BOILER ASSY, INSULATED W/ ELEMENTS 240V BEFORE 2/9/2012
	54978	BOILER ASSY, INSULATED W/ ELEMENTS 480V BEFORE 2/9/2012
	54979	BOILER ASSY, INSULATED W/ ELEMENTS 208V AFTER 2/9/2012
	54980	BOILER ASSY, INSULATED W/ ELEMENTS 240V AFTER 2/9/2012
	54981	BOILER ASSY, INSULATED W/ ELEMENTS 480V AFTER 2/9/2012
	54982	BOILER ASSY, COMPLETE W/ ELEMENTS MANUAL CONTROL 208V BEFORE 9/15/2010
	54983	BOILER ASSY, COMPLETE W/ ELEMENTS MANUAL CONTROL 240V BEFORE 9/15/2010
	54984	BOILER ASSY, COMPLETE W/ ELEMENTS MANUAL CONTROL 480V BEFORE 9/15/2010
	54985	BOILER ASSY, COMPLETE W/ ELEMENTS MANUAL CONTROL 208V AFTER 9/15/2010 AND BEFORE 2/9/2012
	54986	BOILER ASSY, COMPLETE W/ ELEMENTS MANUAL CONTROL 240V AFTER 9/15/2010 AND BEFORE 2/9/2012
	54987	BOILER ASSY, COMPLETE W/ ELEMENTS MANUAL CONTROL 480V AFTER 9/15/2010 AND BEFORE 2/9/2012
	54988	BOILER ASSY, COMPLETE W/ ELEMENTS MANUAL CONTROL 208V AFTER 2/9/2012
	54989	BOILER ASSY, COMPLETE W/ ELEMENTS MANUAL CONTROL 240V AFTER 2/9/2012
	54990	BOILER ASSY, COMPLETE W/ ELEMENTS MANUAL CONTROL 480V AFTER 2/9/2012
	54985	BOILER ASSY, COMPLETE W/ ELEMENTS MENUSELECT CONTROL 208V BEFORE 2/9/2012
	54986	BOILER ASSY, COMPLETE W/ ELEMENTS MENUSELECT CONTROL 240V BEFORE 2/9/2012
	54987	BOILER ASSY, COMPLETE W/ ELEMENTS MENUSELECT CONTROL 480V BEFORE 2/9/2012
	54988	BOILER ASSY, COMPLETE W/ ELEMENTS MENUSELECT CONTROL 208V AFTER 2/9/2012
	54989	BOILER ASSY, COMPLETE W/ ELEMENTS MENUSELECT CONTROL 240V AFTER 2/9/2012
	54990	BOILER ASSY, COMPLETE W/ ELEMENTS MENUSELECT CONTROL 480V AFTER 2/9/2012

HOT AIR & HI-VOLT ELECTRIC MODELS

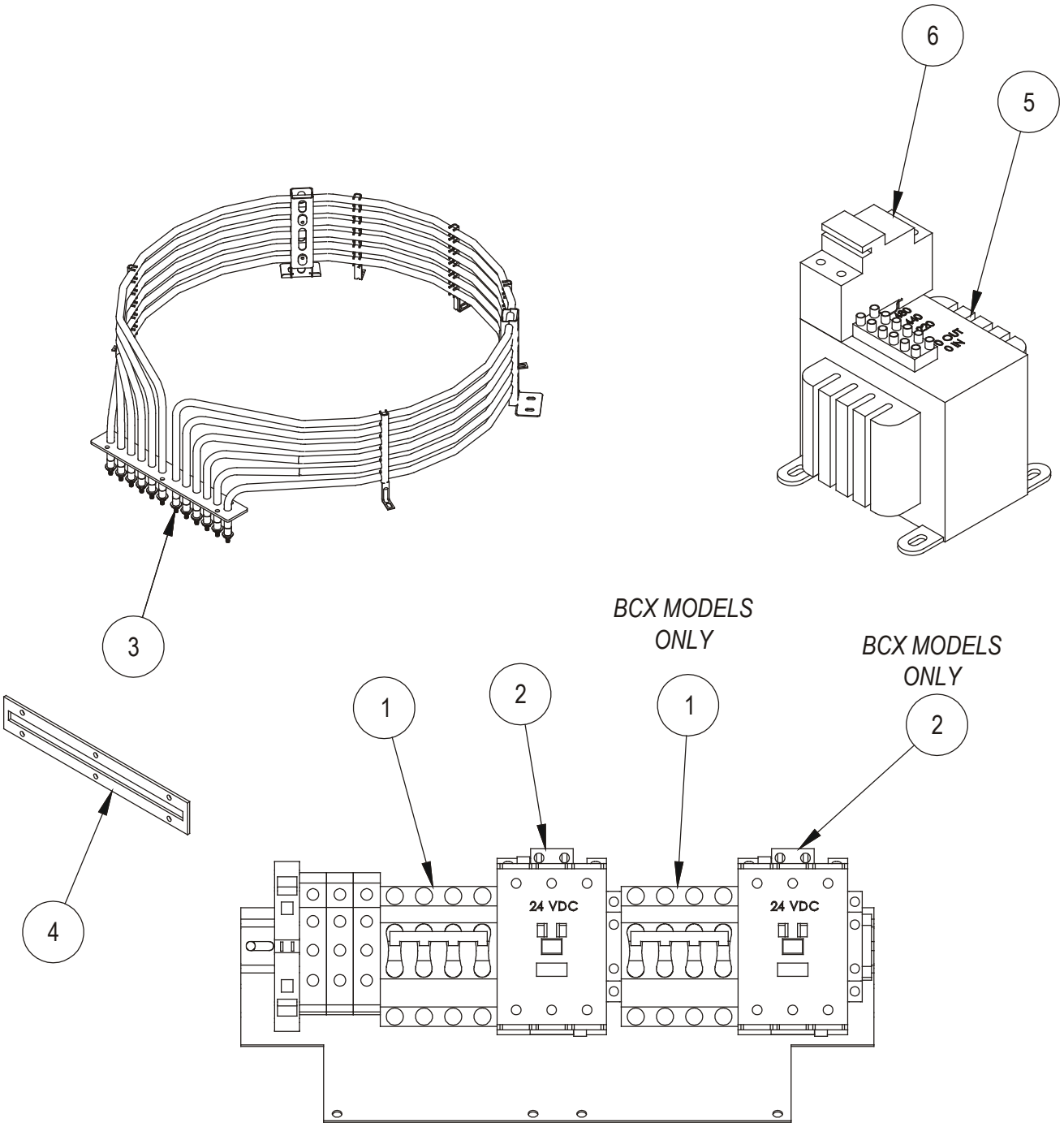

Ref. No.	Part No.	Description
1	39804	CIRCUIT BREAKER 60 AMP, 208-240 VOLT MODELS ONLY
	39113	CIRCUIT BREAKER 32 AMP, 480 VOLT MODELS ONLY
2	50096	CONTACTOR
3	51543	ELEMENT ASSEMBLY W/GASKET, 208 VOLT MODELS
	51544	ELEMENT ASSEMBLY W/GASKET, 240 OR 480 VOLT MODELS
4	39367	ELEMENT GASKET
5	51458	480 VOLT STEP DOWN TRANSFORMER
6	R11114	TERMINAL STRIP GRAY (QTY 3)
7	R11115	TERMINAL STRIP (GREEN)

HOT AIR & GAS VALVES GAS MODELS

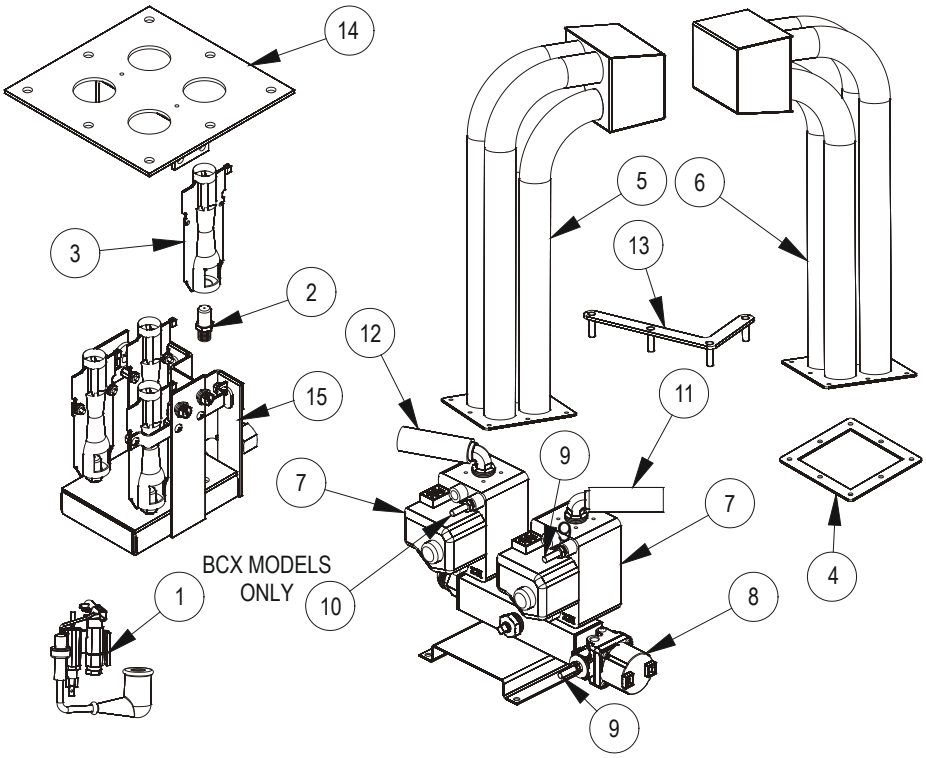

Ref. No.	Part No.	Description
1	57660	PILOT ASSEMBLY, HOT AIR NATURAL GAS
	57661	PILOT ASSEMBLY, HOT AIR PROPANE GAS
	R4633	FLAME SENSOR WIRE
2	R8973	ORIFICE, NATURAL GAS 1.35MM
	R8974	ORIFICE, PROPANE GAS #67
3	R4287	INSHOT BURNER
4	R10516	HEAT EXCHANGER GASKET
	R8856	GASKET TAPE UPPER HEAT EXCHANGER
5	52950	LH HEAT EXCHANGER W/HDWE & BRACKETS, BCX, & CNVX MODELS WITH MANUAL OR SMART TOUCH CONTROLS
	52950	LH HEAT EXCHANGER W/HDWE & BRACKETS, BCX & CNVX MODELS WITH MENUSELECT CONTROLS AFTER 3-23-10
10	52953	LH HEAT EXCHANGER W/HDWE & BRACKETS, BX MODELS
	52953	LH HEAT EXCHANGER W/HDWE & BRACKETS, BCX MODELS WITH BEFORE 3-23-10
6	52951	RH HEAT EXCHANGER W/HDWE & BRACKETS, BCX, & CNVX MODELS WITH MANUAL OR SMART TOUCH CONTROLS
	52951	RH HEAT EXCHANGER W/HDWE & BRACKETS, BCX & CNVX MODELS WITH MENUSELECT CONTROLS AFTER 3-23-10
	52954	RH HEAT EXCHANGER W/HDWE & BRACKETS, BX MODELS
	52954	RH HEAT EXCHANGER W/HDWE & BRACKETS, BCX MODELS WITH MENUSELECT CONTROLS BEFORE 3-23-10
7	30005	VALVE, 24 VOLT NATURAL GAS
	30006	VALVE, 24 VOLT PROPANE GAS
8	R6490	PILOT VALVE, 25 VOLT
9	52952	FLEX TUBE & FITTINGS, 1/4" OD X 48" LONG
10	52955	FLEX TUBE & FITTINGS, 1/4" OD X 30" LONG
11	50257	GAS SUPPLY TUBE
12	50256	GAS SUPPLY TUBE
	39787	FLEX TUBE ASSY, 3/4" X 24" (FROM BACK OF OVEN TO MANIFOLD)
13	R10982	HEAT EXCHANGER BRACKET
14	R8971	BURNER MOUNTING ASSY.
15	R9241	BURNER ASSY

INTERIOR & EXTERIOR PARTS

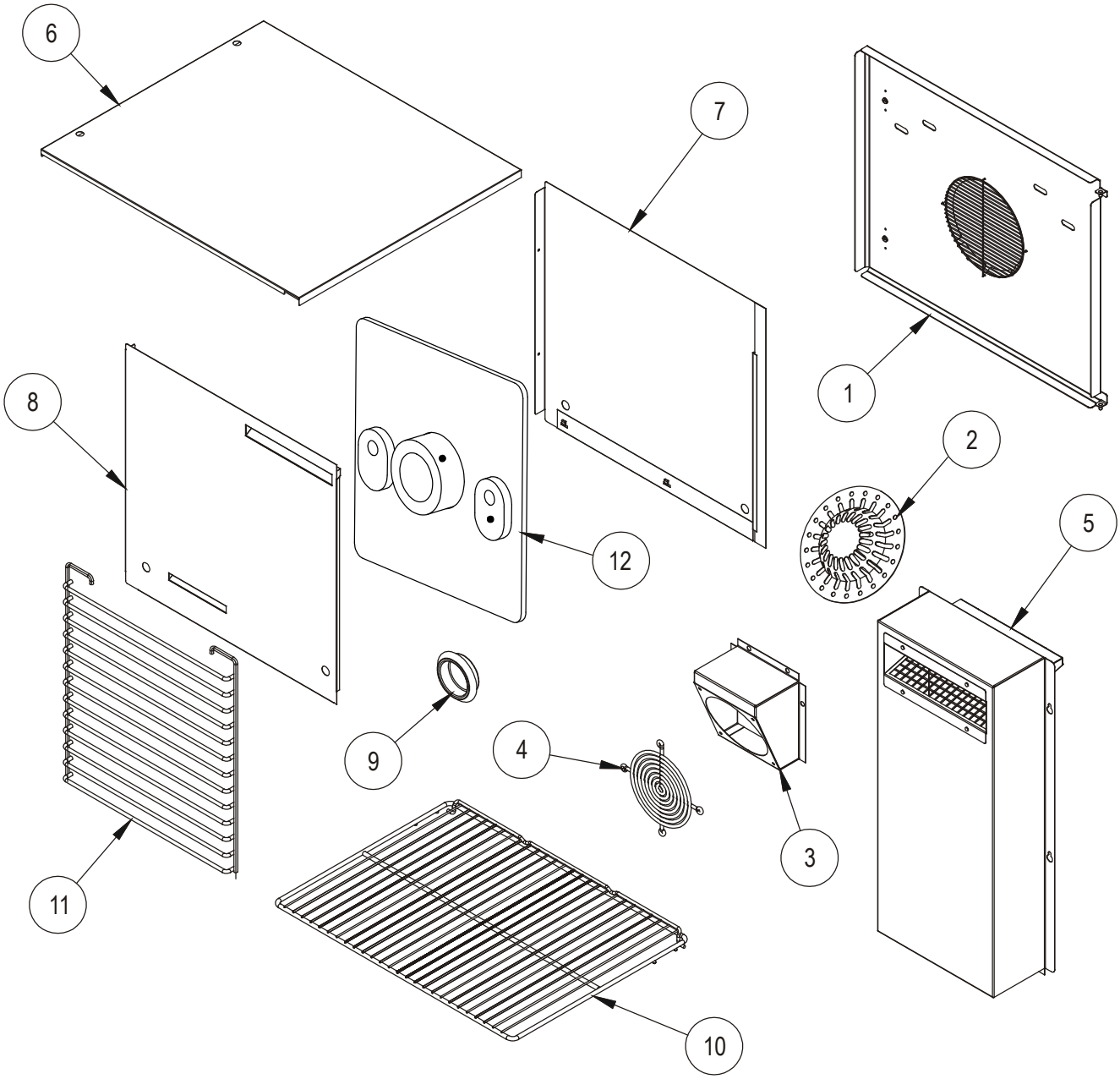

Ref. No.	Part No.	Description
1	50452	BAFFLE ASSEMBLY, BCX AND CNVX MODELS
	50452	BAFFLE ASSY., BX MODELS BEFORE 11/18/13
	57112	BAFFLE ASSY., BX MODELS AFTER 11/18/13
2	50506	DRAIN COVER
3	39588	FAN HOUSING
4	M0571	FAN GUARD
5	52960	MOTOR VENT ASSEMBLY

Ref. No.	Part No.	Description
6	39199	BODY TOP
7	39200	BODYSIDE, RH
8	51381	BODYSIDE, LH ELECTRIC MODELS
	51325	BODYSIDE, LH GAS MODELS
9	50926	RECESSED PLUG
10	59046	WIRE RACK
11	54562	RACK SUPPORT - SET OF 2
	51236	RACK SUPPORT REPLACEMENT
12	R11385	PLATE, SOLENOID MOUNTING
	55057	VENT, SUCTION TUBE, BOLT ON

DOOR & RELATED PARTS

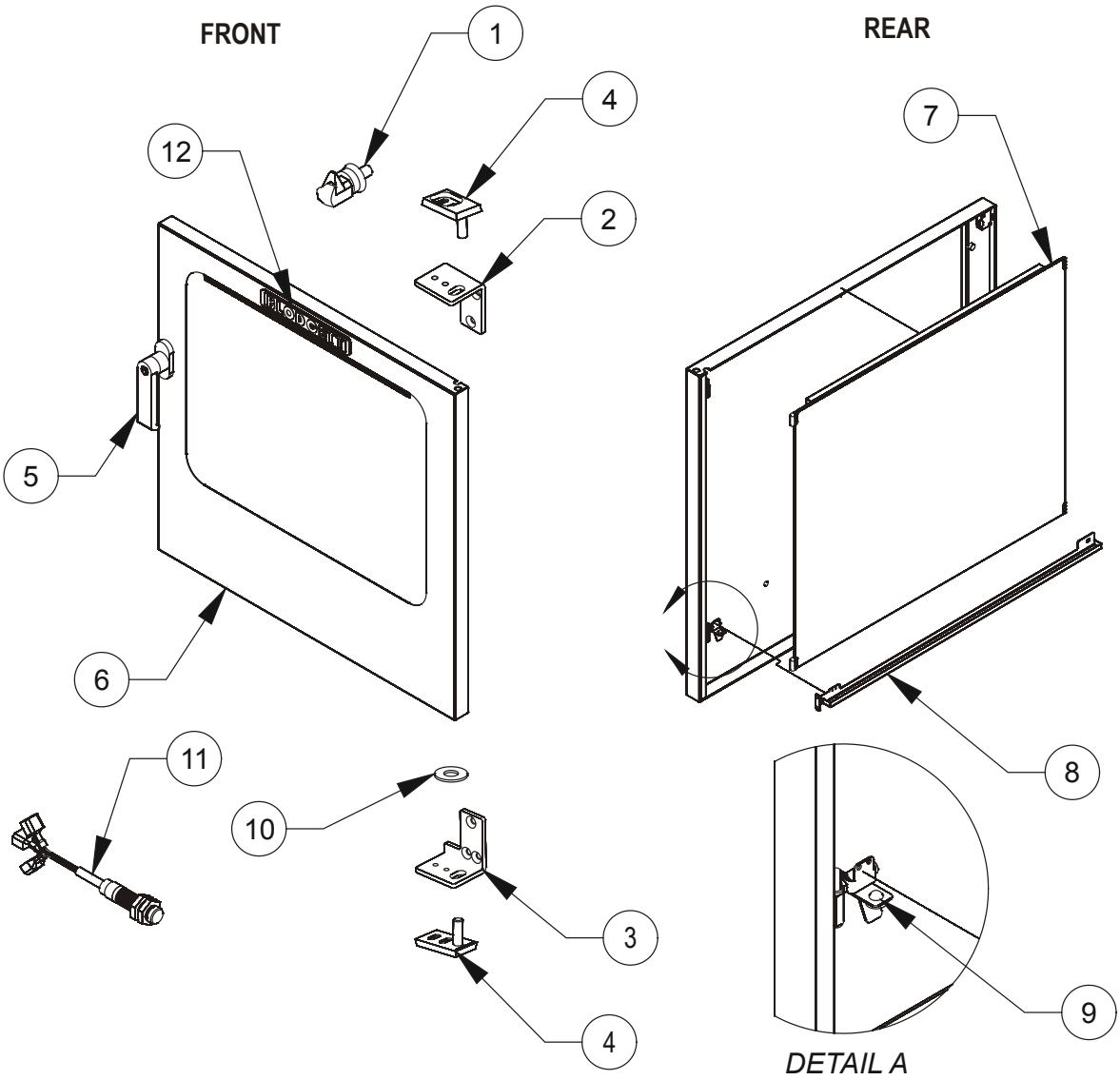

Ref. No.	Part No.	Description
1	57952	BODY LATCH
2	50194	UPPER DOOR HINGE
3	50195	LOWER DOOR HINGE
4	R6220	DOOR PIN
5	56385	DOOR HANDLE
6	50887	DOOR ASSY, OUTER, BEFORE 6/12/2011
6	56525	DOOR ASSY, OUTER, AFTER 6/12/2011
7	50888	DOOR ASSY, INNER, BEFORE 6/12/2011
7	57054	DOOR ASSY, INNER, AFTER 6/12/2011
8	50889	DRIP PAN, BEFORE 6/12/2011
8	54205	DRIP PAN, AFTER 6/12/2011
	39579	DOOR GASKET

Ref. No.	Part No.	Description
9	39893	DRIP PAN PLUG
10	39909	WASHER, .875 OD
	39337	DOOR SENSOR, MANUAL CONTROL BCX/BX MODELS, BEFORE 9/15/2010 CNVX MODELS, BEFORE 12/27/2010
	54273	DOOR SNESOR KIT, MANUAL CONTROLS BCX/BX MODELS, AFTER 9/15/2010 CNVX MODELS, AFTER 12/27/2010
11	54273	DOOR SENSOR KIT - MENUSELECT CONTROL
	54228	DOOR SENSOR ACTIVATOR (ON DOOR)
12	16470	NAMEPLATE, BLODGETT
	55593	DOOR STOP KIT

WATER SYSTEM

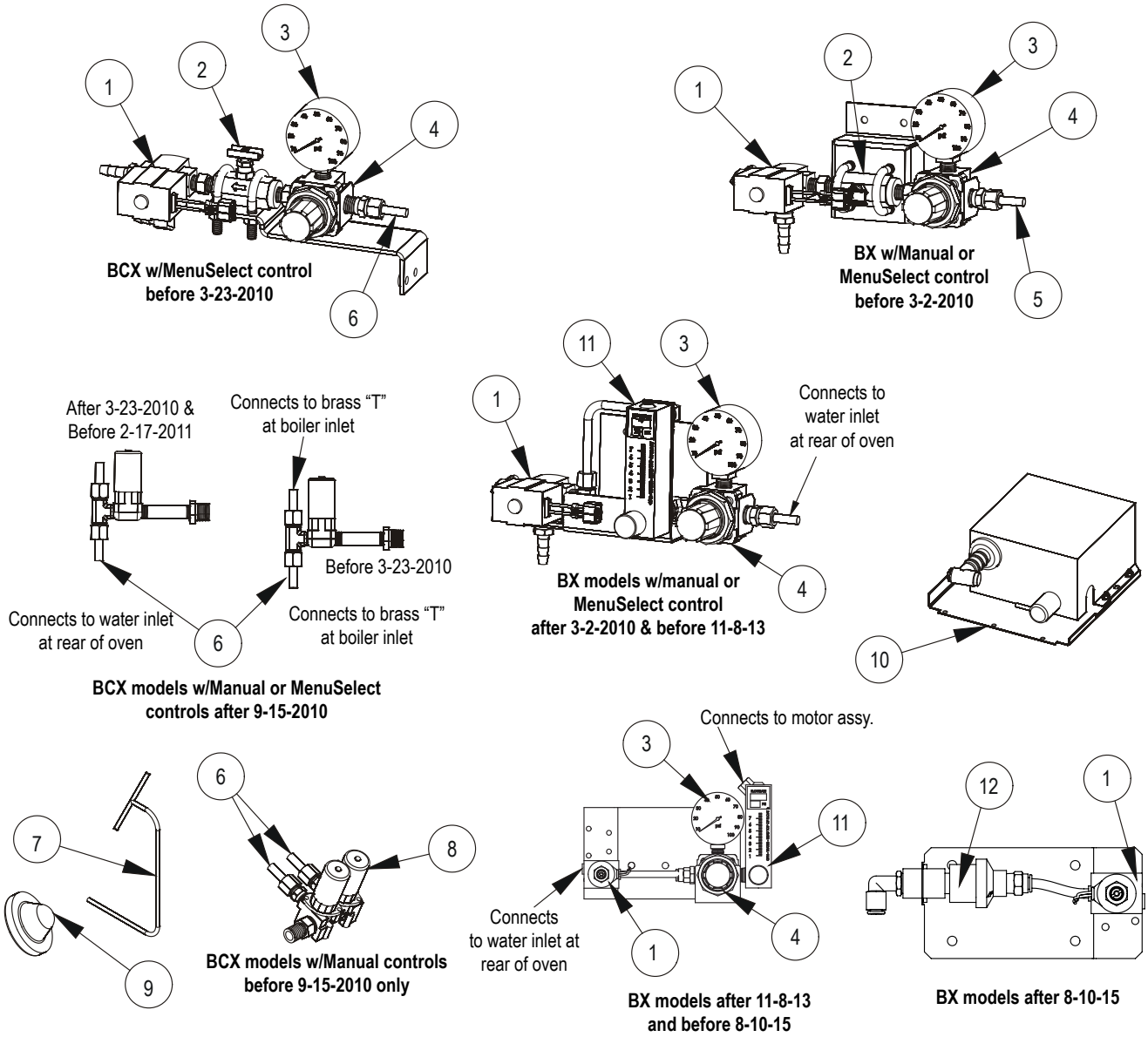

Ref. No.	Part No.	Description
1	50643	SOLENOID, 3 PORT (BEFORE 11-8-13)
	56652	SOLENOID, 24 VDC, BX MODELS (AFTER 11-8-13)
2	50656	NEEDLE VALVE
3	18411	PRESSURE GAUGE
4	50657	PRESSURE REGULATOR, 0-100 PSI
	51128	REGULATOR ASSEMBLY (INCLUDES ITEMS 3 & 4)
5	52955	FLEX TUBE W/FITTINGS, 1/4" OD X 30" LONG
6	52956	FLEX TUBE W/FITTINGS, 1/4" OD X 12" LONG
7	52957	WATER INJECTION TUBE W/FITTING (BEFORE 11-8-13)

Ref. No.	Part No.	Description
8	39795	SOLENOID, COIL, 24V
9	50261	HOSE FILTER
10	39462	HOSE REEL ASSEMBLY
	52998	SPRAY NOZZLE (PUSH BUTTON)
	R8179	GROMMET, HOSE REEL
11	53115	FLOWMETER, 0-7 GPH
	53426	NEEDLE VALVE TO FLOW METER UPGRADE KIT
	50010	TUBING, 1/4 ID SPRITZER WATER SUPPLY (BY THE FOOT)
12	54494	FLOW VALVE WITH ORIFICE

DRAIN & RAPID VENT SYSTEMS

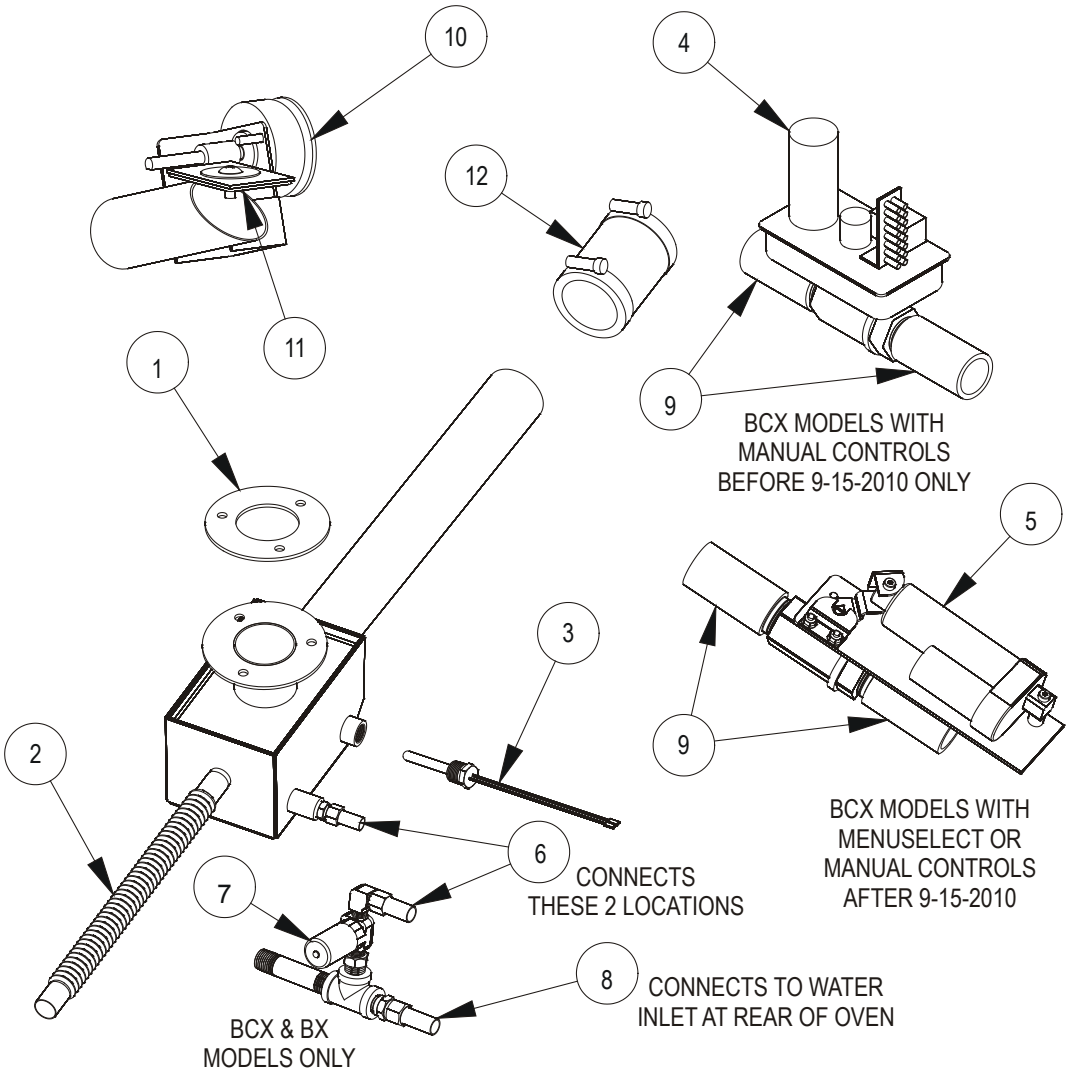

Ref. No.	Part No.	Description
1	59162	DRAIN GASKET
2	50423	DRIP PAN TUBE
3	39806	HIGH LIMIT SWITCH, ALL MODELS W/ MANUAL CONTROLS BEFORE 9-15-10 EXCEPT CNVX
	39800	HIGH LIMIT PROBE, ALL MODELS W/ MENUSELECT CONTROLS
	39800	HIGH LIMIT PROBE, ALL MODELS W/ MANUAL CONTROLS AFTER 9-15-10 EXCEPT CNVX
	39800	HIGH LIMIT PROBE, ALL MODELS W/ SMART TOUCH CONTROLS
4	39650	BOILER DRAIN VALVE W/BARBED FITTINGS
	R11514	BOILER DRAIN VALVE
5	51608	BOILER DRAIN VALVE
6	52956	FLEX TUBE W/FITTINGS, 1/4" OD x 12" LONG ALL MODELS EXCEPT CNVX

Ref. No.	Part No.	Description
7	58487	QUENCH SOLENOID
8	52952	FLEX TUBE W/FITTINGS, 1/4" OD x 48" LONG
9	39989	HOSE, 1-1/4 ID (BY THE INCH)
10	53008	ROTARY SOLENOID
11	50186	VENT GASKET, BCX OR CNVX MODELS
	50186	VENT GASKET, BX MODELS BEFORE 11-8-13
	55023	VENT GASKET, BX MODELS AFTER 11-8-13
	56775	VENT LID W/COUPLING UPGRADE
12	R7835	COUPLING
	51617	ELBOW, 1/4" NPT X 1/4" PTC
	52352	TUBING, 1/4" OD, GREEN (BY THE INCH)
	52353	TUBING, 1/4" OD, RED (BY THE INCH)

VENTING & STACKING

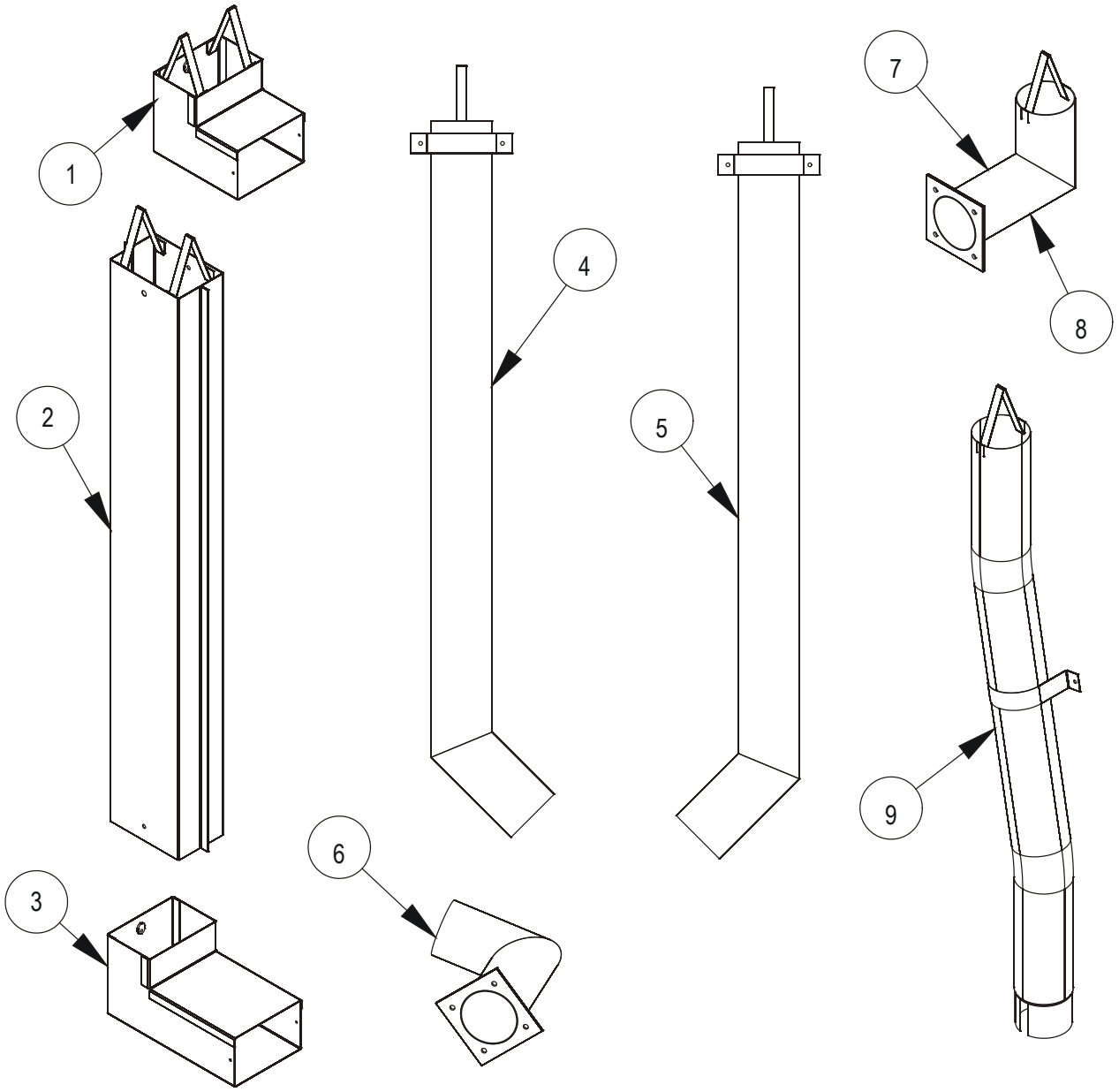

Ref. No.	Part No.	Description
1	R8806	EXHAUST FLUE, BOILER
2	R8808	EXHAUST FLUE EXTENSION, BOILER
3	R8805	EXHAUST FLUE, BOILER (BOTTOM OVENS ONLY)
4	R9237	FLUE EXTENSION, RH (AS VIEWED FROM FRONT OF OVEN)
5	R9238	FLUE EXTENSION, LH (AS VIEWED FROM FRONT OF OVEN)
6	R8990	EXHAUST FLUE (BOTTOM OVENS ONLY)
7	R8989	CAVITY VENT
8	R8989	EXHAUST FLUE (TOP OR SINGLE OVENS ONLY)

Ref. No.	Part No.	Description
9	53102	CAVITY VENT EXTENSION
	52963	STACKING KIT, ANY ELECTRIC MODEL ON ANY OTHER ELECTRIC MODEL
	52964	STACKING KIT, BCX GAS MODEL ON BCX GAS MODEL
	52977	STACKING KIT, BCX, BX, OR CNVX GAS MODELS ON BX, OR CNVX GAS MODELS
	53963	ADDITIONAL VENT EXTENSION, 12" STRAIGHT
	53898	ADDITIONAL VENT EXTENSION, 12" STRAIGHT WITH 45 DEG OFFSET

MOTOR & LIGHTS

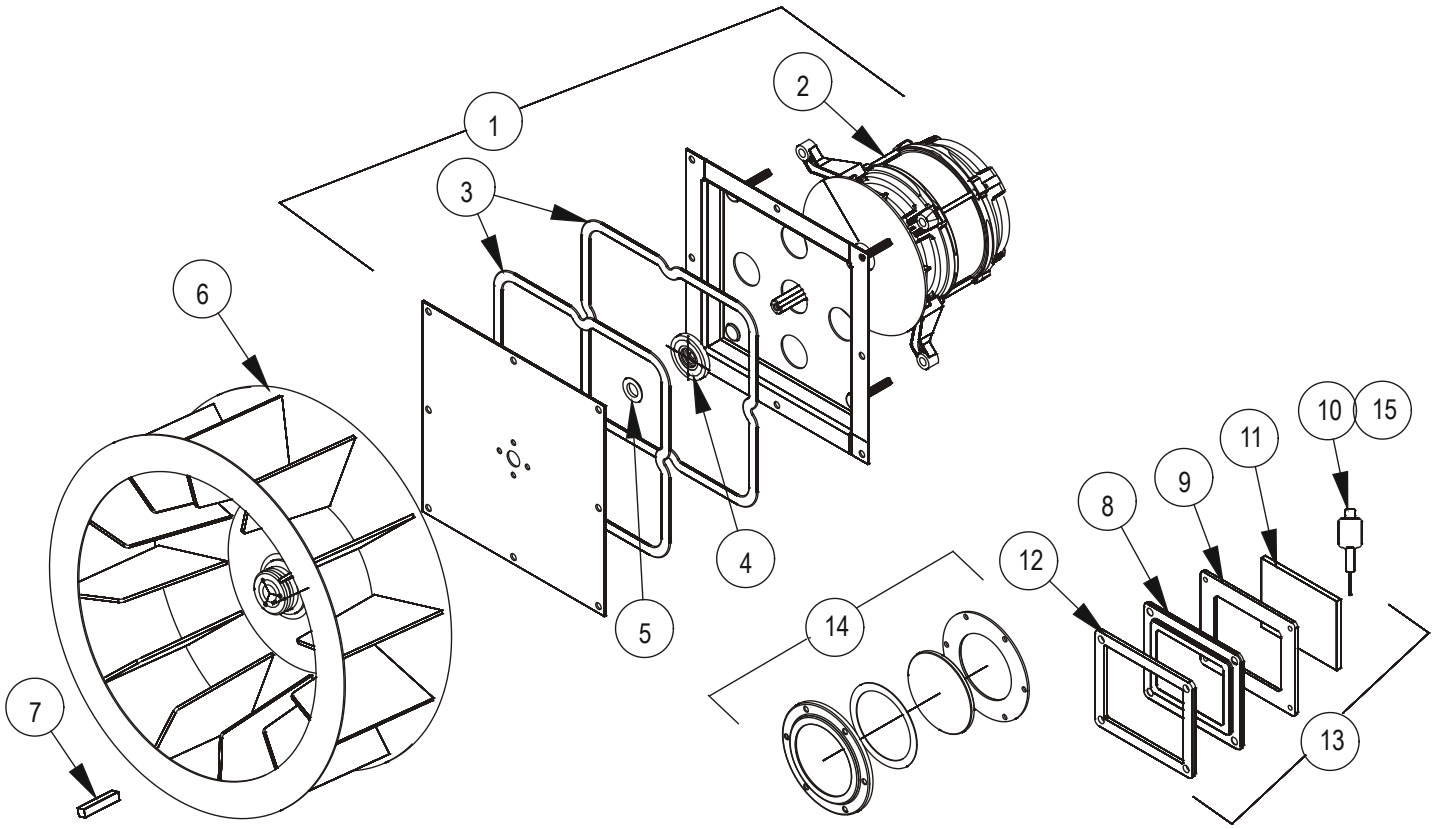

Ref. No.	Part No.	Description
1	39333	MOTOR & PANEL ASSEMBLY (INCLUDES ITEMS 2-5 & PANEL) BCX OR CNVX MODELS
	39333	MOTOR & PANEL ASSY (INCLUDES 2-5 & PANEL) BX MODELS BEFORE 11-8-13
	54293	MOTOR & PANEL ASSY (INCLUDES 2-5 & PANEL) BX MODELS AFTER 11-8-13
2	100345	BCX-14E MOTOR KIT, BEFORE 8/1/2017
	100344	BCX-14E MOTOR KIT, BETWEEN 8/1/2017-1/1/2019
	59909	BCX-14E MOTOR KIT, AFTER 1/1/2019
	100355	BCX-14G MOTOR KIT, BEFORE 8/1/2017
	59909	BCX-14G MOTOR KIT, AFTER 8/17/2017
3	56956	MOTOR MOUNT GASKET
4	R8955	SEAL RETAINER
5	R4244	SHAFT SEAL
6	52958	BLOWER WHEEL W/SHAFT KEY, BCX AND CNVX MODELS
	52958	BLOWER WHEEL W/SHAFT KEY, BX MODELS BEFORE 11-8-13
	55303	BLOWER WHEEL W/SHAFT KEY, BX MODELS AFTER 11-8-13

Ref. No.	Part No.	Description
7	54960	SHAFT KEY
8	D0125	LIGHT BEZEL (FOR SQUARE LIGHT DESIGN)
9	D0127	LIGHT GASKET (FOR SQUARE LIGHT DESIGN)
10	D0128	HALOGEN BULB (FOR SQUARE LIGHT DESIGN) TYPE G4 .16" BETWEEN PINS
	57075	HALOGEN BULB (FOR SQUARE LIGHT DESIGN) TYPE G5.3 .21" BETWEEN PINS
11	50192	LIGHT LENS (FOR SQUARE LIGHT DESIGN)
12	53070	OUTER LIGHT FRAME (FOR SQUARE LIGHT DESIGN)
13	52959	BULB REPLACEMENT KIT (INCLUDES ITEMS 8-12)
14	53081	LENS & GASKETS (FOR ROUND LIGHT DESIGN)
15	53101	HALOGEN BULB (FOR ROUND LIGHT DESIGN)
	57058	HOUSING, SOCKET, & BULB (FOR SQUARE LIGHT DESIGN)
	53194	HOUSING, SOCKET, & BULB (FOR ROUND LIGHT DESIGN)

LEGS & ACCESSORIES

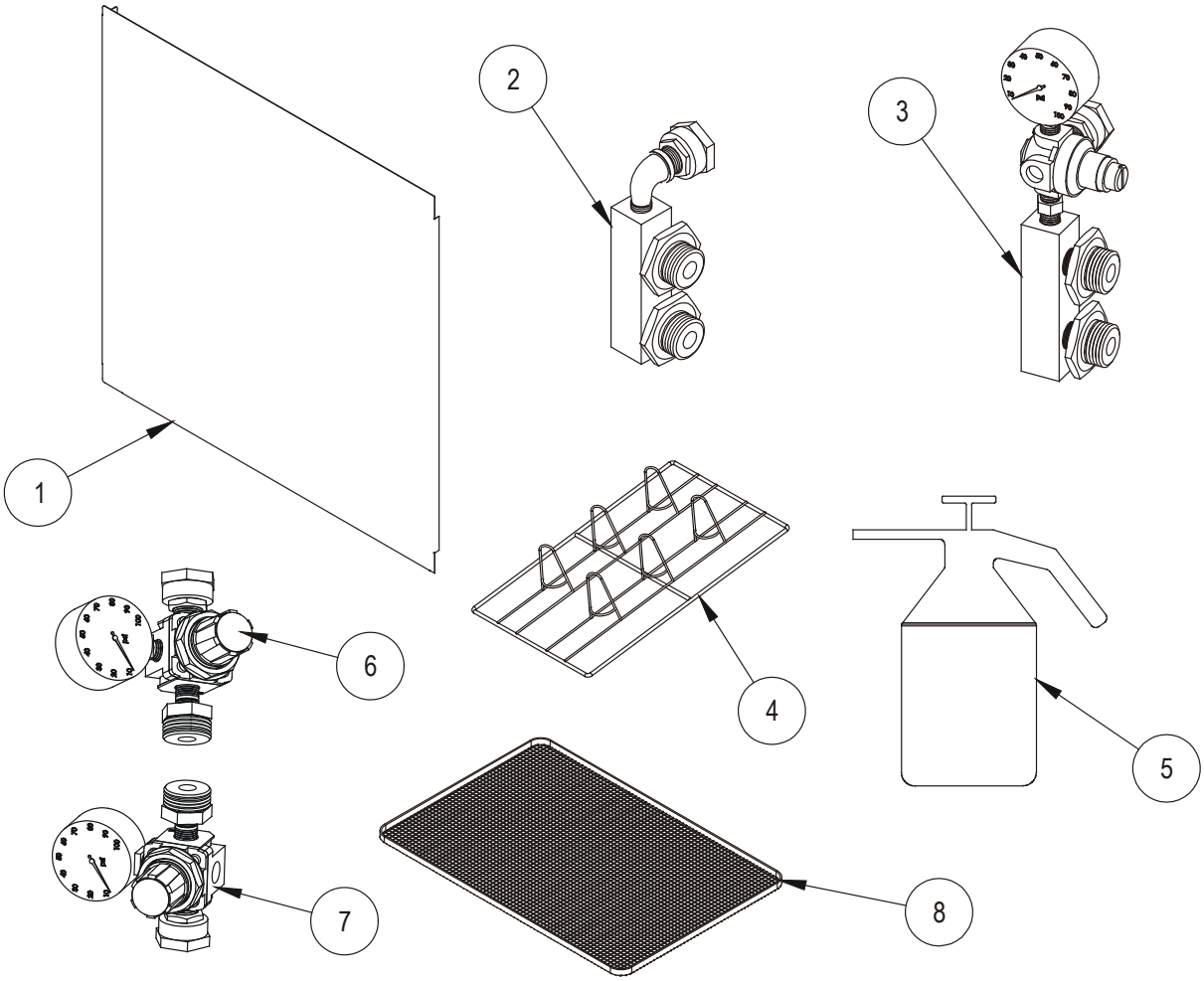

Ref. No.	Part No.	Description
1	54278	HEAT SHIELD KIT
2	50428	WATER MANIFOLD W/O REGULATOR
3	50425	WATER MANIFOLD W/REGULATOR
4	52387	CHICKEN ROASTING RACK
5	R10955	SPRAY BOTTLE
6	50429	PRESSURE REGULATOR (QUENCH OR SPRAY HOSE)
7	50435	PRESSURE REGULATOR (BOILER)
8	54247	MULTI-PURPOSE FRY RACK
	21242	GAS HOSE, 48"
	21826	GAS HOSE, 36"
	50299	KIT, GAS MANIFOLD STACKING
	39911	CORDSET, GAS MODELS
	R3109	4" S/S LEGS W/FEET (SET OF 4)
	8600	6" S/S LEGS W/FEET (SET OF 4)
	33196	6" SEISMIC LEGS (SET OF 4)
	8598	25" S/S LEGS W/FEET (SET OF 4)

Ref. No.	Part No.	Description
	R5455	FLOOR STAND FEET, BOLT ON STYLE (SET OF 4)
	R5454	FLOOR STAND CASTERS, BOLT ON STYLE (SET OF 4)
	R5456	FLOOR STAND SEISMIC FEET, BOLT ON STYLE (SET OF 4)
	R10899	EXTERNAL SPRAY HOSE WITH NOZZLE
	53919	KIT, DELIME BOTTLE
	R6308	CASTERS FOR DOUBLE STACK OVENS
	60780	FLOOR STAND CASTERS, PRESS=0N STYLE (SET OF 4)
	60779	FLOOR STAND FEET, PRESS IN STYLE (SET OF 4)
	57691	28" STAND WITH PAN SUPPORTS AND CASTERS
	57720	28" STAND WITH PAN SUPPORTS AND FEET
	57760	28" STAND WITH PAN SUPPORTS AND SEISMIC FEET