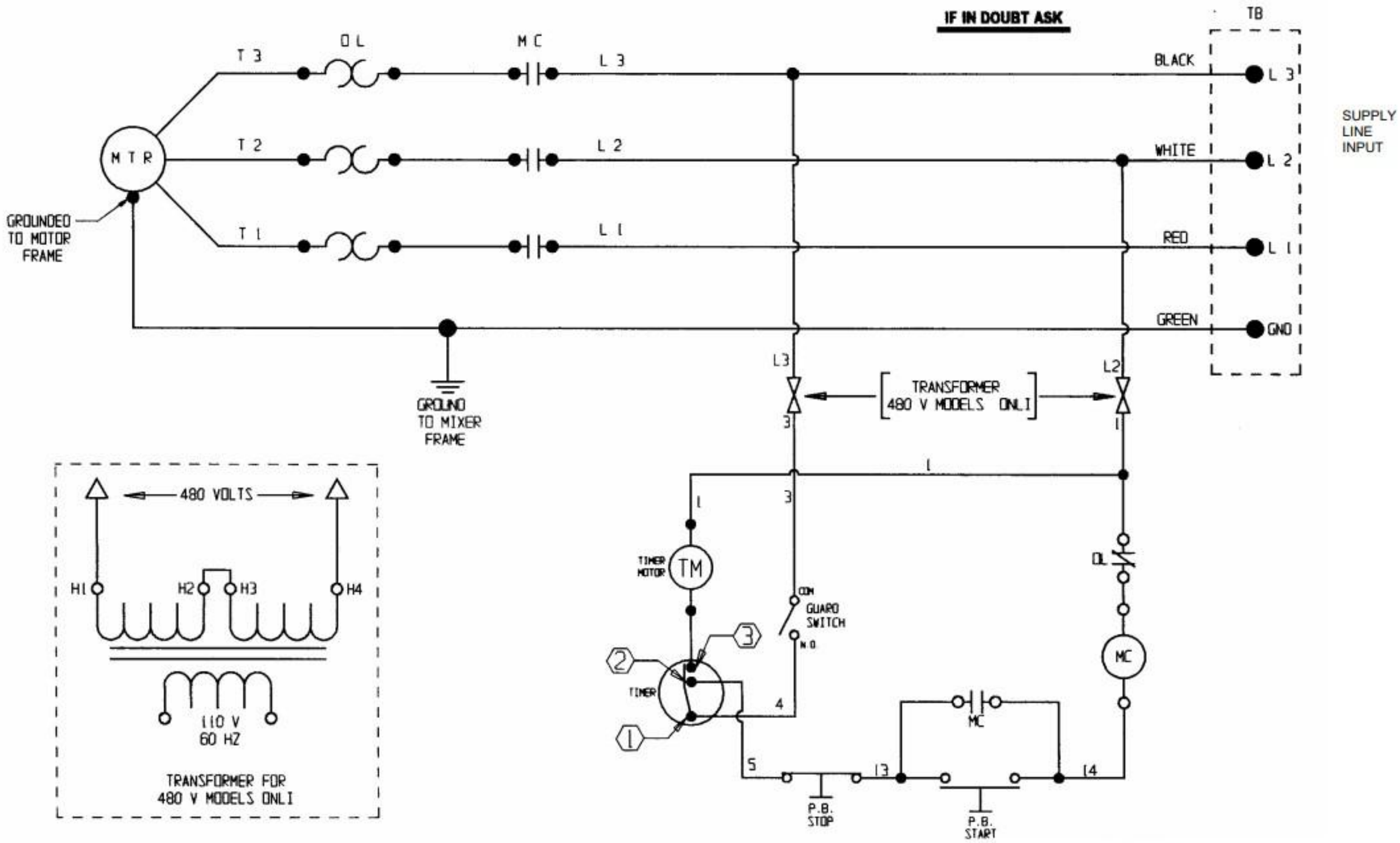

3 PHASE

NOTES:
EACH WIRE IDENTIFIED WITH A WIRE MARKER
= CONTROL DEVICE TERMINAL BLOCK

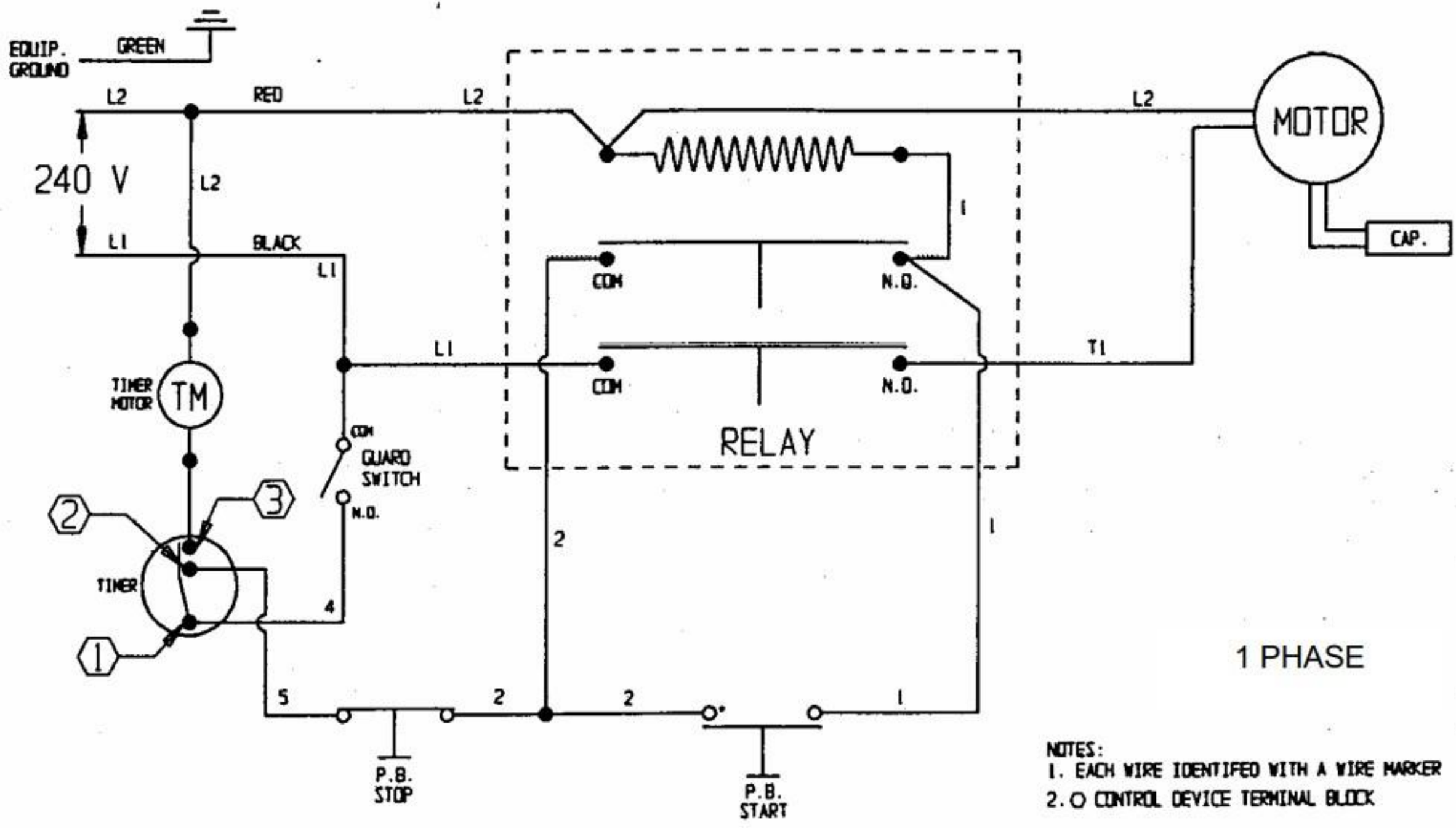
EQUIP. GROUND
GREEN
L2
RED
L2
L2
MOTOR
240 V
L2
L1
BLACK
L1
1
CAP.
COM
N.O.
L1
T1
TIMER MOTOR
TM
COM
N.O.
COM
QUARD SWITCH
N.O.
RELAY
2
3
2
1
TIMER
4
1
1 PHASE
5
2
2
1
P.B. STOP
P.B. START
NOTES:
1. EACH WIRE IDENTIFED WITH A WIRE MARKER
2. O CONTROL DEVICE TERMINAL BLOCK

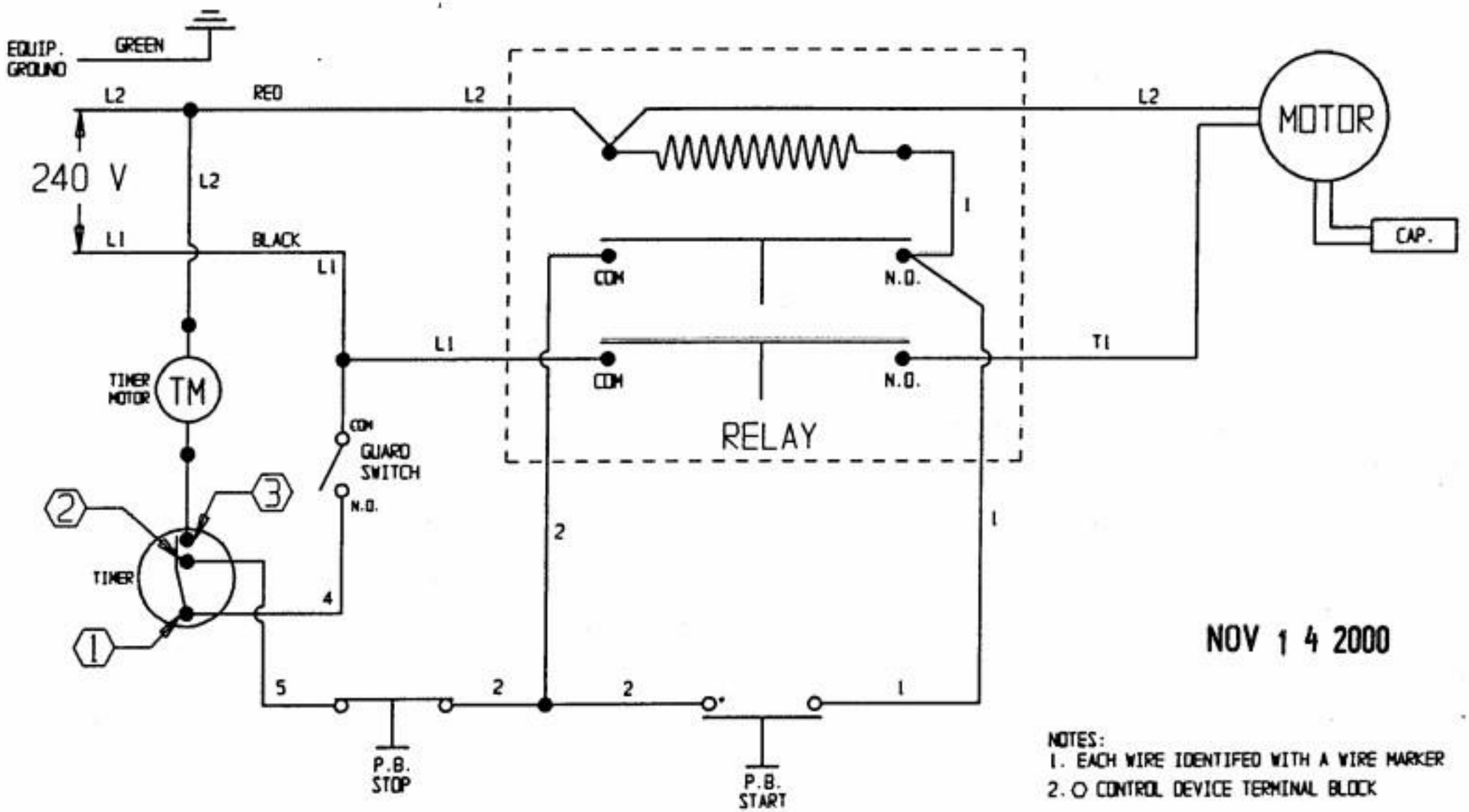

NOV 1 4 2000

NOTES:
1. EACH WIRE IDENTIFED WITH A WIRE MARKER
2. ○ CONTROL DEVICE TERMINAL BLOCK