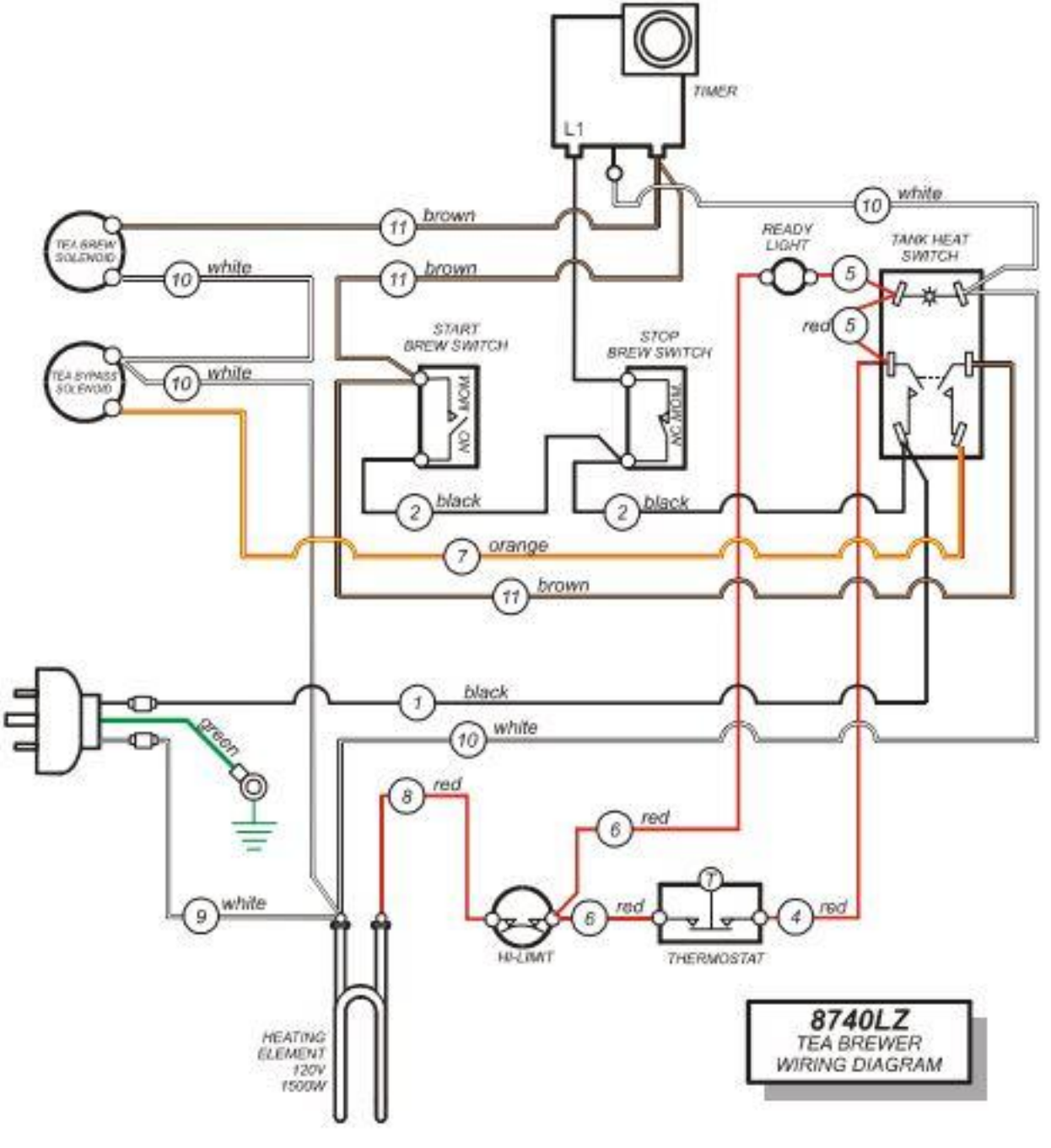
TIMER
L1
TEA BREW SOLENOID
TEA BYPASS SOLENOID
START BREW SWITCH
NO
NOM
ON
STOP BREW SWITCH
NC
NOM
ON
READY LIGHT
TANK HEAT SWITCH
HI-LIMIT
THERMOSTAT
HEATING ELEMENT 120V 1500W
brown
white
black
orange
red
green
8740LZ
TEA BREWER
WIRING DIAGRAM