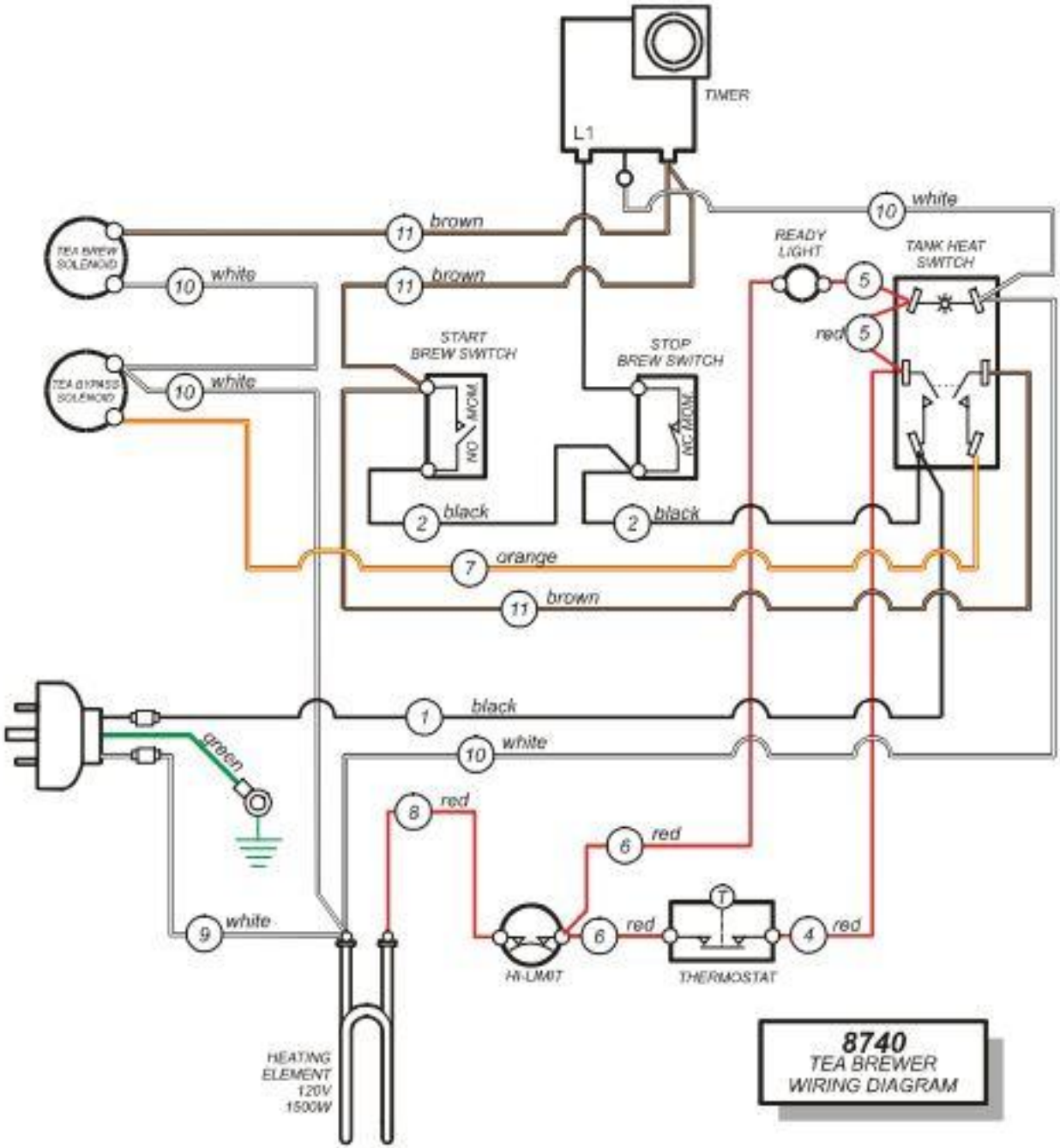
TIMER
L1
TEA BREW SOLENOID
TEA BYPASS SOLENOID
START BREW SWITCH
NO MOM
STOP BREW SWITCH
NC MOM
READY LIGHT
TANK HEAT SWITCH
HI-LIMIT
THERMOSTAT
HEATING ELEMENT 120V 1500W
brown
white
black
orange
green
red
8740
TEA BREWER
WIRING DIAGRAM