BLOOMFIELD

628

BLOOMFIELD INDUSTRIES
10 SUNNEN DRIVE
St. Louis, MO 63143
telephone: 314-781-2777
fax: 314-781-2714
www.wellsbloomfield.com

Model 8781A Brewer with optional 8799 3 gallon Iced Tea Dispenser

OWNERS MANUAL for

AUTOMATIC COFFEE / TEA BREWERS

MODEL:
8781A

Includes:

Installation
Operation
Use & Care
Servicing Instructions

WARRANTY STATEMENT

All electrical equipment manufactured by WELLS BLOOMFIELD, LLC is warranted against defects in materials and workmanship for a period of one year from the date of original installation or eighteen (18) months from the date of shipment from our factory, whichever comes first, and is for the benefit of the original purchaser, except that:

a. airpots carry a 30 day parts warranty only.
b. dispensers; i.e., tea and coffee carry a 90 days parts warranty only, excludes decanters.

THE FOREGOING OBLIGATION IS EXPRESSLY GIVEN IN LIEU OF ANY OTHER WARRANTIES, EXPRESSED OR IMPLIED, INCLUDING ANY IMPLIED WARRANTY OF MERCHANTABILITY OR FITNESS FOR A PARTICULAR PURPOSE, WHICH ARE HEREBY EXCLUDED.

WELLS BLOOMFIELD, LLC SHALL NOT BE LIABLE FOR INDIRECT, INCIDENTAL OR CONSEQUENTIAL DAMAGES OR LOSSES FROM ANY CAUSE WHATSOEVER.

This warranty is void if it is determined that upon inspection by an Authorized Service Agency that the equipment has been modified, misused, misapplied, improperly installed, or damaged in transit or by fire, flood or act of God.

It also does not apply if the serial nameplate has been removed or unauthorized service personnel perform service. The prices charged by Bloomfield Industries for its products are based upon the limitations in this warranty. Seller's obligation under this warranty is limited to the repair of defects without charge by a Bloomfield Authorized Service Agency or one of its sub-agencies. This service will be provided on customer's premises for non-portable models. Portable models (a device with a cord and plug) must be taken or shipped to the closest Authorized Service Agency, transportation charges prepaid, for services.

In addition to restrictions contained in this warranty, specific limitations are shown below (Additional Warranty Exclusions). Bloomfield Industries Authorized Service Agencies are located in principal cities.

This warranty is valid in the United States and void elsewhere. Please consult your classified telephone directory or your food service equipment dealer; or, for information and other details concerning warranty, write to:

Service Parts Department
Wells Bloomfield, LLC
P.O. Box 280
Verdi, NV 89439
Phone: (775) 689-5707 **Fax: (775) 689-5976**

SERVICE POLICY AND PROCEDURE GUIDE
ADDITIONAL WARRANTY EXCLUSIONS

1. Resetting of safety thermostats, circuit breakers, overload protectors, or fuse replacements unless warranted conditions are the cause.
2. All problems due to operation at voltages other than specified on equipment nameplates; conversion to correct voltage must be the customer's responsibility.
3. All problems due to electrical connections not made in accordance with electrical code requirements and wiring diagrams supplied with the equipment.
4. Replacement of items subject to normal wear, to include such items as knobs and light bulbs. Normal maintenance functions including adjustment of thermostats, microswitches, and replacement of fuses and indicating lights are not covered under warranty.
5. All problems due to inadequate water supply, such as fluctuating, or high or low water pressure.
6. All problems due to mineral/calcium deposits, or contamination from chlorides/chlorines. De-liming is considered a preventative maintenance function and is not covered by warranty.
7. Full use, care and maintenance instructions are supplied with each machine. Those miscellaneous adjustments noted are customer responsibility. Proper attention will prolong the life of the machine.
8. Travel mileage is limited to sixty (60) miles from an authorized Service Agency or one of its sub-agencies.
9. All labor shall be performed during normal working hours. Overtime premium shall be charged to the customer.
10. All genuine Bloomfield replacement parts are warranted for ninety (90) days from date of purchase on non-warranted equipment. **Any use of non-genuine Bloomfield parts completely voids any warranty**.
11. Installation, labor and job check-out are not considered warranty.
12. Charges incurred by delays, waiting time or operating restrictions that hinder the service technicians ability to perform services are not covered by warranty. This includes institutional and correctional facilities.

SHIPPING DAMAGE CLAIMS PROCEDURE

NOTE: For your protection, please note that equipment in this shipment was carefully inspected and packaged by skilled personnel before leaving the factory.
Upon acceptance of this shipment, the transportation company assumes full responsibility for its safe delivery.
IF SHIPMENT ARRIVES DAMAGED:

1. **VISIBLE LOSS OR DAMAGE:** Be certain that any visible loss or damage is noted on the freight bill or express receipt, and that the note of loss or damage is signed by the delivery person.
2. **FILE CLAIM FOR DAMAGE IMMEDIATELY:** Regardless of the extent of the damage.
3. **CONCEALED LOSS OR DAMAGE:** if damage is unnoticed until the merchandise is unpacked, notify the transportation company or carrier immediately, and file "CONCEALED DAMAGE" claim with them. This must be done within fifteen (15) days from the date the delivery was made to you. Be sure to retain the container for inspection.

Wells Bloomfield cannot assume liability for damage or loss incurred in transit. We will, however, at your request, supply you with the necessary documents to support your claim.

TABLE OF CONTENTS

WARRANTY STATEMENT	xi
SPECIFICATIONS	1
FEATURES & OPERATING CONTROLS	2
PRECAUTIONS & GENERAL INFORMATION	3
AGENCY LISTING INFORMATION	3
INSTALLATION INSTRUCTIONS	4
OPERATION	6
BREWING COFFEE	9
BREWING TEA	10
CLEANING INSTRUCTIONS	11
TROUBLESHOOTING SUGGESTIONS	12
SERVICING INSTRUCTIONS	14
Deliming Instructions	19
EXPLODED VIEW & PARTS LIST	20
SERVICE KITS	22
WIRING DIAGRAMS	23

Thank You for purchasing this Wells Bloomfield appliance.

Proper installation, professional operation and consistent maintenance of this appliance will ensure that it gives you the very best performance and a long, economical service life.

This manual contains the information needed to properly install this appliance, and to use, care for and maintain or repair the appliance in a manner which will ensure its optimum performance.

SPECIFICATIONS

MODEL	VOLTS 1ø	WATTS	AMPS 1ø	POWER SUPPLY CORD
8781A	120 VAC	1500 W	12.5 A	6' with NEMA 5-15P

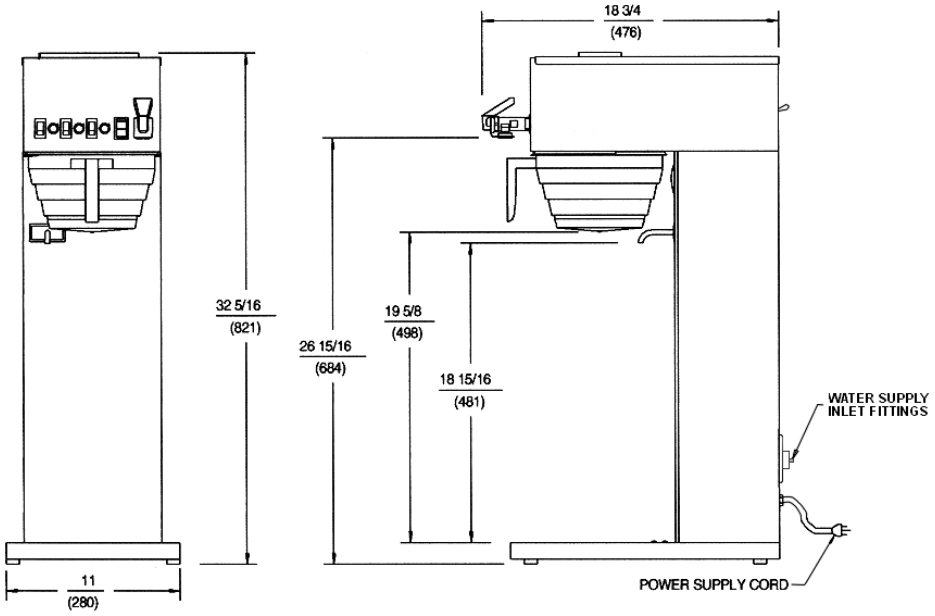

APPLICABILITY

This manual applies to the following Wells Bloomfield product:

8781A

FEATURES AND OPERATING CONTROLS

COFFEE / TEA BREWER
MODEL 8781A

POUR-OVER COVER
POUR-OVER OPENING
CONTROL PANEL
HOT WATER FAUCET
TIMER ACCESS
BREW CHAMBER
BYPASS NOZZLE
DISPENSER (IN BREW POSITION)
POWER CORD
ADJUSTABLE LEG
TANK HEATER SWITCH
WATER INLETS

BREW HEAD (BREW CHAMBER REMOVED)

BREW NOZZLE
SPRAY HEAD GASKET
SPRAY DISK
TIMER ACCESS
NAMEPLATE
BYPASS NOZZLE

CONTROL PANEL

BLOOMFIELD®

HOT
COFFEE
1 GAL
3 GAL
TEA VOLUME SELECTOR
TEA MODE SYSTEM
BREW SWITCH
COFFEE SYSTEM
STOP BREW
READY TO BREW
TEA

VOLUME SELECTOR SWITCH (IN "TEA" MODE)
"TEA" MODE INDICATOR LIGHT
START BREW SWITCH
"COFFEE" MODE INDICATOR LIGHT
STOP BREW SWITCH
WATER TEMPERATURE OK INDICATOR
"COFFEE" / "TEA" **MODE SELECTOR** SWITCH

PRECAUTIONS AND GENERAL INFORMATION

WARNING: ELECTRIC SHOCK HAZARD
All servicing requiring access to non-insulated components must be performed by qualified service personnel. Do not open any access panels which require the use of tools. Failure to heed this warning can result in electrical shock.

WARNING: INJURY HAZARD
All installation procedures must be performed by qualified personnel with full knowledge of all applicable electrical and plumbing codes. Failure could result in property damage and personal injury.

WARNING: ELECTRIC SHOCK HAZARD
Brewer must be properly grounded to prevent possible shock hazard. DO NOT assume a plumbing line will provide such a ground. Electrical shock will cause death or serious Injury.

WARNING: BURN HAZARD
This appliance dispenses very hot liquid. Serious bodily injury from scalding can occur from contact with dispensed liquids.

This appliance is intended for commercial use only.

This appliance is intended for use to brew beverage products for human consumption. No other use is recommended or authorized by the manufacturer or its agents.

This appliance is intended for use in commercial establishments, where all operators are familiar with the appliance use, limitations and associated hazards. Operating instructions and warnings must be read and understood by all operators and users.

Except as noted, this piece of equipment is made in the USA and has American sizes on hardware. All metric conversions are approximate and can vary in size.

The following trouble shooting, component views and parts lists are included for general reference, and are intended for use by qualified service personnel.

This manual should be considered a permanent part of this appliance. The manual must remain with the appliance if it is sold or moved to another location.

CAUTION: EQUIPMENT DAMAGE

DO NOT plug in or energize this appliance until all *Installation Instructions* are read and followed. Damage to the Brewer will occur if these instructions are not followed.

CAUTION: BURN HAZARD

Exposed surfaces of the appliance, brew chamber and decanter or dispenser may be HOT to the touch, and can cause serious burns.

AGENCY LISTING INFORMATION

This brewer is UL listed under UL file E9253.

This brewer meets NSF Standard 4 only when installed, operated and maintained in accordance with the enclosed instructions.

INSTALLATION

READ THIS CAREFULLY BEFORE STARTING THE INSTALLATION

IMPORTANT:
To enable the installer to make a quality installation and to minimize installation time, the following suggestions and tests should be done before the actual unit installation is started:

CAUTION:
EQUIPMENT DAMAGE

DO NOT plug in or energize this appliance until all Installation Instructions are read and followed. Damage to the Brewer will occur if these instructions are not followed.

CAUTION:
UNSTABLE EQUIPMENT HAZARD

It is very important for safety and for proper operation that the brewer is level and stable when standing in its final operating position. Provided adjustable, non-skid legs must be installed at each corner of the unit. Failure to do so will result in movement of the brewer which can cause personal Injury and/ or damage to brewer.

NOTE: Water supply inlet line must meet certain minimum criteria to insure successful operation of the brewer. Bloomfield recommends 1/4" copper tubing for installation of less than 12 feet and 3/8" for more than 12 feet from a 1/2" water supply line.

Unpack the unit. Inspect all components for completeness and condition. Ensure that all packing materials have been removed from the unit.

Verify that the Spray Head Gasket and Spray Disk are properly installed.

LEVELING THE UNIT

Verify that an adjustable leg is installed at each corner of the brewer, and that a rubber foot is installed on each leg.

Set Brewer in its operating location. Level the Brewer. A spirit level should be placed on the top of the unit, at the edge, as a guide when making level adjustments.

Level the unit from left to right and front to back by turning the adjustable feet. Be sure all four feet touch the counter to prevent tipping.

PLUMBER'S INSTALLATION INSTRUCTIONS

Brewer should be connected to a **POTABLE WATER, COLD WATER** line. Flush water line before connecting to Brewer.

DO NOT use a saddle valve with a self-piercing tap for the water line connection. Such a tap can become restricted by waterline debris. For systems that must use a saddle tap, shut off the main water supply and drill a 3/16" (minimum) tap for the saddle connection, in order to insure an ample water supply. Remember to flush the line prior to installing the saddle.

The brewer must be installed on a water line with average pressure between 20 PSI and 90 PSI. If your water pressure exceeds 90 PSI at anytime, a pressure regulator must be installed in the water supply line to limit the pressure to not more than 90 PSI in order to avoid damage to lines and solenoid.

A water shut-off valve should be installed on the incoming water line in a convenient location (Use a low restriction type valve, such as a 1/4-turn ball valve, to avoid loss of water flow thru the valve.

NSF requires that the brewer be able to be moved for cleaning underneath. Loops of copper tubing will satisfy this requirement. See Figure 2 below.

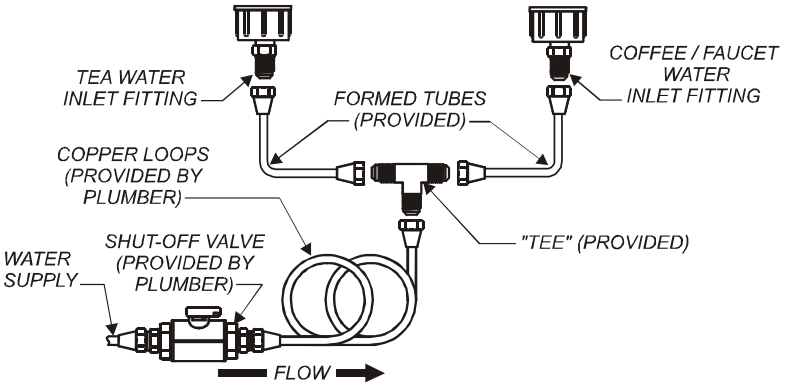

Fig. 2 Water Supply Installation

In some areas, local codes require a backflow preventer (check valve) to be installed on the inlet water line. If a backflow preventer is used, you must install a *water hammer arrester* in the incoming line, between the backflow preventer and the brewer inlet, as far away from the brewer as space will allow. This will relieve the excessive back pressures that can cause faucet leaks and solenoid malfunctions.

ELECTRICIAN'S INSTALLATION INSTRUCTIONS

REFER TO ELECTRICAL SPECIFICATIONS - Page 1
Check the nameplate to determine correct electrical service required for the brewer to be installed.

IMPORTANT: Before connecting to electricity, make sure brewer is connected to the water supply.

Model 8781A is equipped with a cord and plug. It requires a 115 - 125 volt 20 amp circuit (50/60 Hz, 2 wire plus ground, with NEMA 5-15R or 5-20R Receptacle).

NOTE: This equipment must be installed to comply with all applicable federal, state and local plumbing codes and ordinances.

WARNING: SHOCK HAZARD

Brewer must be properly grounded to prevent possible shock hazard. DO NOT assume a plumbing line will provide such a ground. Electrical shock will cause death or serious injury.

IMPORTANT:
Supply power must match nameplate for voltage and phase. Connecting to the wrong voltage will damage the brewer or result in decreased performance. Such damage is not covered by warranty.

IMPORTANT: Do not connect brewer to electrical power until you are ready to fill the tank. See instructions at left.

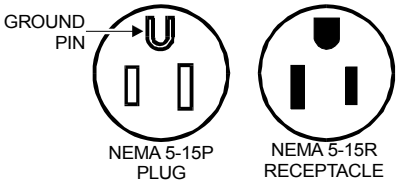

IMPORTANT: The ground prong of the plug is part of a system designed to protect you from electrical shock in the event of internal damage. Never cut off the ground prong nor twist a blade to fit an existing receptacle. Contact a licensed electrician to install the proper circuit and receptacle.

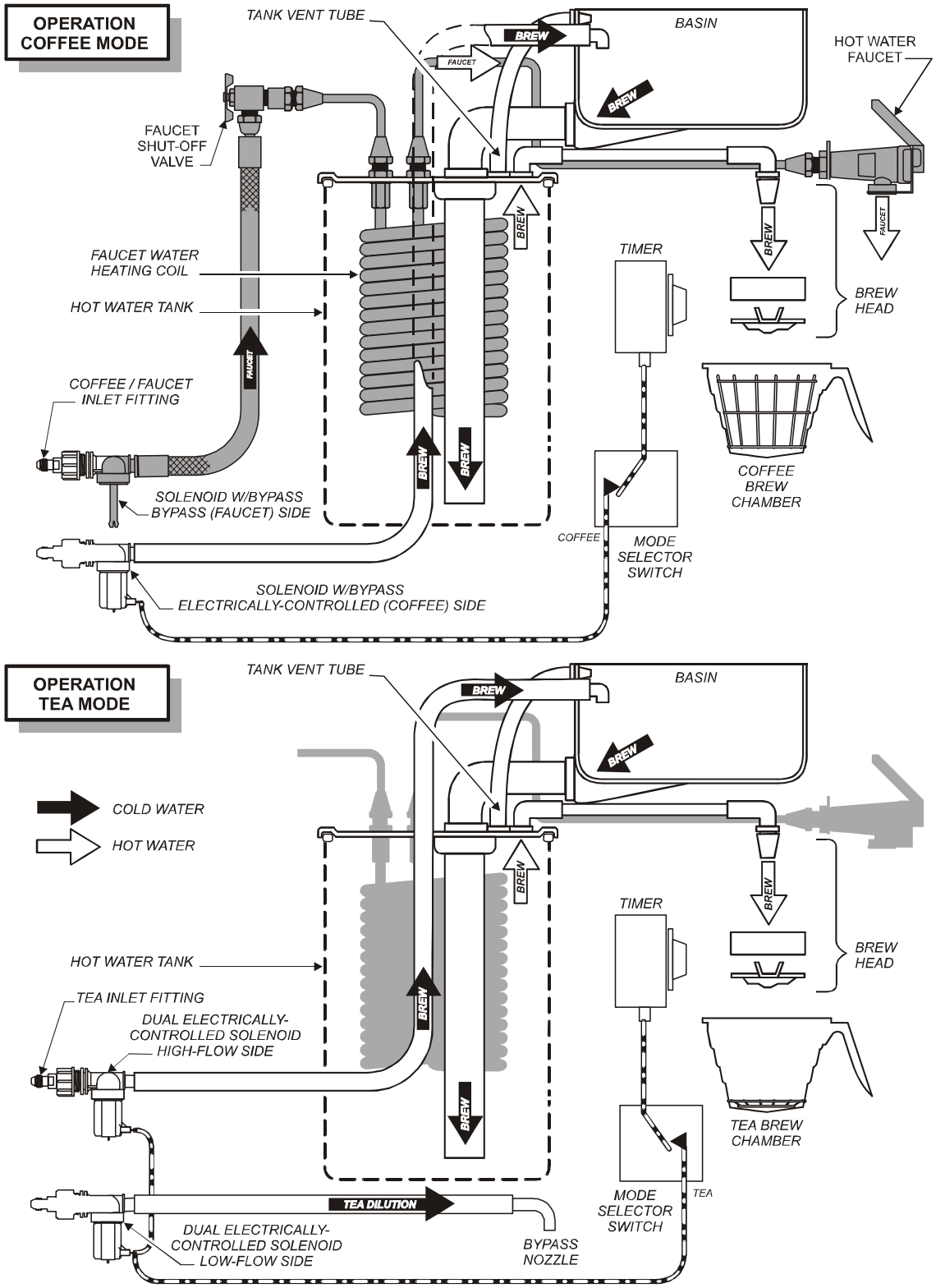

Fig. 3 Brewer Operation Diagram

A. START-UP

For initial start-up, or if the brewer has not been used for an extended period of time:

- ♦ Be sure spray disk and brew gasket are properly installed in the brew head.
- ♦ Be sure the water supply is properly connected and the water supply valve is turned *ON*.
- ♦ Be sure the WATER TANK IS FILLED.

IMPORTANT: Fill the water tank before energizing this unit:

1. Insert the "COFFEE" brew chamber (empty) and place an empty container in place under the brew chamber.
2. Be sure the TANK HEATER SWITCH on back of brewer "***OFF***".
3. Plug the unit into an appropriate receptacle.
4. Press COFFEE/TEA switch to "COFFEE". Press BREW SWITCH. Water will begin filling the tank. When the water fill stops, press the switch again. Repeat until water flows from the brew chamber. This will usually require running three (3) cycles.
5. When water starts to flow from the brew chamber, tank is full. When all dripping has stopped, discard all water in container.
6. Turn TANK HEAT SWITCH "***ON***". The heating elements will begin heating the water in the tank. When the water has reached the proper temperature, the "*READY TO BREW"* light will glow.

IMPORTANT:
Tank must be full of water before tank heater switch "***ON***". Heating element will be damaged if allowed to operate without being fully submerged in water. Damage caused by operating the brewer without water in the tank is *NOT COVERED BY WARRANTY*.

NOTE:
After tank is filled, turn the tank heater switch "on". Brewer will require approximately 18 minutes to heat water to operating temperature.

B. OPERATIONAL NOTES

1. COFFEE
   a. When brewing coffee, be sure to use the "coffee" brew chamber (uses the tall rack, and does *not* state "tea only" on the outside of the shell).
   b. Press the COFFEE/TEA switch to "*COFFEE*".
   c. COFFEE MODE will brew 64 oz. of coffee.
   d. Use a standard 64 oz. decanter.
2. TEA
   a. When brewing tea, be sure to use the "tea" brew chamber (uses the short rack, and states "tea only" on the outside of the shell).
   b. Press the COFFEE/TEA switch to "*TEA*".
   c. Select either "1 gallon" or "3 gallon brew".
   d. Use a dispenser of the appropriate size. Be sure dispenser is positioned so that water from the BYPASS NOZZLE flows into the dispenser.

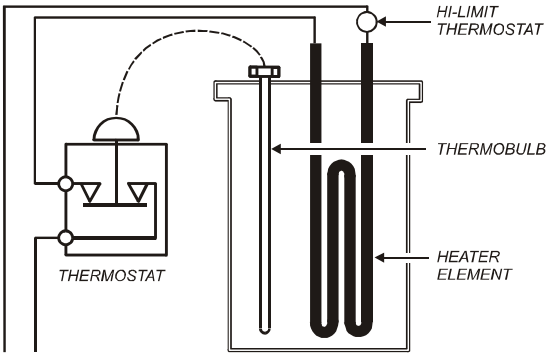

Fig. 4 Heat Control Diagram

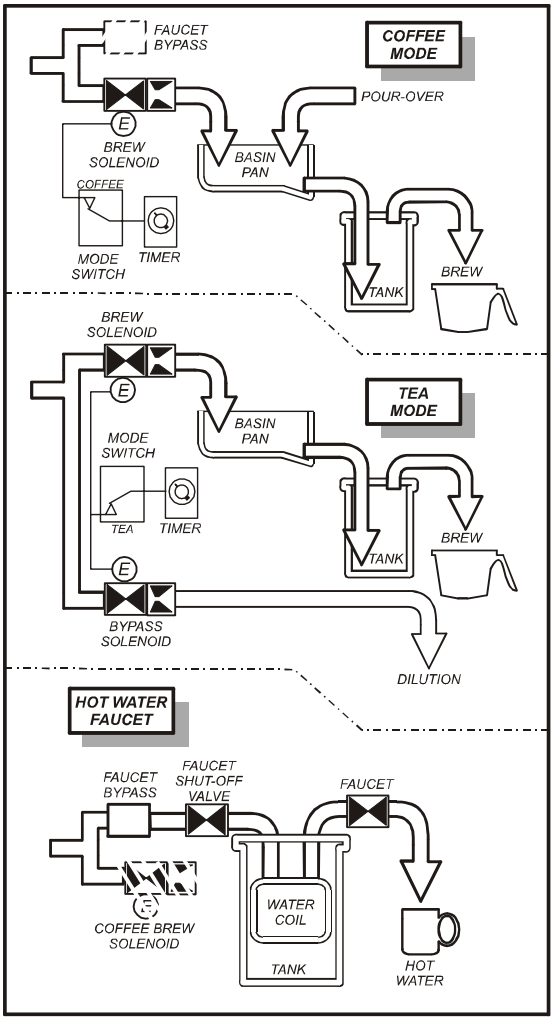

Fig. 5 Water Flow Diagram

WATER HEATER

Water temperature is sensed by a thermobulb inserted into the water tank. This temperature signal is fed to the mechanical thermostat.

The setpoint temperature is adjustable. Heating element is energized by the thermostat.

Excessive temperature will trip the hi-limit safety switch. The hi-limit will automatically reset when the brewer cools.

WATER FLOW

AUTOMATIC OPERATION

In COFFEE mode, pressing the BREW switch causes the timer to energize the coffee brew solenoid valve. This allows water from an external water supply to flow into the water tank.

In TEA mode, pressing the BREW switch causes the timer to energize the tea brew solenoid valve. This allows water from an external water supply to flow into the water tank. Additionally, the tea bypass solenoid is energized, sending cold dilution water from an external source to the dispenser.

Water flowing into the tank forces a like amount of heated water out of the tank to perform the brew.

POUR-OVER OPTION

If an external water source is unavailable, one decanter of cold water may be poured into the pour-over opening to brew coffee. Pour-over is not recommended for brewing tea.

AUTOMATIC OPERATION TIMER

The length of time a brew or bypass solenoid is open is controlled by the timer. The timer signal is routed to either the coffee brew solenoid, or to the tea brew and bypass solenoids, according to the position of the mode switch.

HOT WATER FAUCET

The faucet water coil is submerged in the hot water tank and draws heat from the brew water. Water going to the water coil is not controlled by either brew solenoid valve.

Hot water is provided at the faucet, at supply water pressure, any time the faucet shut-off valve is *OPEN*.

A. PREPARATION

Examine the coffee brew chamber to verify that the tall the wire rack is in place.

Place one (1) genuine Bloomfield paper filter into the wire rack in the coffee brew chamber.

Add a pre-measured amount of fresh coffee grounds.

Gently shake the brew chamber to level the bed of grounds.

Slide the brew chamber into place under the brew head.

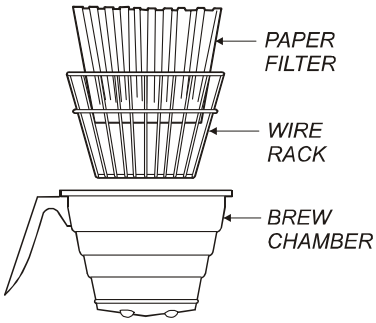

Fig. 6 Coffee Brew Chamber

B. AUTOMATIC OPERATION

BE sure “READY TO BREW” light is lit.

Place the appropriate *EMPTY* decanter in place under the brew chamber.

Press the "COFFEE/TEA" switch to "*COFFEE*".

Press the “BREW” switch. The coffee brew solenoid will open for an amount of time determined by the timer setting, admitting a measured quantity of water into the tank.

Inlet water will displace a like amount of heated water from the tank. The hot water will be forced into the brew head where it will spray over the bed of grounds. Freshly brewed coffee will begin to fill the decanter under the brew chamber.

When the flow and all dripping stops at the end of the brew cycle, the coffee is ready to serve.

Discard the contents of the brew chamber and rinse it in a sink. When the ”READY TO BREW” light glows, the brewer is ready for another brew cycle.

CAUTION: BURN HAZARD

Exposed surfaces of the brewer, brew chamber and decanter may be HOT to the touch, and can cause serious burns.

CAUTION: BURN HAZARD

To avoid splashing or overflowing hot liquids, ALWAYS place an empty airpot under the brew chamber before starting the brew cycle. Failure to comply can cause serious burns.

CAUTION: BURN HAZARD

After a brew cycle, brew chamber contents are HOT. Remove the brew chamber and dispose of used grounds with care. Failure to comply can cause serious burns.

NOTE: Water for the hot water faucet is heated in a coil inside of the water tank. Use of the faucet will not affect the volume of water delivered for a brew. However, overuse of the faucet during a brew may lower the temperature of the brew water.

BREWING TEA

CAUTION:
BURN HAZARD

Exposed surfaces of the brewer, brew chamber and decanter may be HOT to the touch, and can cause serious burns.

CAUTION:
BURN HAZARD

To avoid splashing or overflowing hot liquids, ALWAYS place an empty dispenser under the brew chamber before starting the brew cycle. Failure to comply can cause serious burns.

CAUTION:
BURN HAZARD

After a brew cycle, brew chamber contents are HOT. Remove the brew chamber and dispose of used grounds with care. Failure to comply can cause serious burns.

NOTE: Water for the hot water faucet is heated in a coil inside of the water tank. Use of the faucet will not affect the volume of water delivered for a brew. However, overuse of the faucet during a brew may lower the temperature of the brew water.

A. PREPARATION

Examine the tea brew chamber to verify that the short the wire rack is in place.

Place one (1) genuine Bloomfield paper filter into the wire rack in the tea brew chamber.

Add an amount of fresh tea leaves to the brew chamber appropriate to the desired 1 gallon or 3 gallon brew volume.

Gently shake the brew chamber to level the bed of tea leaves.

Slide the brew chamber into place under the brew head.

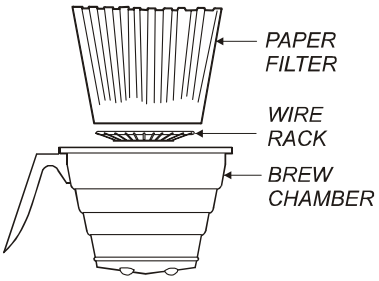

Fig. 7 Tea Brew Chamber

B. AUTOMATIC OPERATION

BE sure “READY TO BREW” light is lit.

Place the appropriate *EMPTY* dispenser in place under the brew chamber. If a brew-thru lid is used, be sure the bypass opening in the lid is directly under the bypass nozzle.

Press the "COFFEE/TEA" switch to "*TEA*".

Press the "TEA VOLUME SELECTOR" switch to either "*1 GAL*" or "*3GAL*" position as desired

Press the “BREW” switch. The coffee brew solenoid will open for an amount of time determined by the timer setting, admitting a measured quantity of water into the tank.

Inlet water will displace a like amount of heated water from the tank. The hot water will be forced into the brew head where it will spray over the bed of grounds. Freshly brewed coffee will begin to fill the dispenser. Additionally, a measured amount of cold dilution water will flow from the bypass nozzle into the dispenser.

When the flow and all dripping stops at the end of the brew cycle, the tea is ready to serve.

Discard the contents of the brew chamber and rinse it in a sink. When the ”READY TO BREW” light glows, the brewer is ready for another brew cycle.

PROCEDURE: Clean Coffee/Tea Brewer

PRECAUTIONS: Disconnect brewer from electric power.
Allow brewer to cool.

FREQUENCY: Daily

TOOLS: Mild Detergent, Clean Soft Cloth or Sponge
Bristle Brush, Bottle Brush

1. Disconnect brewer from electric power.
   Allow brewer to cool before cleaning.
2. Remove decanter or dispenser.
3. Remove and empty brew chamber.
4. Remove the spray disk from the brew head (See figure 8): Press up on the spray disk ears, then turn the disk to the left to unlatch. Remove the gasket from inside the brew head.
5. Wipe inside of brew head and area around the brew head with a soft clean cloth or sponge moistened with clean water.
6. Wash the spray disk in a sink using warm water and a mild detergent. A bristle brush may be used to clear clogged spray holes. Rinse the spray disk with clean water and allow to air dry.
7. Wash the brew chamber in a sink using warm water and a mild detergent. A bristle brush may be used to clean the inside. Rinse with clean water and allow to air dry.
8. Wipe the exterior of the brewer with a soft clean cloth or sponge moistened with clean water.
10. Reinstall the gasket *INSIDE* the brew head, then reinstall the spray disk.
11. Be sure the wire rack is in place in the brew chamber, then reinstall the brew chamber.
12. Clean decanters and dispensers by filling with warm soapy water. Scrub the inside of decanters with a bottle brush. Empty and rinse with clean water. Wipe the exterior with a soft clean cloth or sponge moistened with clean water. Invert and allow to air dry.

Procedure is complete

CAUTION:
BURN HAZARD

Brewing and serving temperatures of coffee are extremely hot.
Hot coffee will cause serious skin burns.

CAUTION:
SHOCK HAZARD

Do not submerge or immerse brewer in water.

IMPORTANT:
DO NOT use steel wool, sharp objects, or caustic, abrasive or chlorinated cleansers to clean the brewer, decanters or dispensers.

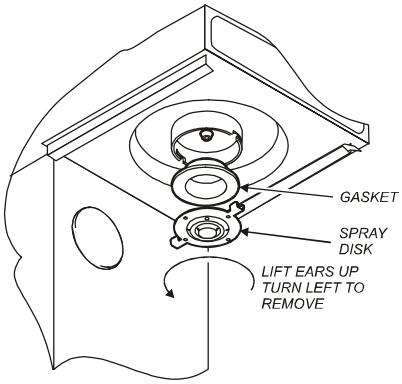

Fig. 8 Cleaning

TROUBLESHOOTING SUGGESTIONS

SYMPTOM	POSSIBLE CAUSE	SUGGESTED REMEDY
Water won't heat	Brewer unplugged or circuit breaker tripped	Check power supply cord Check / reset circuit breaker
	Temperature setpoint too low	Set for desired temperature
	Hi-Limit safety switch tripped	Allow to cool hi-limit will self-reset
	Damaged internal component or wiring	Examine wiring & connectors, thermostat and heating element Repair/replace as needed
Coffee level too high or low	Timer out of adjustment	Adjust timer
Coffee level (only) too low	Plugged coffee solenoid strainer	Clean strainer
Tea level too high or low	Proper volume not selected	Set tea volume selector switch to desired volume
Tea level (only) too low	Plugged tea solenoid strainer	Clean strainer
	"TEA" not selected	Press COFFEE/TEA switch to "*TEA*"
Brew chamber overflows	Too many filter papers or wrong filter paper	Use one (1) genuine Bloomfield filter per brew
	Brew chamber dispense hole plugged	Thoroughly clean brew chamber
	Wire rack not in place	Install proper wire rack
	Too much coffee or too fine a grind	Use correct grind and amount of coffee
Sprays water from brew head	Spray gasket improperly installed	Check/reinstall gasket on INSIDE of brew head
	Spray disk plugged	Clean spray disk
No brew (faucet flows OK)	Damaged internal component or wiring	Check brew switch, wiring & solenoid. Repair, replace as needed
No dilution flow from bypass nozzle	"TEA" not selected	Press COFFEE/TEA switch to "*TEA*"
	Damaged internal component or wiring	Check wiring & tea bypass solenoid. Repair, replace as needed
No brew plus no flow from hot water faucet	Water supply OFF	Turn water supply ON
	Water filter (if used) plugged	Replace filter element
No flow from hot water faucet	Faucet valve turned OFF	Turn faucet valve ON
	Faucet plugged	Disassemble faucet, clean

TROUBLESHOOTING SUGGESTIONS

SYMPTOM	SUGGESTED REMEDY
Poor coffee quality	Keep brewer, brew chamber and decanters clean.
	Install a taste and odor filter in water supply, and replace cartridges regularly.
	Use a quality coffee with a consistent roast. Use proper grind and amount of coffee per brew. Freshly ground coffee beans make the best coffee beverage.
	Be sure to use the *coffee* brew chamber with the tall wire rack.
Poor tea quality	Keep brewer, brew chamber and dispenser clean.
	Install a taste and odor filter in water supply, and replace cartridges regularly.
	Use a quality tea. Use proper amount of tea leaves per brew for the selected brew volume.
	Be sure to use the *tea* brew chamber with the short wire rack.

CAUTION:
SHOCK HAZARD

Opening access panels on this brew may expose uninsulated electrical components. Disconnect brewer from electrical power before removing any panel.

ACCESS PANELS

TOP PANEL:

Remove top panel to access hot water tank, thermostat, heating element, brew circuit tubing, faucet valve and piping, and switches.

Top panel is held by two screws at the rear and a retaining lip at the front.

FRONT PANEL:

Remove front panel to access timer, wiring and bypass nozzle plumbing connections.

Front panel is held by two screws at the bottom and a retaining lip at the top.

SOLENOID DOOR:

Remove solenoid door to access solenoid plumbing and electrical connections.

Solenoid door is held by two screws and a retaining lip.

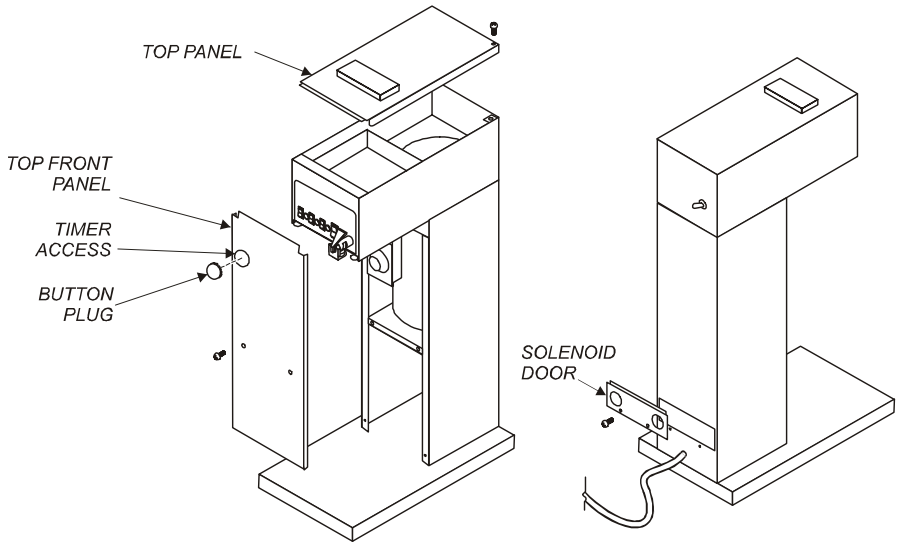

Fig. 9 Access Panels

TEMPERATURE ADJUSTMENT

Unplug power cord or turn circuit breaker OFF. Remove top panel.

Pull vent tube out of tank lid and insert a thermometer of known accuracy in hole. Reconnect brewer to electrical power. Place empty container under brew chamber. Energize brewer and allow unit to heat. When the READY TO BREW light first glows, read the temperature displayed on thermometer.

Adjust thermostat by turning shaft; clockwise increases temperature. 1/8 turn = approximately 10ºF, or 5.6ºC. Refer to Table 1 below for proper brewing temperature based on altitude.

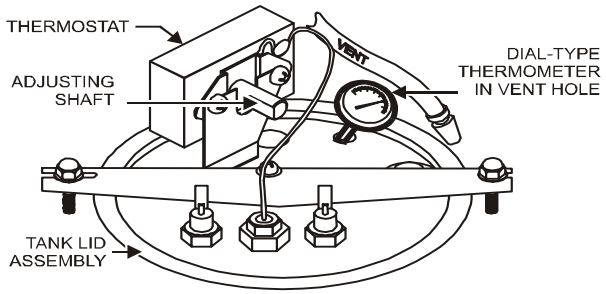

Fig. 10 Checking and Adjusting Brew Temperature

Upon completion, remove thermometer and reinstall the vent line and top panel.

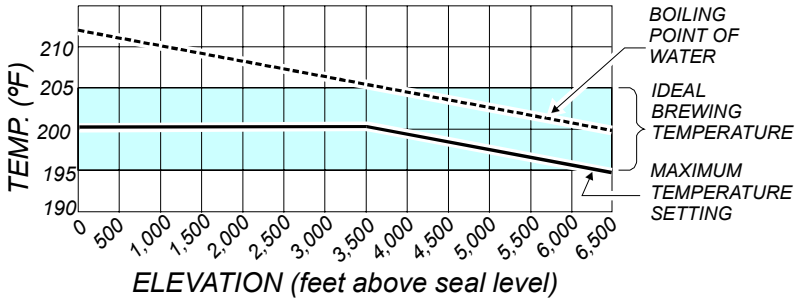

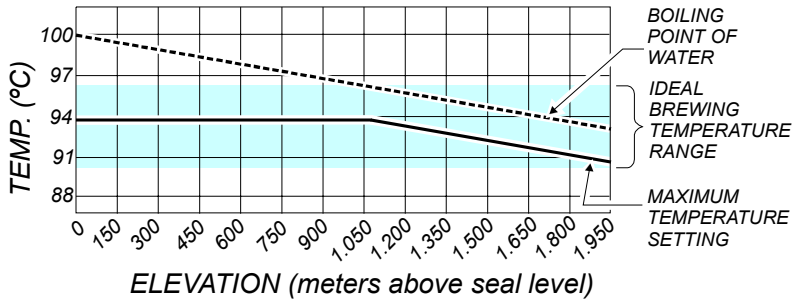

Table 1 Boiling Temperature by Altitude

CAUTION: SHOCK HAZARD

These procedures involve exposed electrical circuits. These procedures are to be performed by qualified technical personnel only.

NOTE: Optimum brewing temperature is 195ºF to 205ºF (90ºC to 96ºC).
Thermostat should be adjusted to a maximum temperature of 200ºF (95ºC).

IMPORTANT:
A mechanical thermostatwill maintain temperature within ±5ºF.
To prevent boiling water in the brewer, controller should be adjusted to a maximum temperature equal to the local boiling temperature minus 5ºF, or 200ºF (94ºC), whichever is less.
NOTE: 1/8 turn = approximately

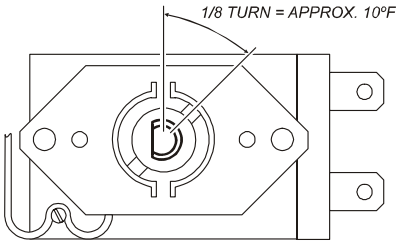

10ºF (5.6ºC).

Fig. 11 Adjust Thermostat

IMPORTANT: Water pressure must be between 20 p.s.i and 90 p.s.i. flowing pressure. If water pressure exceeds this value, or if water pressure varies greatly, a pressure regulator must be installed in the water supply line.

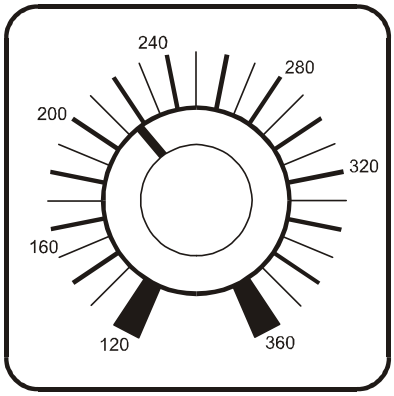

Fig. 12 Adjust Solenoid Time

IMPORTANT: Before setting assembly into tank, make sure tank lid gasket is properly seated on flange of lid.

IMPORTANT:
If mounting thermostat p/n 8512-51, be sure to place a new seal washer below the fitting on the capillary line.

If replacing gray-bodied thermo with p/n 8512-51, be sure to remove tube from thermowell.

IMPORTANT: When replacing heating element, also replace seal gaskets.

SOLENOID TIME ADJUSTMENT

The amount of water dispensed automatically during a brew cycle is controlled by the timer. This adjustment must be performed in the *COFFEE* mode.

Place empty decanter under brew chamber. Press BREW switch. Brewer should dispense one full decanter of water. To adjust amount:

Remove brew chamber and button plug. Adjust timer; clockwise increases time. Run several cycles to check amount of water delivered. Replace button plug.

REMOVE TANK LID ASSEMBLY

Unplug brewer or turn circuit breaker *OFF*. Turn *OFF* water supply. Remove top panel.

Disconnect brew fill and outlet tubes from tank lid fittings.

Disconnect faucet supply and outlet tubes from flare fittings on tank lid.

Disconnect all wiring from thermostat, hi-limit and heating element.

Loosen center screw on tank hold-down bracket. Remove hold-down bracket by sliding short slotted end off of locking stud and lifting it off. Remove cover assembly by lifting it straight up. Reassemble in reverse order.

REPLACE THERMOSTAT

Unplug brewer or turn circuit breaker *OFF*. Turn *OFF* water supply. Remove top panel.

Disconnect all wiring from thermostat only. Loosen and free jam nut from pass-thru fitting securing temperature sensing bulb. Remove two screws holding thermostat to bracket.

Lift out thermostat, sensing bulb and thermostat gasket.

Push sensing bulb into tank lid thermowell until fitting seats. Tighten capillary lock nut only enough to ensure no water leakage. Excessive tightening is not necessary.

Reassemble in reverse order.

REPLACE HEATING ELEMENT

Remove tank lid assembly per above.

Remove two hex nuts holding element to cover. Pull element from mounting holes.

Reassemble in reverse order.

REPLACE SOLENOID

Symptom: Automatic brewer will not flow water; or, automatic brewer drips continuously from brew head.

NOTE: Wrench p/n 86660 is designed to allow easy removal of the hoses from the plastic solenoid valve.

IMPORTANT: Shut-off water and electric supply to brewer before removing hoses or wiring.

Remove water supply flare fitting:

a. Slide the 5/8" end of the wrench over the flats on the inlet fitting of the valve.
b. Hold the wrench to prevent the inlet fitting from turning while installing or removing the inlet water supply flare nut.

Remove braided hose:

a. Slide the 7/16" end of the wrench between the valve body and the white ring on the extreme end of the metal hose fitting.
b. Pressure on the white ring toward the metal ferrule releases the clinch ring, allowing the hose to be easily slid off of the solenoid bypass outlet.
c. Install hose on new valve by pressing end of hose onto bypass outlet until it is fully seated.

Disconnect wiring.

Remove two screws holding solenoid to access door.

Reassemble in reverse order.

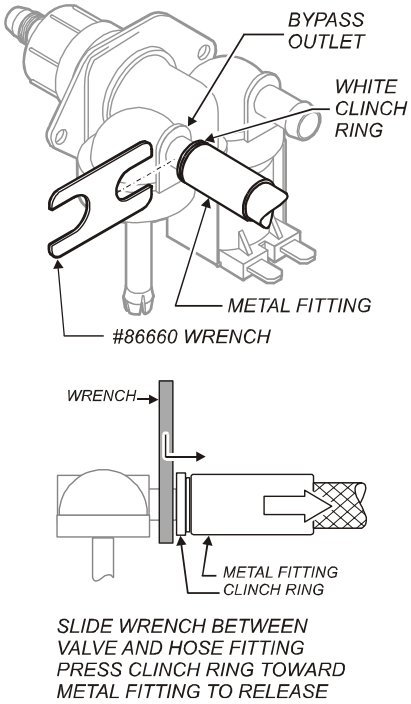

Fig. 13 Remove Faucet Supply from Solenoid

CLEAN SOLENOID SCREEN

Symptom: Automatic brewer will not flow water.

Unplug power cord or turn circuit breaker *OFF*. Turn *OFF* and disconnect water supply from brewer inlet fitting.

Unscrew water inlet fitting from solenoid.

Using needle-nose pliers, withdraw strainer screen from solenoid. Clean screen under faucet. A stiff bristle brush may be used if necessary.

Reinsert screen in solenoid. Be careful to maintain correct orientation. (The *OPEN END* of the screen goes in *FIRST*.)

Reassemble in reverse order.

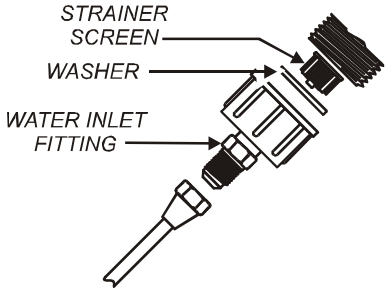

Fig. 14 Clean Strainer Screen

IMPORTANT: When replacing water faucet coil, also replace seal gaskets.

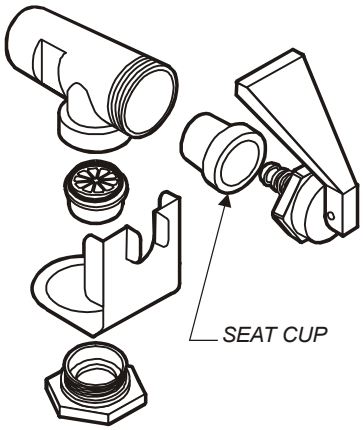

Fig. 15 Faucet Repair

NOTE: Any abrasion or roughness on the flat end of the seat cup will require replacing the seat cup:

Work the seat cup out of the bonnet and off of the end of the stem.

Install a new seat cup, making sure the knob on the stem is fully inserted into the pocket of the seat cup, and the skirt of the seat cup is fully inserted into the bonnet.

REPLACE TIMER ASSEMBLY

Unplug power cord or turn circuit breaker OFF.

Remove front panel. Remove knob and three screws holding timer to bracket. Disconnect wiring to timer.

Reassemble in reverse order.
Adjust timer as described on page 16

REPLACE HOT WATER FAUCET COIL

Symptom: Brewer drips continuously from brew head, except when faucet valve is turned OFF.

Remove tank lid assembly per above.

Remove two hex nuts hot water coil to cover. Pull coil from mounting holes.

Reassemble in reverse order.

REPAIR HOT WATER FAUCET

Remove top panel and turn faucet valve OFF.

Unscrew aerator cap from faucet and remove handle retaining clip. Do not let faucet body turn.

Pull bonnet assembly from faucet body.

Examine the interior of the faucet body and the surface of the seat cup. Clean out any debris in the faucet body, using a stiff bristle brush if necessary.

Examine the aerator. Clean any debris from the screen or flow straightener, using a stiff bristle brush if necessary.

Reassemble in reverse order.

REPLACE CONTROL PANEL LIGHT or SWITCH

Unplug power cord or turn circuit breaker OFF.

Using Switch Removal Tool (p/n 83209) to remove TEA VOLUME SELECT, BREW SWITCH or STOP BREW switch. Use a thin screwdriver to pry light or COFFEE/TEA switch from mounting hole. Disconnect leads.

Reassemble in reverse order.

PROCEDURE: Delime the Water Tank

PRECAUTIONS: Disconnect brewer from electric power.
Allow brewer to cool.

FREQUENCY: As required (Brewer slow to heat)

TOOLS: Deliming Solution
Protective Gloves, Goggles & Apron
Mild Detergent, Clean Soft Cloth or Sponge
Bristle Brush, Bottle Brush
Large Sink (or other appropriate work area)

1. Unplug power cord. Turn off the water shut-off valve and disconnect the water supply line from the brewer inlet fitting.
2. Remove the tank lid assembly as described on page 13.
3. Remove the water tank from the brewer body by lifting straight up. Empty all water from the tank. Set the tank back into the brewer.
4. Mix 2 quarts of deliming solution according to the manufacturer's directions. Carefully pour the deliming solution into the water tank. Lower the lid assembly back onto the tank. Allow to sit for 30 minutes, or as directed by the manufacturer.
5. At end of soaking period, remove lid assembly from tank. Thoroughly rinse internal components of lid assembly with clear water. Using a stiff bristle brush, scrub the heating element and faucet water coil to remove lime and calcium build-up. Rinse with clean water. Store lid assembly in a safe location.
6. Remove the tank from the brewer and empty. Using a stiff bristle brush, scrub the interior of the water tank to remove lime and calcium build-up. Rinse with clean water.
7. Set the tank back into the brewer. Reassemble the tank lid to the water tank. Make sure the gasket is properly in place, then reinstall lid clamps.
8. Reinstall wiring to heating element and thermostat. Reassemble piping for the faucet. Verify that all internal components are dry, then reinstall the top panel.
10. Reconnect brewer to electrical supply and reconnect water supply.
11. Install the brew chamber without filter paper or grounds. Run at least three full brew cycles and discard all water generated.
12. Brewer is ready to use.

CAUTION: CHEMICAL BURN HAZARD

Deliming chemicals are caustic. Wear appropriate protective gloves and goggles during this procedure.
Never siphon deliming chemicals or solutions by mouth.
This operation should only be performed by qualified and experienced service personnel.

IMPORTANT: DO NOT spill, splash or pour water or deliming solution into or over any internal component other than the inside of the water tank.

IMPORTANT: DO NOT allow any internal components to come into contact with the deliming solution. Take care to keep all internal components dry.

NOTE: Repeat steps 4 thru 5 as required to remove all scale and lime build-up.

NOTE: Normally, silicone hoses do not need to be delimed. Should deliming hoses become necessary, Bloomfield recommends replacing the hoses.

8781A EXPLODED VIEWS & PARTS LIST

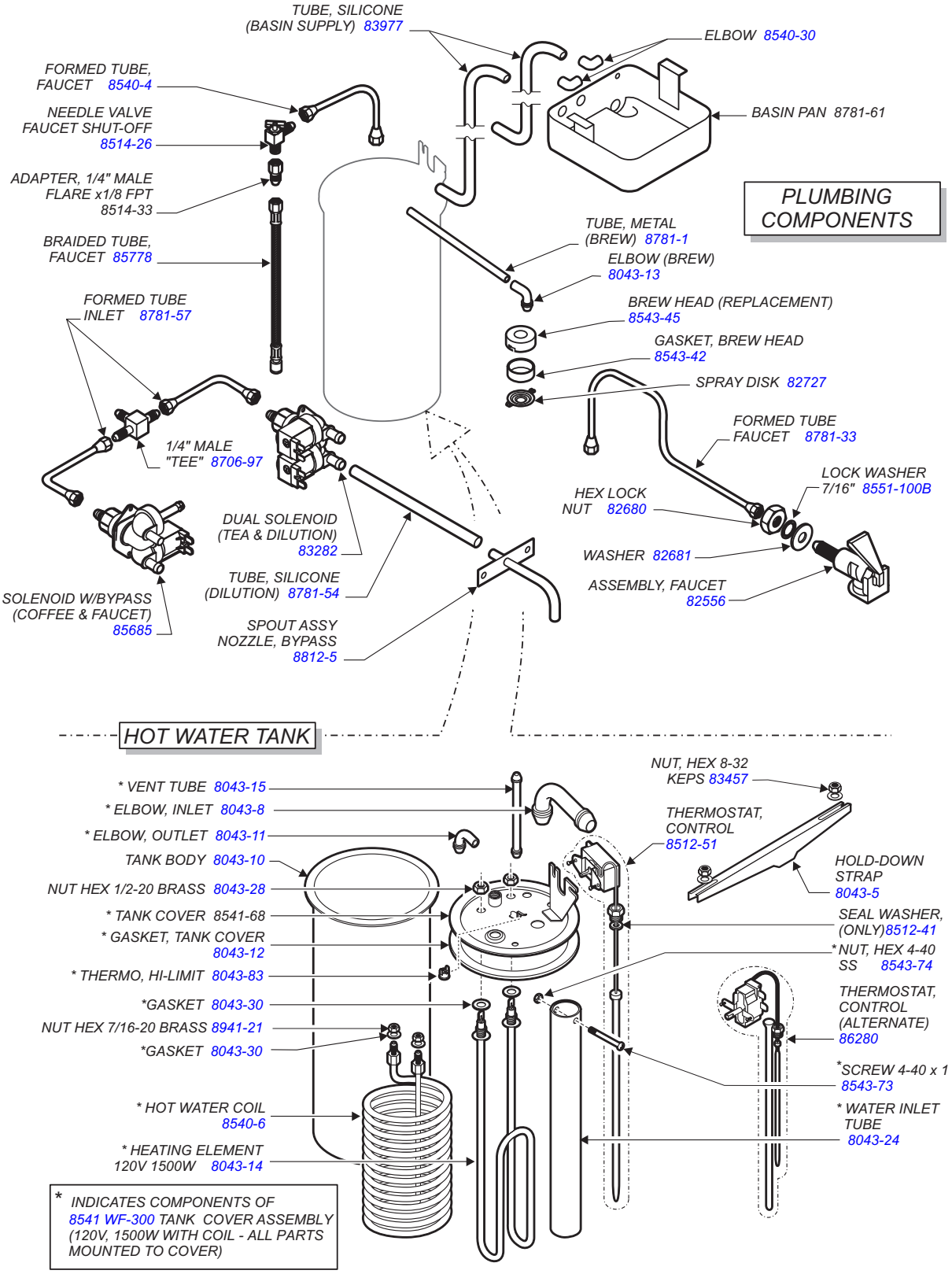

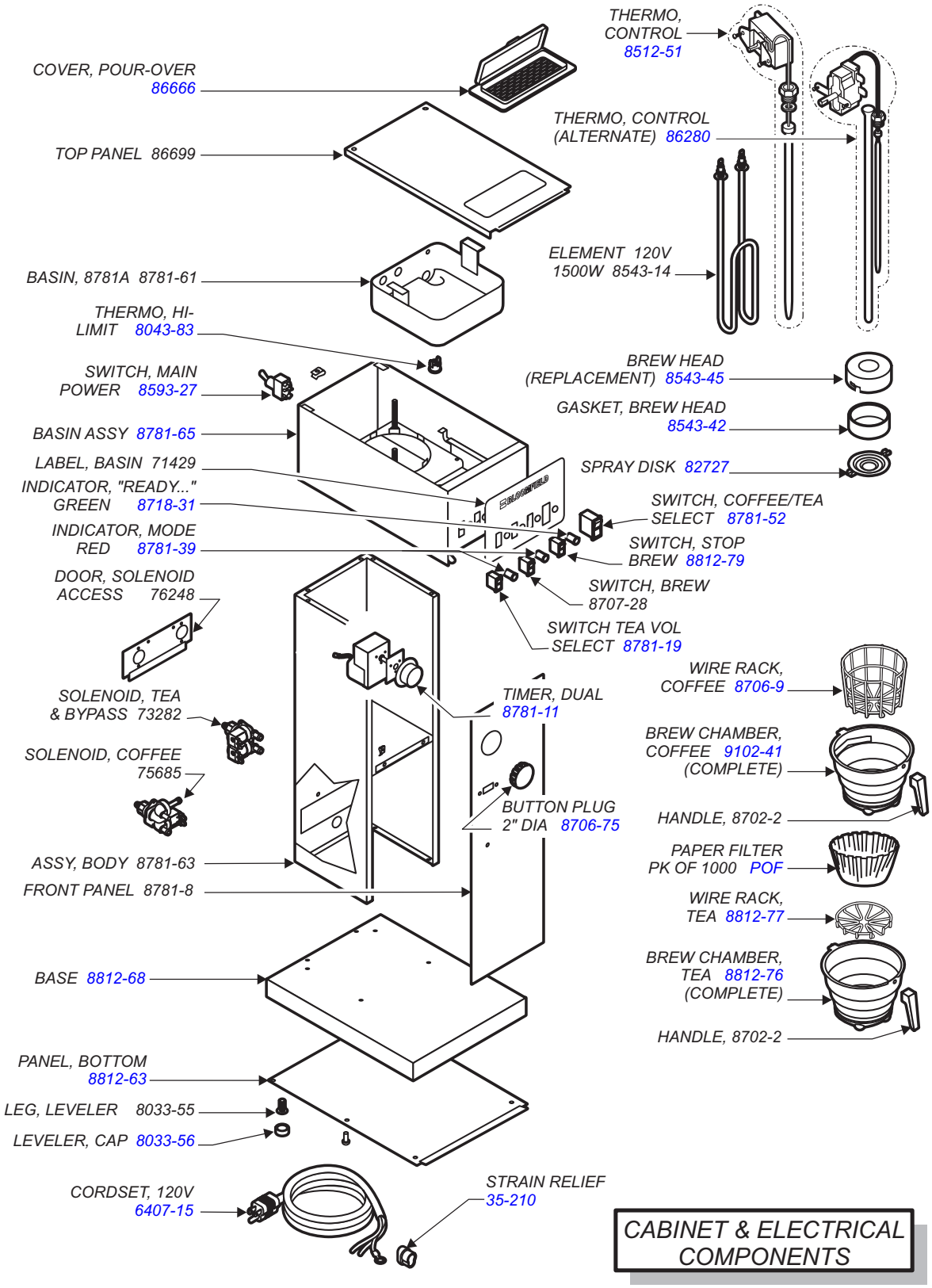
COVER, POUR-OVER 86666
TOP PANEL 86699
BASIN, 8781A 8781-61
THERMO, HI-LIMIT 8043-83
SWITCH, MAIN POWER 8593-27
BASIN ASSY 8781-65
LABEL, BASIN 71429
INDICATOR, "READY..." GREEN 8718-31
INDICATOR, MODE RED 8781-39
DOOR, SOLENOID ACCESS 76248
SOLENOID, TEA & BYPASS 73282
SOLENOID, COFFEE 75685
ASSY, BODY 8781-63
FRONT PANEL 8781-8
BASE 8812-68
PANEL, BOTTOM 8812-63
LEG, LEVELER 8033-55
LEVELER, CAP 8033-56
CORDSET, 120V 6407-15
STRAIN RELIEF 35-210
THERMO, CONTROL 8512-51
THERMO, CONTROL (ALTERNATE) 86280
ELEMENT 120V 1500W 8543-14
BREW HEAD (REPLACEMENT) 8543-45
GASKET, BREW HEAD 8543-42
SPRAY DISK 82727
SWITCH, COFFEE/TEA SELECT 8781-52
SWITCH, STOP BREW 8812-79
SWITCH, BREW 8707-28
SWITCH TEA VOL SELECT 8781-19
TIMER, DUAL 8781-11
BUTTON PLUG 2" DIA 8706-75
WIRE RACK, COFFEE 8706-9
BREW CHAMBER, COFFEE 9102-41 (COMPLETE)
HANDLE, 8702-2
PAPER FILTER PK OF 1000 POF
WIRE RACK, TEA 8812-77
BREW CHAMBER, TEA 8812-76 (COMPLETE)
HANDLE, 8702-2
CABINET & ELECTRICAL COMPONENTS

8781A SERVICE KITS

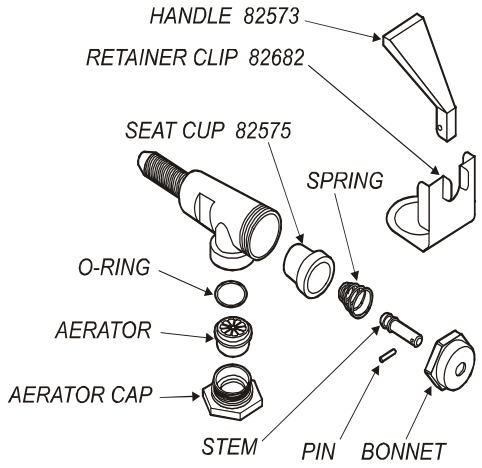

SERVICE KITS

FAUCET REPAIR KITS

- 82573 Handle
- 82575 Seat Cup
- 82576 Faucet Repair Kit (Includes Handle, Seat Cup, Spring, Stem, Pin & Bonnet
- 82682 Retainer Clip
- 84804 Aerator Replacement Kit (Includes O-Ring, Aerator Disk & Aerator Cap
- 84870 Aerator Repair Kit (Includes O-Ring & Aerator Disk)

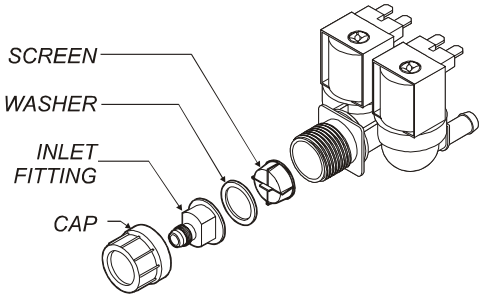

SOLENOID REPAIR KITS

- 73282 Solenoid Complete, Dual (.60 gpm + .19 gpm)
- 75685 Solenoid, Complete, (.75 gpm with Bypass)
- 85218 Inlet Fitting Kit (Includes Screen, Washer, Inlet Fitting & Cap)
- 85219 Inlet Strainer

TANK LID ASSEMBLY

- 8541WF-300 Spare Cover Assembly (120V, 1500W, With Hot Water Coil - all parts mounted to cover)

8781A WIRING DIAGRAM

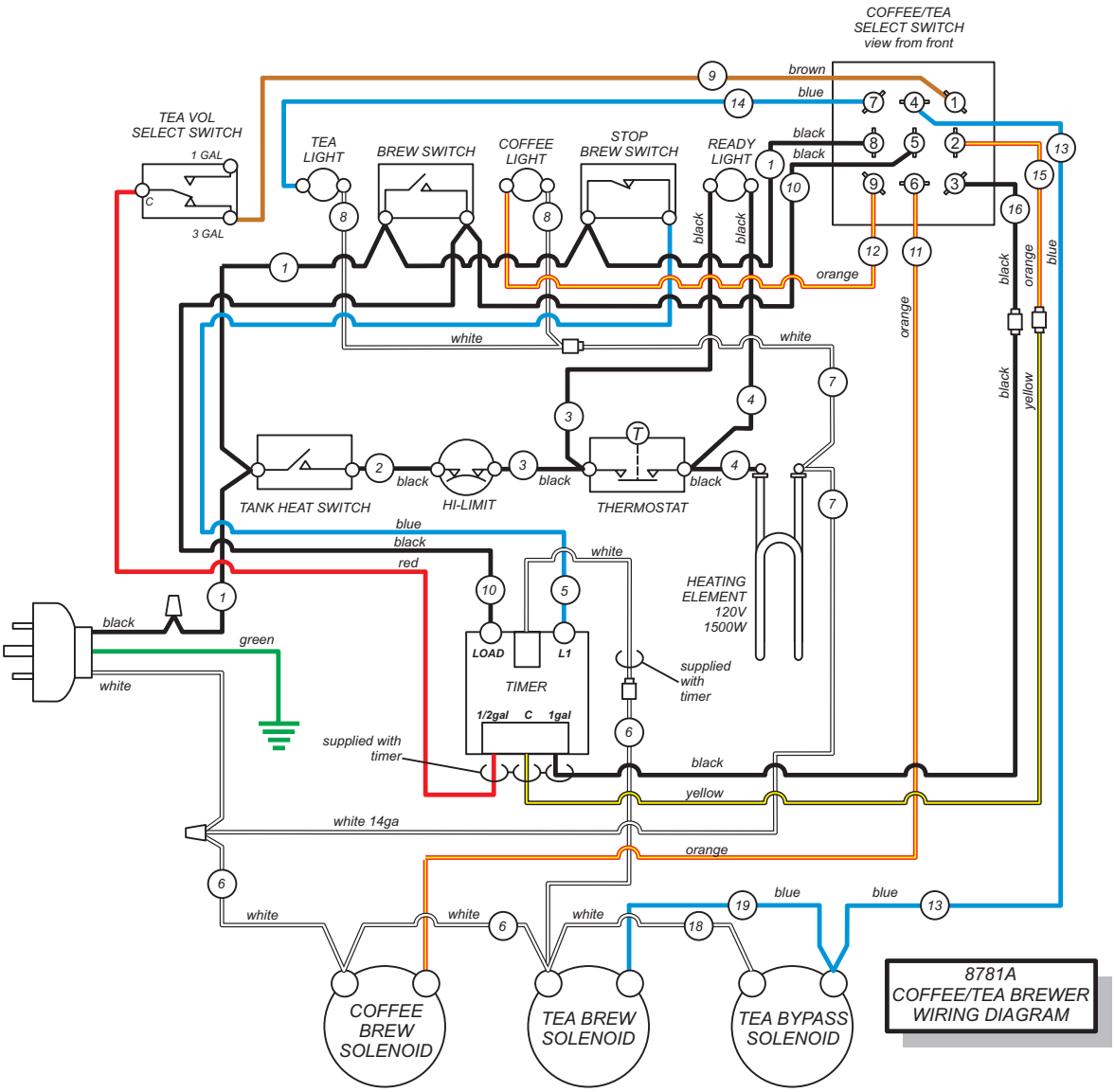

CFESA
Commercial Food Equipment Service Association

Wells Bloomfield proudly supports CFESA
Commercial Food Equipment Service Association

SERVICE TRAINING - QUALITY SERVICE

Genuine Parts
Protect - YOU - All - Ways

NAFEM CFESA

CUSTOMER SATISFACTION

BLOOMFIELD

WELLS BLOOMFIELD, LLC

10 SUNNEN DRIVE, P.O. BOX 430129, St. Louis, MO 63143
telephone: 314-781-2777 fax: 314-781-2714
www.wellsbloomfield.com

PRINTED IN UNITED STATES OF AMERICA