SPL060407-PF-BD
June 04, 2007
Replaces SPL111205-PF-BD
November, 12, 2005

BE2136
CONVEYOR OVEN
REPLACEMENT PARTS MANUAL
(with WIRING DIAGRAMS)

BE21362DEC00208V
BE21362DFC00240V
BE21362DGC00480V
BE21362DHC00380-400V
BE21362DVC00380V-CE

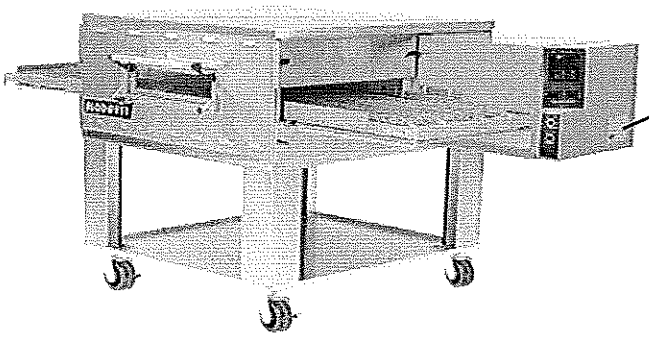

Serial Tag Location

EFFECTIVE with SERIAL #401811005 and AFTER

Serial # Code
First 4 digits- order of production
Fifth digit- model specific
Sixth and Seventh digit- month of production
Eighth and Ninth digit- year of production

Table of Contents: Page 2

BLODGETT CONVEYOR OVENS, 1400 Toastmaster Drive, Elgin, IL 60120
Telephone: 847-741-3300 Fax Number 847-741-4406

www.blodgett.com

email: techsupport@middleby.com

Table of Contents

Spec Sheet 3

Key Parts 5

View of Installation Kit 6

Parts for Installation Kit 7

View of Stacking Kit (BE Series on top of older SG series) 8

Parts for Stacking Kit (BE Series on top of older SG series) 9

View of Panels, End Plugs and Window 10

Parts for Panels, End Plugs and Window 11

View of Right-hand Electrical Compartment 12

Parts for Right-hand Electrical Compartment 13

View of Left-hand Electrical Compartment 14

Parts for Left-hand Electrical Compartment 15

View of Rear Compartment and Blowers 16

Parts for Rear Compartment and Blowers 17

View of Single-Belt Conveyor 18

Parts for Single-Belt Conveyor 19

View of Split-Belt Conveyor 20

Parts for Split-Belt Conveyor 21

Standard Finger Placement and Part Numbers 22

Wiring Diagrams (electrical schematics)
Blodgett BE2136 E208–240 Volt, 3 Phase
ENG/UK/GM/FR/SP 58214E 23

Blodgett BE2136 E380–480 Volt, 3 Phase
ENG/UK/GM/FR/SP 58267D 24

Blodgett BE2136 E208–240 Volt, 3 Phase
IT/GR/DN/DU 58245D 25

Blodgett BE2136 E380–480 Volt, 3 Phase
IT/GR/DN/DU 58269D 26

Blodgett BE2136 E380V CE, 3 Phase
UK/GM/FR/SP 58330D 27

Blodgett BE2136 E380V CE, 3 Phase
IT/GR/DN/DU 58332D 28

BLODGETT®

MODELS BE2136 & BG2136

Electric/Gas Conveyor Oven

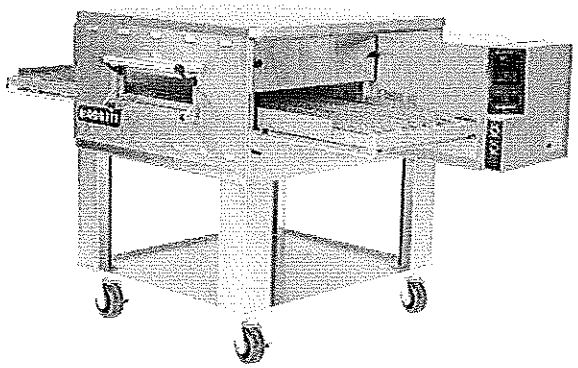

OPTIONS AND ACCESSORIES
(AT ADDITIONAL CHARGE)
-Solid Front
-High speed conveyor (1-10 minutes)
-Twin belt with individually adjustable speed settings
-One year additional extended warranty
-Stacking Kit- stack new oven on top of SG series

Project _____

Item No. _____

Quantity _____

Blodgett conveyor oven with 20" (508mm) wide conveyor assembly and 36" (915mm) baking zone length. Single, double or triple stack models.

All data is shown per oven section, unless otherwise indicated.

EXTERIOR CONSTRUCTION

- Stainless steel front, top, sides, and interior
- Aluminized steel back
- Full drop down front window

INTERIOR CONSTRUCTION

- Stainless steel outer plates
- Stainless steel wire mesh conveyor belt assembly
- Two blower inlets in the plenum for air circulation
- Upper and lower air fingers

OPERATION

- Heat transferred through forced convection (impingment)
- Open vented baking compartment
- Solid state digital controls to display set point and actual temperature as well as belt speed
- Electronic spark ignition control system (gas model)
- Atmospheric type burner (gas model)
- Internal gas pressure regulator (gas model)
- Tubular resistance elements (electric model)
- Solid state speed control with motor feedback
- 3-30 minute bake time

STANDARD FEATURES

- Patented energy efficient system that improves cooking results and saves energy
- Front mounted digital control
- Large front loading door with window and stainless steel handle
- Folding removable conveyor belt assembly
- Adjustable belt tensioning feature
- Field reversible belt direction
- One 8" extension tray
- Product stop
- 48" flexible gas hose (gas units only)
- Lower shelf on single and double stack ovens
- 6' cord with NEMA #L6-20P plug (gas model)
- 3/4" NPT (gas model)
- Oven start-up*
- One year parts & labor warranty*

* *For all international markets, contact your local distributor.*

BLODGETT OVEN COMPANY
www.blodgett.com
1400 Toastmaster Drive, Elgin, IL USA 60120 • Phone: (847) 741-3300 • Fax: (847) 741-0015

MODEL BE2136 & BG2136

APPROVAL/STAMP

DIMENSIONS ARE IN INCHES [MM]

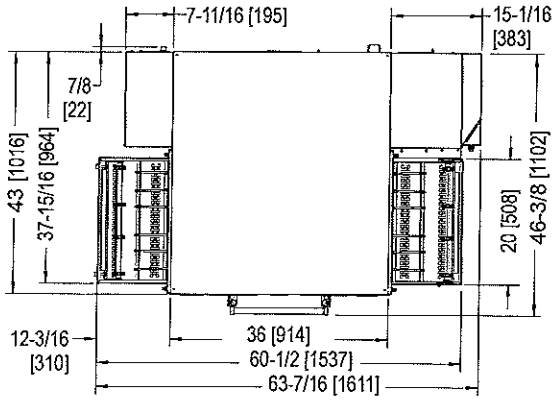

TOP VIEW

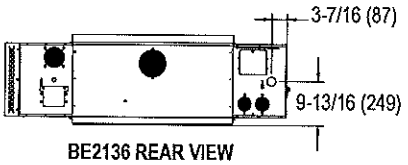

BE2136 REAR VIEW

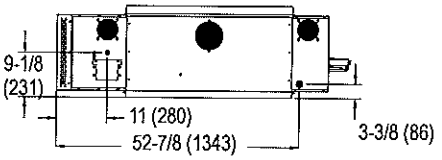

BG2136 REAR VIEW

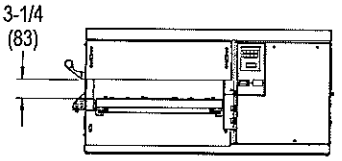

END VIEW

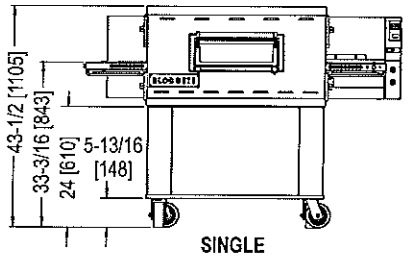

SINGLE

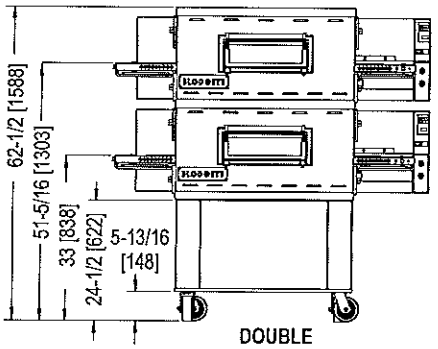

DOUBLE

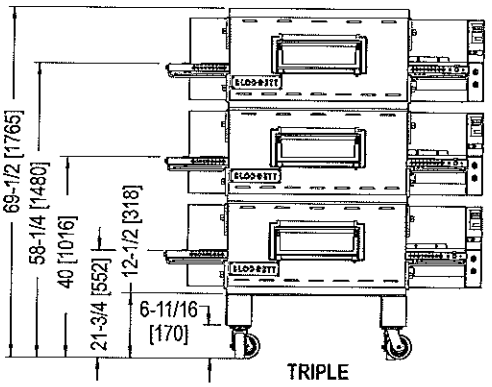

TRIPLE

SHORT FORM SPECIFICATIONS

Provide Blodgett conveyor model BE2136 (electric) or BG2136 (gas) conveyor oven. Unit shall shall cook by means of forced, heated air. Unit shall be (single/double/triple) deck. Each deck shall be fully independent, of stainless steel construction, and fully insulated on all sides. Provide with (electronic spark ignition gas fired/electrically heated) baking compartment with two blowers to evenly distribute heat across baking zone. Conveyor belts shall be single - 18" (457mm) belt constructed of stainless steel wire mesh; baking zone length shall be 36" (915mm). Unit shall be provided with drop down front window. Control panel shall be solid state with 550°F (288°C) maximum thermostat and LCD display of 3-30 minutes adjustable belt speed. Provide start-up inspection service by a factory authorized service agent. Provide options and accessories as indicated.

DIMENSIONS:

Floor space	60" (1524mm) W x 46-3/8" (1092mm) L		
Product clearance	3-1/4" (83mm)		
Combustible wall clearance	**Left**	**Right**	**Rear**
BE2136	1" (25mm)	1" (25mm)	3" (76mm)
BG2136	1" (25mm)	1" (25mm)	3" (76mm)
Baking zone			
Width	20" (508mm)		
Length	36" (914mm)		

MAXIMUM INPUT: (per section)

BE2136	17 kW
BG2136	75,000 BTU/hr (22 KW) (79 MJ/hr)

GAS SUPPLY: (specify)

	Natural	**Propane**
Oven per cavity	3/4" NPT	3/4" NPT
Main gas supply	2" line	1-1/2" line
Minimum Gas Pressure:	6" W.C.	11.0" W.C.
Maximum Gas Pressure:	12" W.C.	14" W.C.

NOTE: Blodgett Oven, in accord with its policy to continually improve its products, reserves the right to change materials or specifications without notice. Such revisions do not entitle the buyer to corresponding changes, improvements, additions, or replacements for previously purchased equipment.

POWER SUPPLY *(must have dedicated ground)*

BE2136	
Domestic	208 VAC, 50/60 hz, 3 ph, 54 amp, 17 kW, 3-wire plus gnd
	240 VAC, 50/60 hz, 3 ph, 47 amp, 17 kW, 3-wire plus gnd
International	380 VAC, 50/60 hz, 3 ph, 32 amp, 17 kW, 3-wire plus N and gnd
	480 VAC, 50/60 hz, 3 ph, 27 amp, 17 kW, 3-wire plus N and gnd
CE	380 VAC, 50/60 hz, 3 ph, 32 amp, 17 kW, 3-wire plus N and gnd
BG2136	
All	208-240 VAC, 50/60 Hz, 1 ph, 6 amp., 2-wire plus ground

MINIMUM ENTRY CLEARANCE:

Uncrated 19-1/2" (495mm)

SHIPPING INFORMATION:

Approx. Weight:

Single	658 lbs. (299 kg)
Double	1255 lbs. (570 kg)
Triple	2449 lbs. (1112 kg)

BLODGETT OVEN COMPANY

www.blodgett.com • 1400 Toastmaster Drive, Elgin, IL USA 60120 • Phone: (847) 741-3300 • Fax: (847) 741-0015

BE2136 ELECTRIC CONVEYOR OVEN KEY PARTS

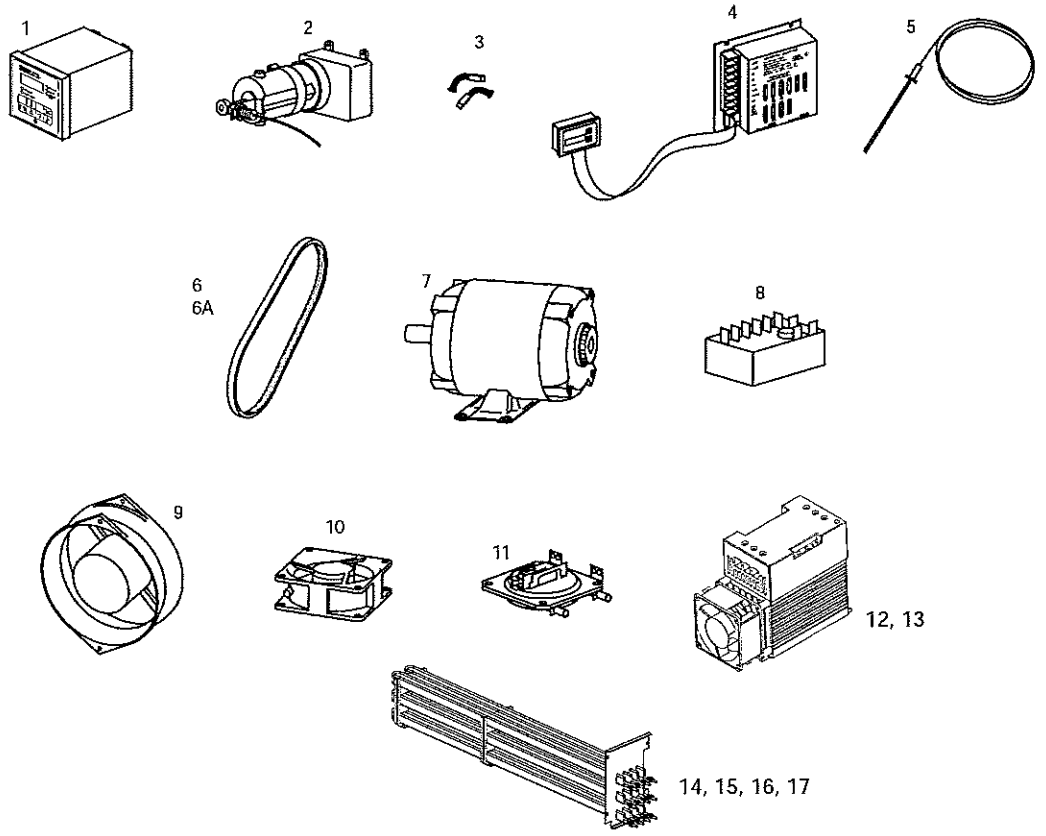

ITEM	QTY USED		P/N	DESCRIPTION
	SINGLE BELT	TWIN BELT		
1	1	1	47321	DIGITAL TEMPERATURE CONTROLLER
2	1	2	58390	CONVEYOR DRIVE MOTOR W/MAGNET
3	1	2	58484	KIT (2-BRUSHES, 2-CAPS)
4	1	2	58323	KIT, CONVEYOR SPEED CONTROLER (37337)
5	2	2	33984	KIT, THERMOCOUPLE 6"
6A	1	1	51428	BELT, BLOWER, STANDARD RPM (1725)
6B	1	1	50517	BELT, BLOWER, HIGH RPM (2400) (OPTIONAL)
7	1	1	44687	MOTOR, BLOWER, 208/230V, 1/2HP
8	1	1	33983	HIGH LIMIT CONTROL MODULE, 240V
9	1	1	36451	COOLING FAN (BACKWALL)
10	1	1	97525	COOLING FAN (CONTROL COMPARTMENT)
11	1	1	54953	AIR SWITCH
12	2	2	44914	SOLID STATE RELAY WITH COOLING FAN 208V/240V
13	2	2	44568	SOLID STATE RELAY WITH COOLING FAN 380V/480V
14	1	1	58238	HEATER 208V 17kW
15	1	1	50232	HEATER 240V 17kW
16	1	1	50587	HEATER 380V 17kW
17	1	1	50589	HEATER 480V 17kW

View of INSTALLATION KIT

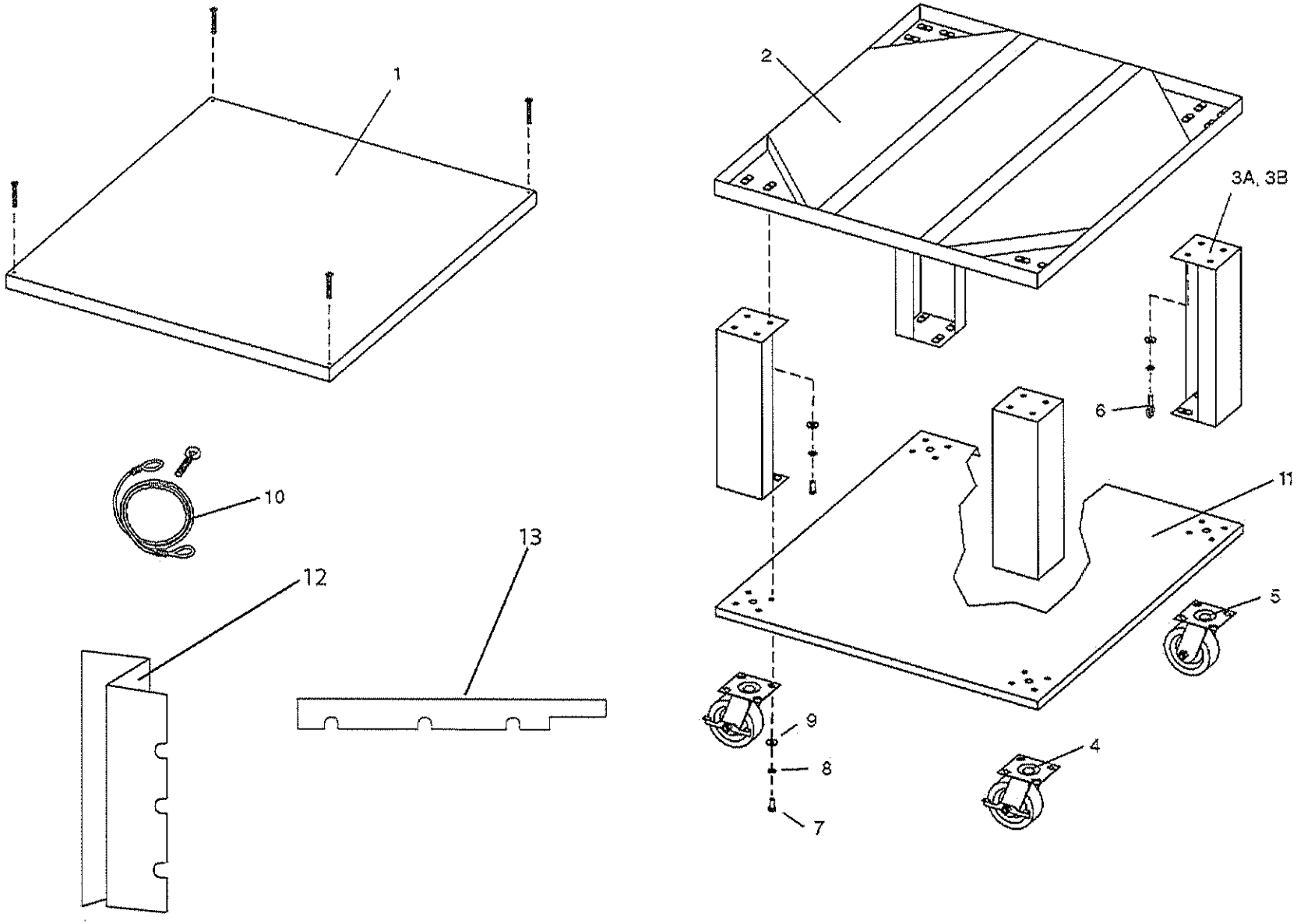

PtBINSTALLATION KIT (DOMESTIC & CE)

ITEM	58707-CE 58706 QTY. SINGLE OVEN	58709-CE 58708 QTY. DOUBLE OVEN	58711-CE 58710 QTY. TRIPLE OVEN	P/N	DESCRIPTION
1	1	1	1	48605	TOP PANEL
2	1	1	1	51977	BASE PAD, W/INSULATION
3A	4	4	--	42890	17-1/2" (445mm) LEG EXTENSION, FOR SINGLE AND DOUBLE OVENS
3B	--	--	4	44799	6" (152mm) LEG EXTENSION, FOR TRIPLE OVENS
3C	4	4	4	22450-0028	STUD-6" LEGS- CE ONLY
4	2	2	2	22290-0009	CASTER, WITH FLAT PLATE AND BRAKE
5	2	2	2	22290-0010	CASTER, WITH FLAT PLATE (NO BRAKE)
6	1	1	1	21392-0004	EYEBOLT, 3/4"
7	31	31	31	220373	HEX BOLT, 3/8"-16 x 1"
8	32	32	32	21416-0001	FLAT WASHER, 3/8"
9	32	32	32	21422-0001	LOCKWASHER, 3/8"
10	1	1	1	22450-0228	RESTRAINT CABLE ASSEMBLY
11	1	1	--	46393	LOWER SHELF - (LIP DOWN POSITION)
12	-	2	4	58453	PLATE-AIR DIVERTER
13	-	1	2	58454	PLATE-AIR BLOCK (HEAT GUARD)
14	1	1	1	58364	OWNER'S MANUAL

REV	DATE	ECN	REVISION DESCRIPTION	BY	CHK	DATE
B_	07/19/2005	005230	RELEASE FOR PRODUCTION	PC	WSS	07/19/2005

View of Stacking Kit (BE series on top of older SG series)

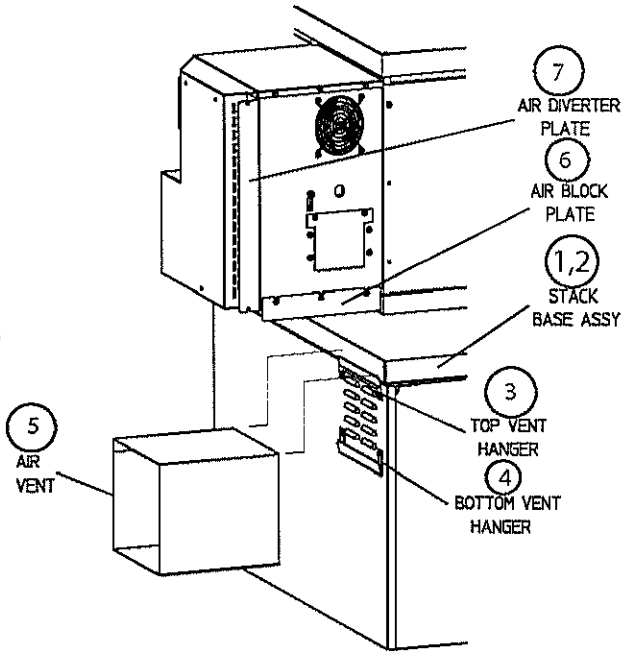

DOUBLE STACK

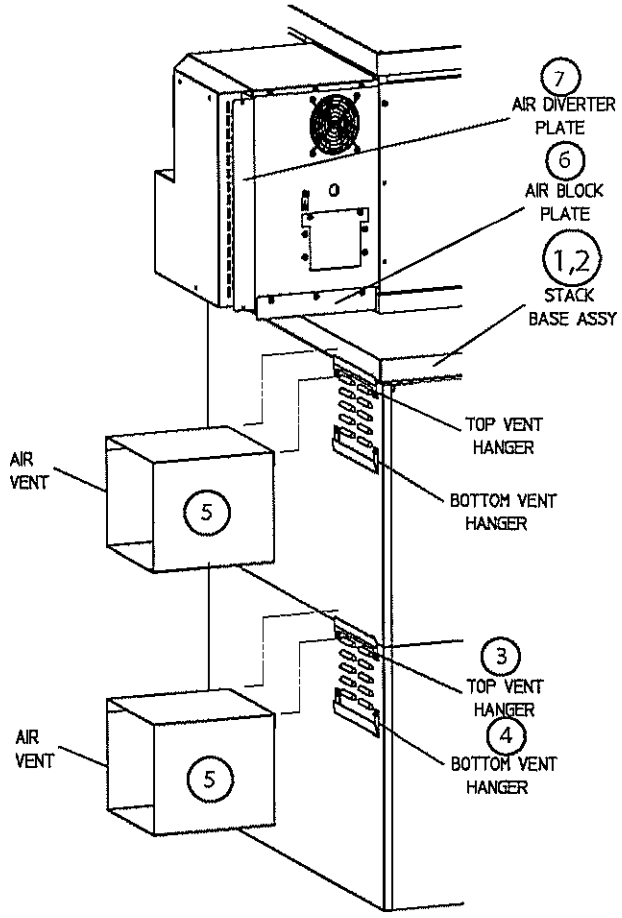

TRIPLE STACK

BE/BG/SG2136 STACKING KIT

NOTE: USE THESE INSTRUCTIONS FOR THE INSTALLATION OF THE DOUBLE AND TRIPLE STACK UNITS USING BE2136 OR BG2136 ON TOP OF SG2136 OVENS.

DOUBLE OVENS:

1. FASTEN TOP AND BOTTOM VENT HANGERS TO HOLES LOCATED AROUND THE LOUVERS WITH SCREWS THAT ARE PROVIDED.

2. SLIDE AIR VENT ONTO TOP AND BOTTOM VENT HANGERS AND PUSH DOWN UNTIL SECURE.

3. KNOCK OUT HOLES IN TOP COVER OF OVEN.

4. INSERT BASE ASSEMBLY ALIGNMENT PINS INTO MATCHING HOLES OF TOP COVER. (Item #9)

5. CAREFULLY LOWER NEW OVEN ONTO BASE ASSEMBLY MAKING SURE THAT BOTTOM OF OVEN FITS OVER BASE ASSEMLY WALLS.

6. LOOSEN SCREWS FROM CONTROL PANEL AND FASTEN AIR DIVERTER PLATE AND AIR BLOCK PLATE AS SHOWN.

MATERIAL GAUGE:		TOLERANCE UNLESS SPECIFIED ANGLES ± 1.0° DEC .X ±.030 .XX ±.015 .XXX ±.005	BLODGETT®
FINISH			
DRAWN PC 07/19/2005	CHECKED WSS 07/19/2005	APPROVED WSS 07/19/2005	
INSTR, STACK KIT BE/BG/SG2136			
ALL DIMENSIONS ARE IN INCHES UNLESS OTHERWISE SPECIFIED. DO NOT SCALE DRAWING	PART NO 58498	SHT 1 OF 1	REV B_

Parts for Stacking Kit

Item	Double Kit 58490 Qty.	Triple Kit 58496 Qty.	Component Item No.	Description
1	1	1	58414	Base Weldment
2	1	1	58492	Insulation For Base
3	1	2	M10551	Top Vent Hanger
4	1	2	M10552	Bottom Vent Hanger
5	1	2	58422	Air Vent Box
6	1	1	Contact Factory	Plate-Air Block (Heat Guard)
7	1	1	58453	Plate-Air Diverter
8	1	1	58498	Instructions
9	4	4	M3828	Alignment Pin

View of PANELS, END PLUGS and WINDOW

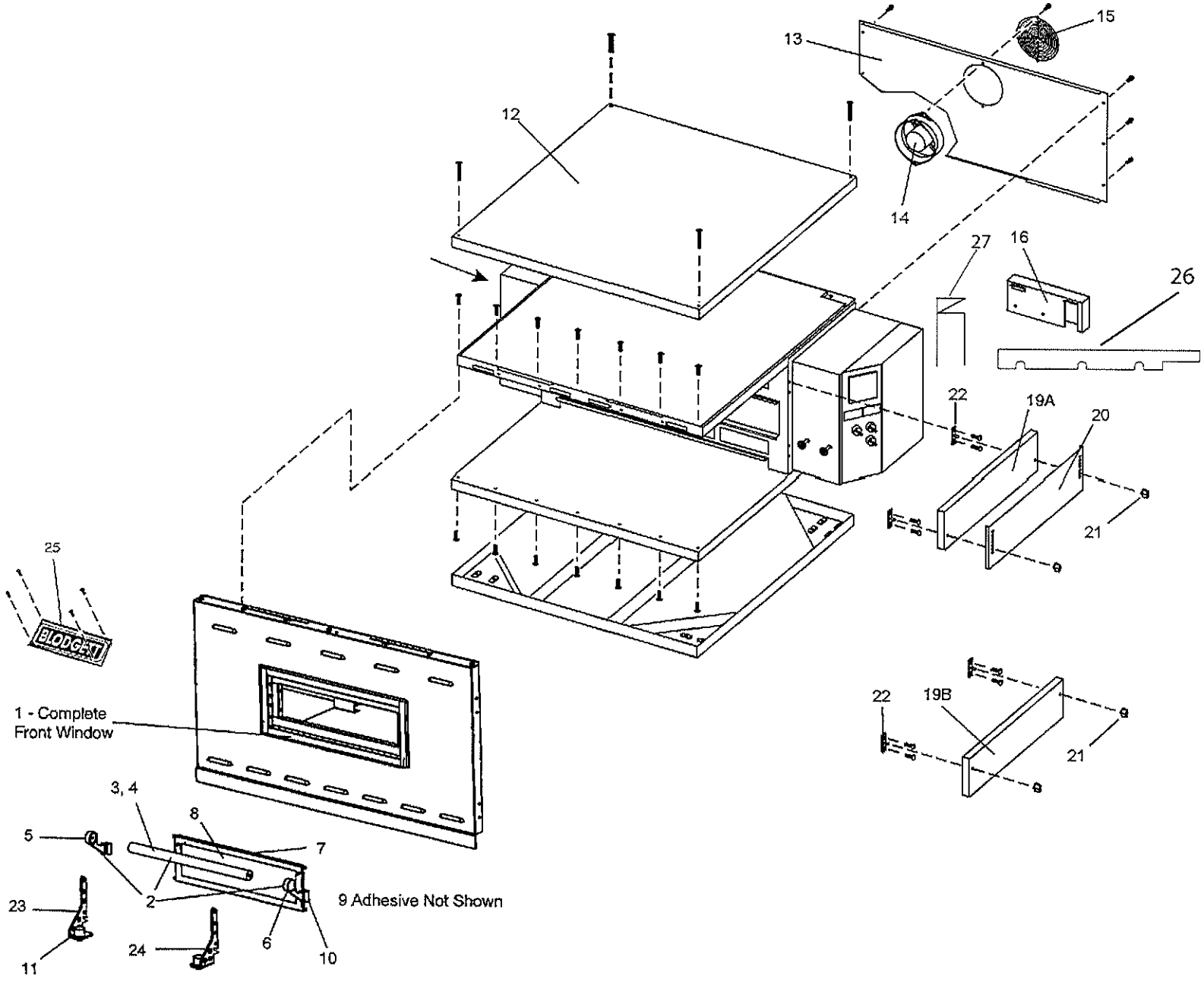

Parts for PANELS, END PLUGS and WINDOW

ITEM	QTY.	P/N	DESCRIPTION
1	1	51054	ASSEMBLY ,WINDOW, w/HANDLE, ITEMS 1-10
2	1	51081	ASSEMBLY, HANDLE, ITEMS 3-6
3	1	M10092	HANDLE, OUTER
4	1	M10127	HANDLE, INNER THREADED
5	1	M1115	HANDLE, BRACKET (LEFT)
6	1	M1116	HANDLE, BRACKET (RIGHT)
7	1	51087	FRAME AND WINDOW, ITEMS 8-9
8	1	M10198	GLASS, 4.1" X 15.150"
9	1	M1965	ADHESIVE (NOT SHOWN)
10	2	M1118	SCREW–ATTACHES HANDLE
11	2	30927	BUMPER
12	1	48605	TOP PANEL

ITEM	QTY.	P/N	DESCRIPTION
13	1	47633	BACK WALL
14	1	36451	COOLING FAN
15	1	31497	FINGER GUARD, COOLING FAN
16	1	*See pp. 18 - 21*	CHAIN COVER, UPPER
19A	2	50161	END PLUG, TOP
19B	2	48622	END PLUG, BOTTOM
20	2	42771	SLIDE, OUTER SIDE- EYE BROW
21	8	36452	WING NUT, PLASTIC
22	8	48640	BRACKET, END PLUG MOUNTING
23	1	51210	BRACKET, WINDOW HINGE (LEFT)
24	1	51211	BRACKET, WINDOW HINGE (RIGHT)
25	1	57399	BLODGETT NAMEPLATE
26	1	58454	PLATE- AIR BLOCK-HEAT GUARD
27	2	58453	PLATE- AIR DISRUPTER

View of Right-hand Electrical Compartment

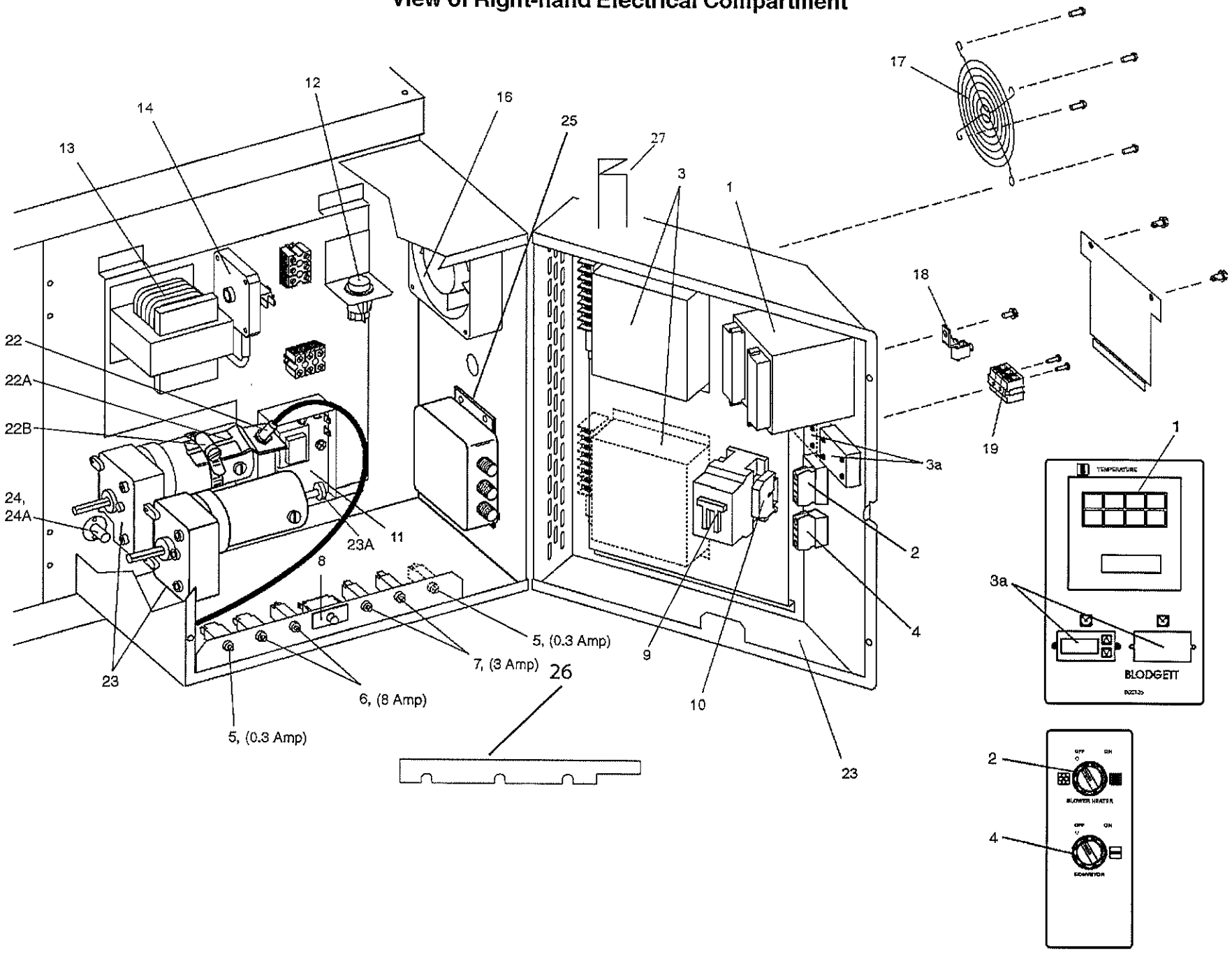

Parts for Right-hand Electrical Compartment

ITEM	QTY. SINGLE BELT	QTY. SPLIT BELT	P/N	DESCRIPTION
1	1	1	47321	DIGITAL TEMPERATURE CONTROLLER
2	1	1	46522	KIT, BLOWER/HEAT SELECTOR SWITCH W/ KNOB AND 2 CONTACT BLOCKS
3	1	2	58323	KIT, CONVEYOR SPEED CONTROLLER WITH DIGITAL DISPLAY (INC. ITEM 3A) (37337)
3A	1	2	37503	DIGITAL DISPLAY ONLY
4	1	1	46521	KIT, CONVEYOR SELECTOR SWITCH WITH KNOB AND CONTACT BLOCK
5	1	2	48635	CIRCUIT BREAKER, 0.3A (DRIVE MOTORS)
6	2	2	46831	CIRCUIT BREAKER, 8A (BLOWER MOTORS)
7	2	2	45036	CIRCUIT BREAKER, 3A (CONTROL CIRCUIT)
8	1	1	28021-0047	SAFETY SWITCH
9	1	1	28041-0011	CONTACTOR
10	2	2	33363	END STOP, CONTACTOR
11	1	1	33983	HIGH LIMIT CONTROL MODULE, 240V
12	1	1	35145	RESET SWITCH, WITH GREEN LIGHT
13	1	1	31504	TRANSFORMER, 230V PRI : 120V SEC, 200VA

ITEM	QTY. SINGLE BELT	QTY. SPLIT BELT	P/N	DESCRIPTION
14	1	1	54953	AIR SWITCH
16	1	1	97525	COOLING FAN, 230V
17	1	1	27470-0004	FINGER GUARD, COOLING FAN
18	1	1	F716A8701	GROUND LUG
19	1	1	44390	TERMINAL BLOCK, 3-POLE
22	1	2	22450-0249	SENSOR PICKUP
22A	1	2	22450-0248	BRACKET-PICKUP SENSOR
22B	1	2	220416	CLAMP-SECURES BRACKET
23	1	2	58390	MOTOR, CONVEYOR DRIVE WITH 2-POLE MAGNET
23A	1	2	39002	MAGNET 2-POLE
23B	1	2	310-0017	ADHESIVE
23D	1	2	58484	KIT, 2 BRUSHES & 2 CAPS
24	1	1	33984	KIT, THERMOCOUPLE
24A	1	1	33812-1	THERMOCOUPLE
25	1	1	33813	RFI FILTER
26	1	1	58454	PLATE-AIR BLOCK (heat guard)
27	2	2	58453	PLATE-AIR DIVERTER

View of Left-hand Electrical Compartment

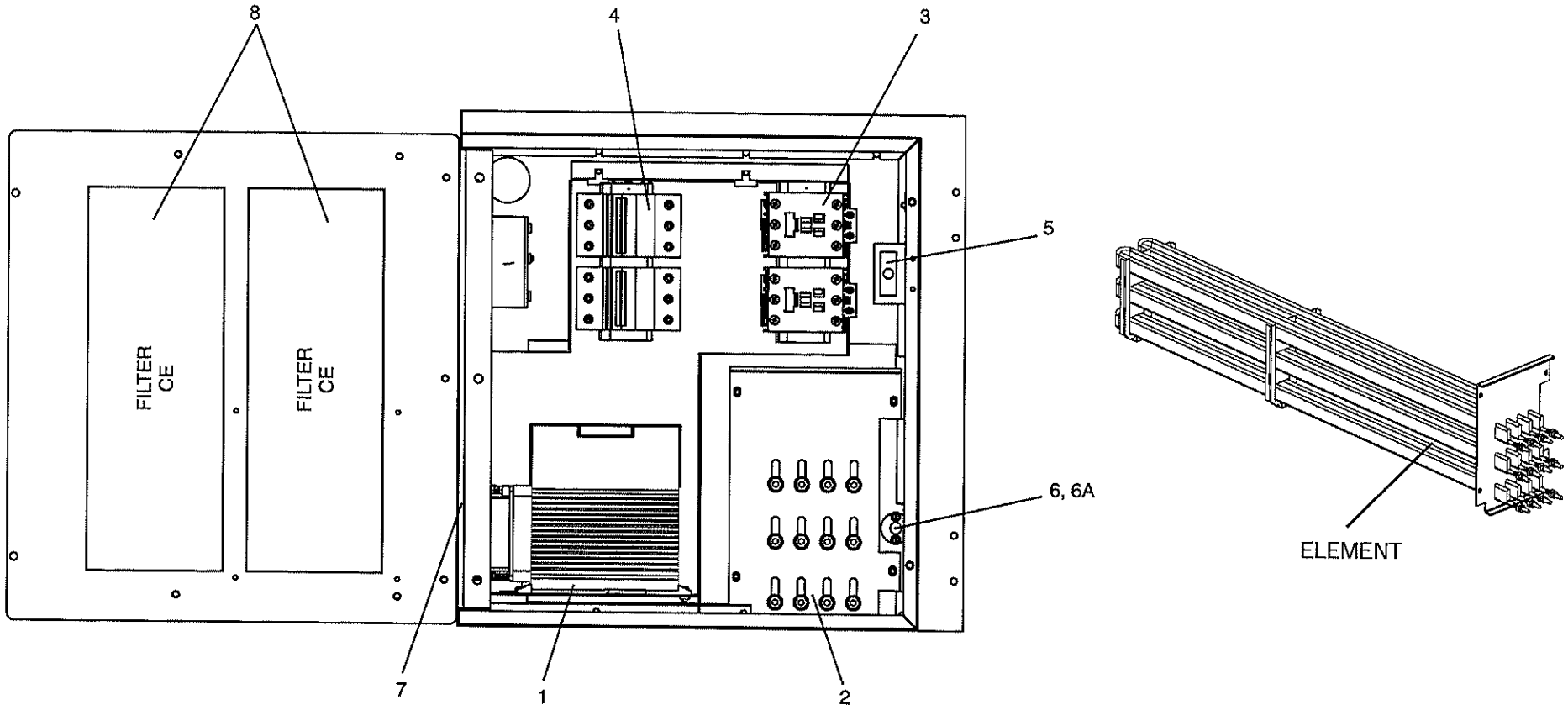

Parts for Left-hand Electrical Compartment

ITEM	QTY	PN	DESCRIPTION
1	2	44914	SOLID STATE RELAY WITH COOLING FAN 208-240V
1	2	44568	SOLID STATE RELAY WITH COOLING FAN 380-480V
2	1	58238	WLDMT, HTG ELE 208V 7KW
2	1	50232	WLDMT, HTG ELE 240V 7KW
2	1	50587	WLDMT, HTG ELE 380V 7KW
2	1	50589	WLDMT, HTG ELE 480V 7KW
3	2	45019	BREAKER, CKT 480VAC 63A 3POLE
4	2	44549	CONTACTOR, 230VAC COIL 85A
5	1	28021-0047	SWITCH, INTLCK 10A NO2P
6	1	33984	KIT, THERMOCOUPLE 6"X120 "
6A	1	33812-1	THERMOCOUPLE
7	2	58212	GUARD, FINGER
8	2	58131	FILTER, CE ONLY

View of Rear Compartment and Blowers

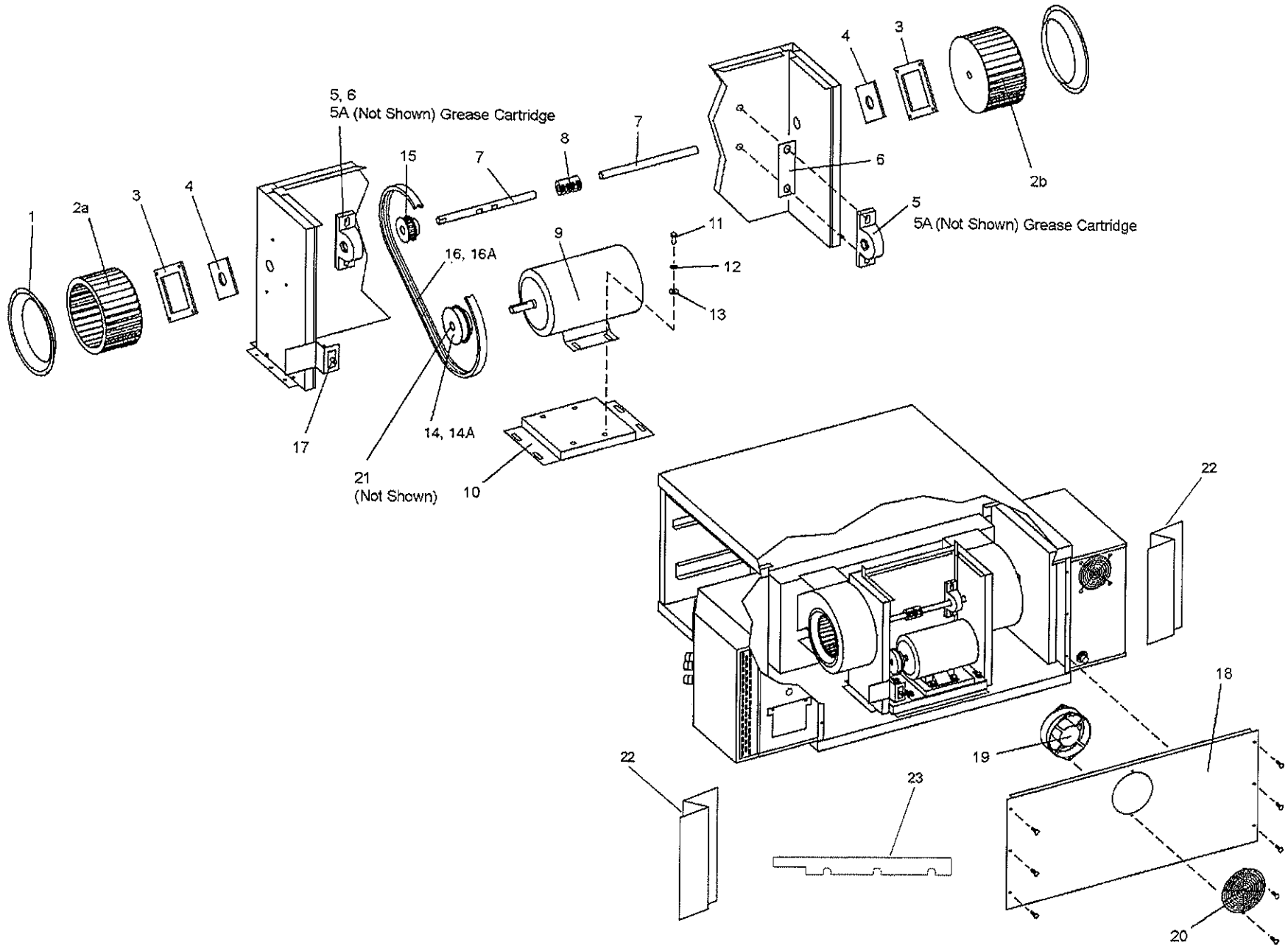

Parts for Rear Compartment and Blowers

ITEM	QTY.	P/N	DESCRIPTION
1	2	42951	INLET RING
2a	1	42752	BLOWER WHEEL (VIEWED FROM REAR OF OVEN-LEFT HAND)
2b	1	42753	BLOWER WHEEL (VIEWED FROM REAR OF OVEN-RIGHT HAND)
3	2	42999	RETAINER, TEFLON SEAL
4	2	35121-0045	TEFLON SEAL
5	2	22072-0025	BEARING, 5/8" BORE WITH STANDARD GREASE
5A	--	17110-0015	GREASE, STANDARD CARTRIDGE
6	2	50160	SHIM, BEARING
7	2	50151	BLOWER SHAFT
8	1	44748	COUPLING, BLOWER SHAFT
9	1	44687	MOTOR, BLOWER, 208/230V, 1/2HP
10	1	44688	PLATE, MOTOR MOUNTING
11	4	A3896	SCREW, HEX CAP HEAD 5/16"-18 X 7/8"

ITEM	QTY.	P/N	DESCRIPTION
12	4	B301A8847	FLAT WASHER, 5/16"
13	4	A3682	LOCK WASHER, 5/16"
14A	1	50224*	PULLEY-MOTOR (STANDARD 1725 RPM) 1.80" DIA.
14B	1	50260*	PULLEY-MOTOR(HIGH SPEED 2400 RPM) 2.487" DIA.
15	1	50224*	PULLEY, BLOWER SHAFT 1.80" DIA.
16A	1	51428*	BELT (STANDARD 1725 RPM) 160 J
16B	1	50517*	BELT, (50/60Hz) (HIGH SPEED 2400 RPM) 170 J
17	1	28021-0061	SAFETY SWITCH
18	1	47633	BACK WALL
19	1	36451	COOLING FAN-230V
20	1	31497	FINGER GUARD, COOLING FAN
21	1	50259*	BUSHING (HIGH SPEED 2400 RPM)-SPLIT TAPER
22	2	58453	PLATE-AIR DISPUTER
23	1	58454	PLATE-AIR BLOCK (HEAT GUARD)

RPM	RPM KIT P/N	HERTZ	MOTOR PULLEY W/SPLIT BUSHING	ITEM14 ITEM 21 MTR PULLEY P/N SPLIT BUSH P/N	BLWR SHAFT PULLEY DESCRIPTION	ITEM 15 BLWR SHAFT PULLEY	BELT SIZE DESCRIPTION	ITEM 16 BELT P/N	RPM OF FAN
Optional HIGH SPEED	50256	60 50	POLY G BUSHING	50260 50259	POLY V	50224	POLY V	50517	2400 1950
STD SPEED	51427	60	POLY V	50224	POLY V	50224	POLY V	51428	1725

View of Single-Belt Conveyor - Standard Speed (3-30 Minutes), High Speed (1-10 minutes)

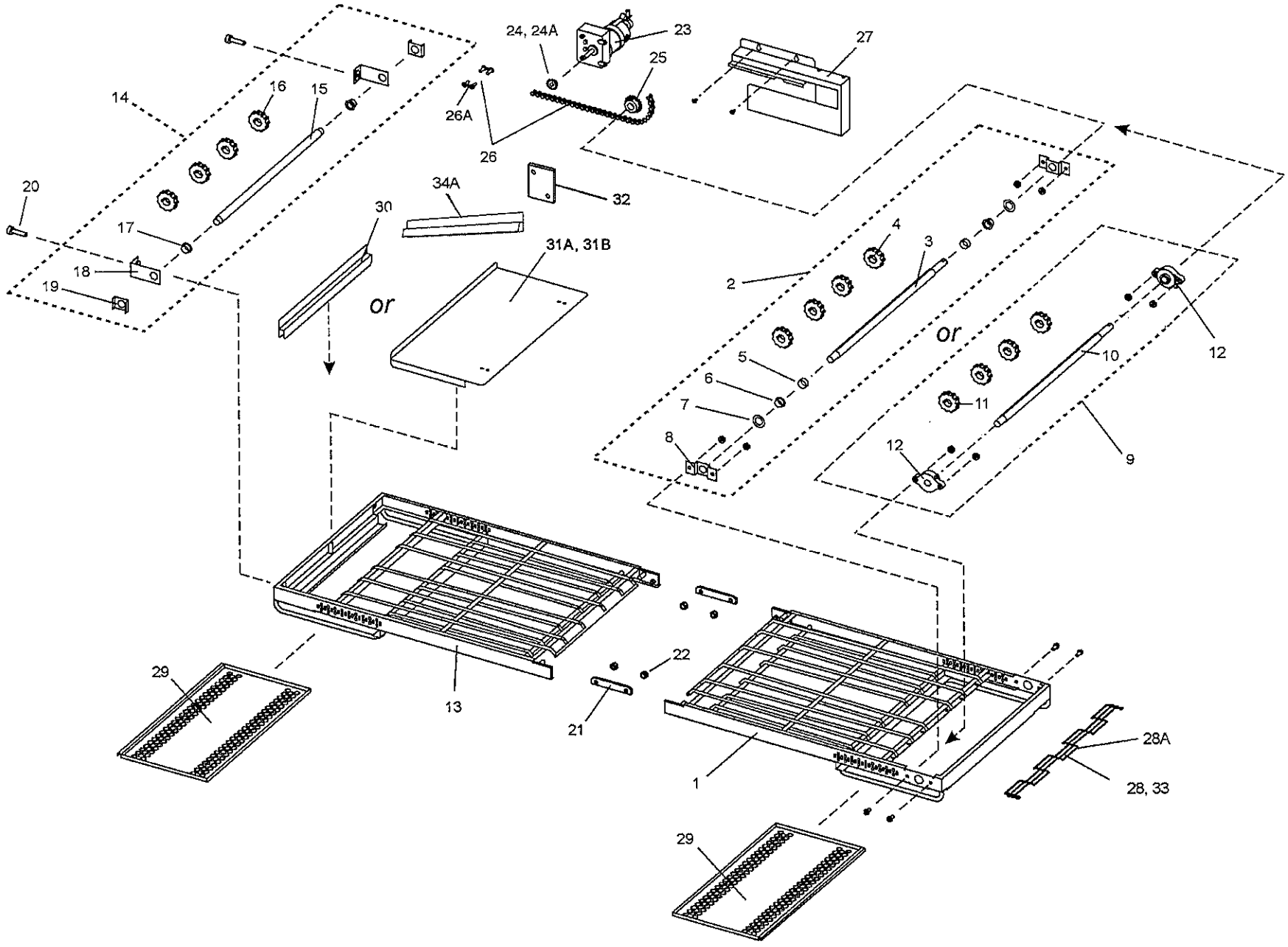

Parts for Single-Belt Conveyor - Standard Speed (3-30 Minutes), High Speed (1-10 minutes)

ITEM	QTY.	P/N - 60" CONVEYOR		P/N - 76" CONVEYOR	DESCRIPTION
1	1	48847		48790	FRAME, DRIVE SIDE
2	1	<- - -	48797	- - - - >	ASSEMBLY, STANDARD DRIVE SHAFT (INC. ITEMS 3-8)
3	1	<- - -	48781	- - - - >	DRIVE SHAFT
4	4	<- - -	22229-0003	- - - - >	SPROCKET, CONV. BELT
5	2	<- - -	43275	- - - - >	SPACER
6	2	<- - -	22034-0003	- - - - >	BUSHING, BRONZE 5/8" I.D.
7	2	<- - -	35000-1080	- - - - >	SPACER, NYLON
8	2	<- - -	49972	- - - - >	BRACKET, DRIVE SUPPORT
9	1	<- - -	48782	- - - - >	ASSEMBLY, HIGH SPEED DRIVE SHAFT (INC. ITEMS 10-11)
10	1	<- - -	48781	- - - - >	DRIVE SHAFT
11	4	<- - -	22229-0003	- - - - >	SPROCKET, CONV. BELT
12	2	<- - -	45377	- - - - >	FLANGE BEARING (HIGH SPEED ONLY)
13	1	48746		48795	FRAME, IDLER SIDE
14	1	48780		48780	ASSEMBLY, IDLER SHAFT (INC. ITEMS 15-19)
15	1	<- - -	48779	- - - - >	IDLER SHAFT
16	4	<- - -	22229-0003	- - - - >	SPROCKET, CONV. BELT
17	2	<- - -	22034-0003	- - - - >	BUSHING, BRONZE 5/8" I.D.
18	2	37000-0413		37000-0413	BRACKET, IDLER ADJUSTMT.
19	2	<- - -	54947	- - - - >	BRACKET, IDLER SUPPORT
20	2	35000-1008		35000-1008	SCREW, IDLER ADJUSTMENT
21	2	<- - -	50792	- - - - >	PIVOT PLATE
22	4	<- - -	21176-0002	- - - - >	LOCKNUT, HEX 3/8"-16 SS

ITEM	QTY.	P/N - 60" CONVEYOR		P/N - 76" CONVEYOR	DESCRIPTION
23		SEE PAGES 12 & 13			ASSEMBLY, CONVEYOR MOTOR AND PICKUP (INC. ITEM 23A)
23A		SEE PAGES 12 & 13			PICKUP
24	1	<- - -	34128	- - - - >	SPROCKET, CONVEYOR DRIVE MOTOR, 20T (STANDARD SPEED) .317 BORE
24A	1	<- - -	38215	- - - - >	SPROCKET, 22T (HIGH SPEED) .314 BORE
25	1	<- - -	22159-0003	- - - - >	SPROCKET, SHAFT DRIVE SHAFT, 20T 5/8 BORE
26	1	50050		50052	ASSEMBLY, DRIVE CHAIN (INC. ITEM 26A)
26A	1	<- - -	3101212	- - - - >	MASTER LINK, DRIVE CHAIN
27	1	48851		50029	ASSEMBLY, CHAIN COVER-FOR OVENS WITH RIGHT-SIDE CONTROLS
28	1	50057		50059	BELT, CONVEYOR, 18"/457m STANDARD
28A	AR	<- - -	8500236	- - - - >	12" SECTION OF BELT
29	2	48707		48708	CRUMB PAN W/HOLES, ENTRANCE & EXIT
30	1	50044		50044	END STOP
31A	1	50040		50040	EXIT TRAY, 8"/203m
31B	1	50023		50023	EXIT TRAY, 20"/508m
32	1	50235		50235	PLATE MOTOR COVER ASSY
33	1	58391		58391	KIT, MASTER LINK
34A	1	30830		30830	SIDE STOP, LEFT

View of Split Belt Conveyor - Standard Speed (3-30 Minutes), High Speed (1-10 minutes)

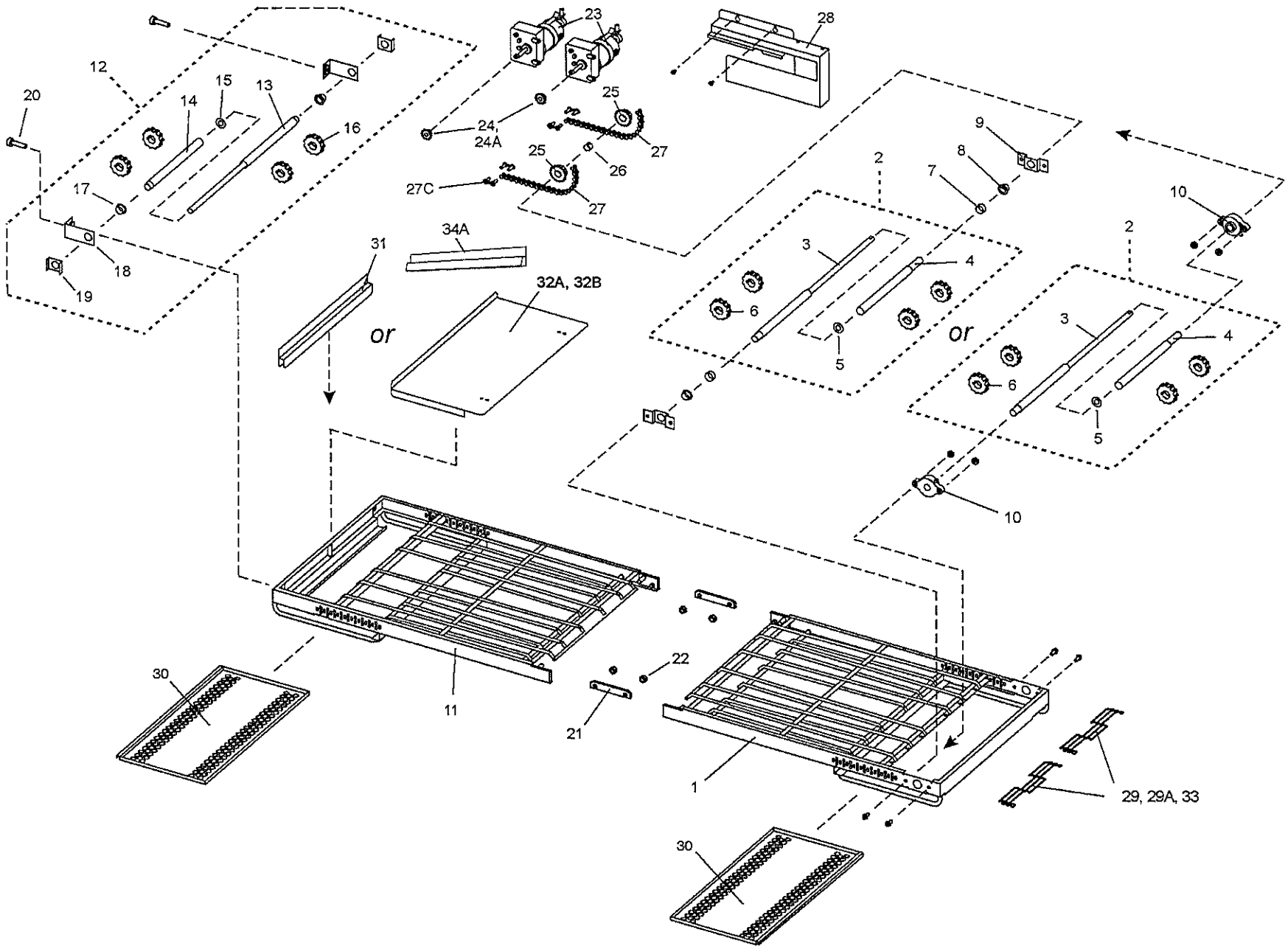

Parts for Split Belt Conveyor - Standard Speed (3-30 Minutes), High Speed (1-10 minutes)

ITEM	QTY.	P/N - 60" CONVEYOR		P/N - 76" CONVEYOR	DESCRIPTION
1	1	48847		48790	FRAME, DRIVE SIDE
2	1	<- - -	48759	- - - - >	ASSEMBLY SPLIT DRIVE SHAFT, STANDARD AND HIGH SPEED (INC. ITEMS 3-6)
3	1	<- - -	49969	- - - - >	SPLIT DRIVE SHAFT - MAIN 22.07"
4	1	<- - -	48837	- - - - >	SPLIT DRIVE SHAFT - SLEEVE 11.22"
5	1	<- - -	21415-0001	- - - - >	FLAT WASHER, BRONZE
6	4	<- - -	22229-0003	- - - - >	SPROCKET, CONV. BELT
7	2	<- - -	43275	- - - - >	SPACER (STANDARD SPEED ONLY)
8	2	<- - -	22034-0003	- - - - >	BUSHING, BRONZE 5/8" I.D. (STANDARD ONLY)
9	2	<- - -	49972	- - - - >	BRACKET, DRIVE SUPPORT (STANDARD ONLY)
10	2	<- - -	45377	- - - - >	FLANGE BEARING (HIGH SPEED ONLY)
11	1	48746		48795	FRAME, IDLER SIDE
12	1	<- - -	48769	- - - - >	ASSEMBLY, SPLIT IDLER SHAFT (INC. ITEMS 13-19)
13	1	<- - -	49968	- - - - >	SPLIT IDLER SHAFT - MAIN 20.12"
14	1	<- - -	48778	- - - - >	SPLIT IDLER SHAFT - SLEEVE 9.94"
15	1	<- - -	21415-0001	- - - - >	FLAT WASHER, BRONZE
16	4	<- - -	22229-0003	- - - - >	SPROCKET, CONV. BELT
17	2	<- - -	22034-0003	- - - - >	BUSHING, BRONZE 5/8" I.D.
18	2	<- - -	37000-0413	- - - - >	BRACKET, IDLER ADJUSTMT.
19	2	<- - -	54947	- - - - >	BRACKET, IDLER SUPPORT
20	2	<- - -	35000-1008	- - - - >	SCREW, IDLER ADJUSTMENT
21	2	<- - -	50792	- - - - >	PIVOT PLATE
22	4	<- - -	21176-0002	- - - - >	LOCKNUT, HEX 5/8"-16 SS
23		SEE PAGES 12 & 13			ASSEMBLY CONVEYOR MOTOR AND PICKUP (INC. ITEM 23A)

ITEM	QTY.	P/N - 60" CONVEYOR		P/N - 76" CONVEYOR	DESCRIPTION
23A	1	SEE PAGES 12 & 13			PICKUP
24	2	<- - -	34128	- - - - >	SPROCKET, CONVEYOR DRIVE MOTOR, 20T (STANDARD SPEED) .317 BORE
24A	2	<- - -	38215	- - - - >	SPROCKET, 22T (HIGH SPEED) .314 BORE
25	2	<- - -	22159-0003	- - - - >	SPROCKET, CONVEYOR DRIVE SHAFT, 20T (STANDARD AND HIGH SPEED)
26	1	<- - -	35900-0023	- - - - >	BUSHING, DRIVE SPROCKET
27A	1	50050		50053	ASSEMBLY, DRIVE CHAIN, REAR BELT (LONG - INC. ITEM 27C) 120"
27B	1	50051		50052	ASSEMBLY DRIVE CHAIN, FRONT BELT (SHORT - INC. ITEM 27C) 12"
27C	2	<- - -	3101212	- - - - >	MASTER LINK, DRIVE CHAIN
28	1	48851		50029	ASSEMBLY, CHAIN COVER
29	2	50056		50058	BELT, CONVEYOR, 9.229m STANDARD
29A	AR	<- - -	37022	- - - - >	12" SECTION OF BELT
30	2	48707		48708	CRUMB PAN, W/HOLES, ENTRANCE & EXIT
31	1	50044		50044	END STOP
32A	1	50040		50040	EXIT TRAY, 8.203m
32B	1	50023		50023	EXIT TRAY, 20.508m
33	1	<- - -	37020	- - - - >	KIT, MASTER LINK
34A	1	30830		30830	SIDE STOP, LEFT

BE2136

Standard Air finger configuration
NOTE: Left-to-Right configuration is shown.
For Right-to-Left conveyors, "mirror" the placement of the fingers.

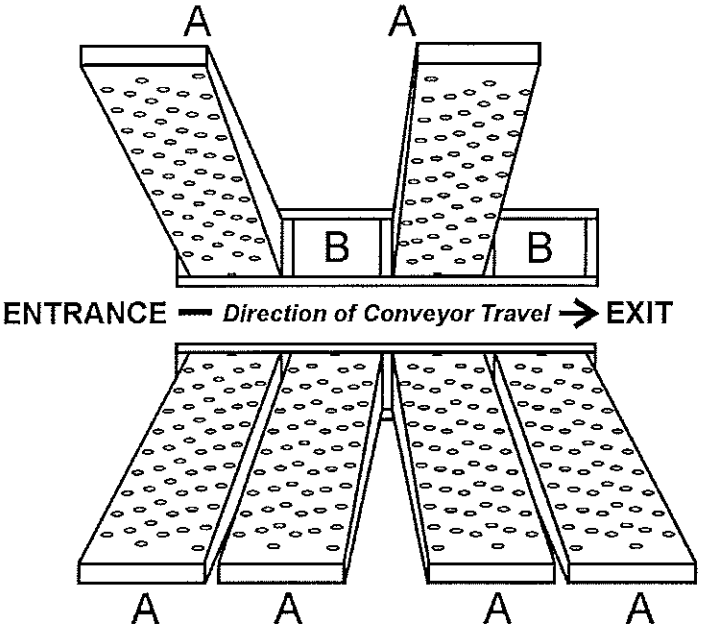

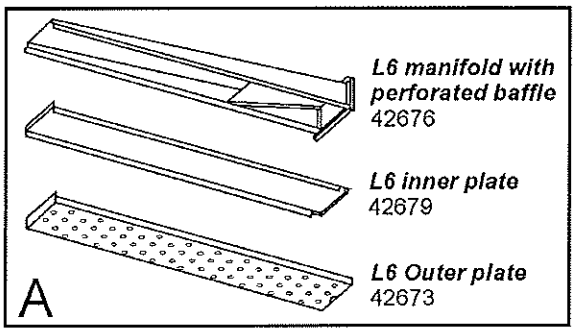

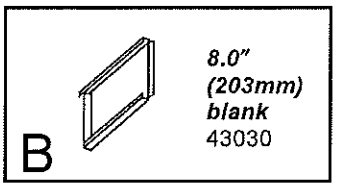

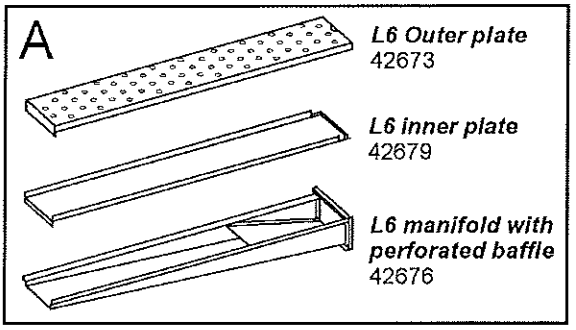

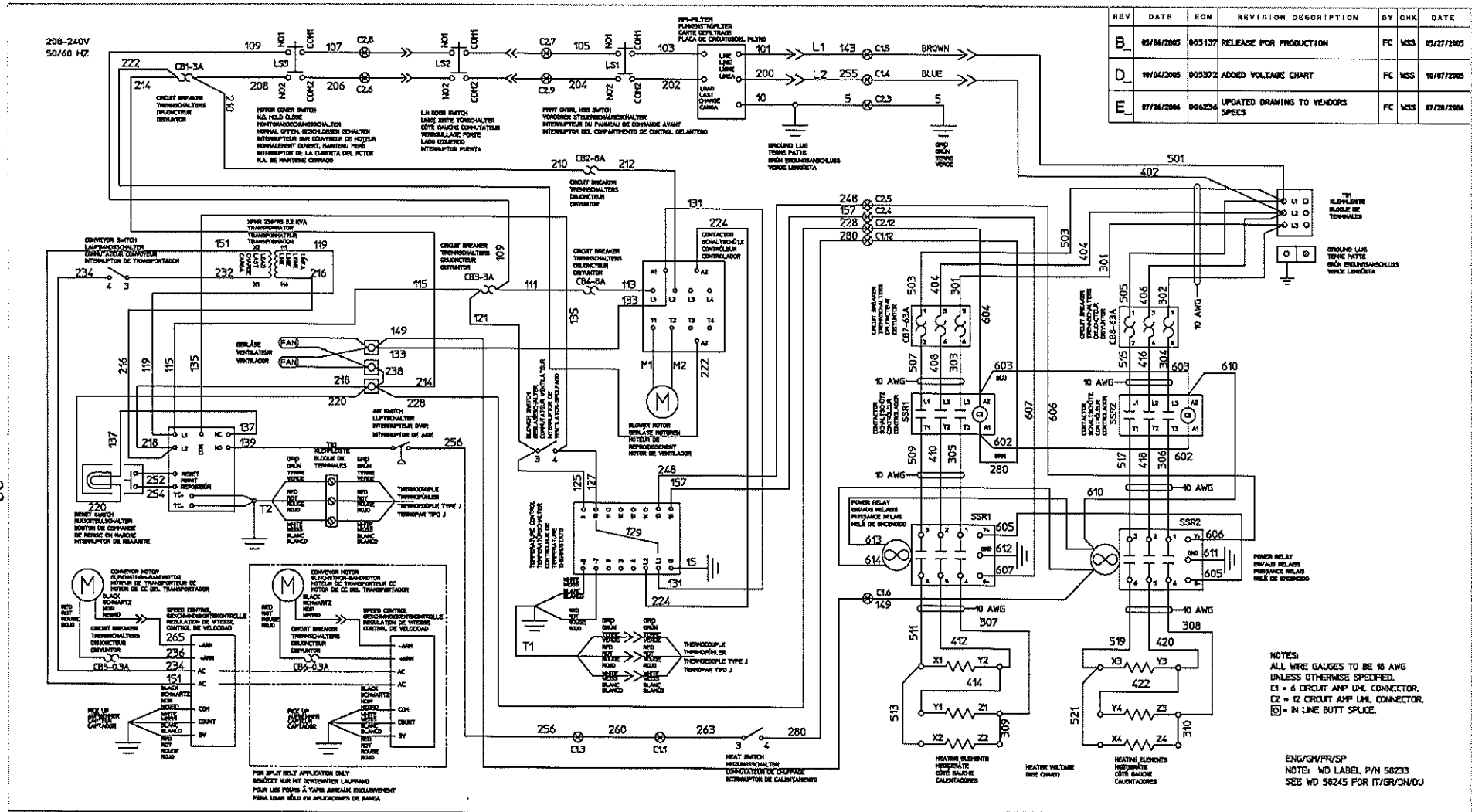

REV	DATE	ECN	REVISION DESCRIPTION	BY	CHK	DATE
B_	05/04/2005	005137	RELEASE FOR PRODUCTION	FC	WSS	05/27/2005
D_	10/04/2005	005372	ADDED VOLTAGE CHART	FC	WSS	10/07/2005
E_	07/26/2006	006236	UPDATED DRAWING TO VENDORS SPECS	FC	WSS	07/28/2006

VOLTAGE	TOTAL KILOWATTS	PHASE	L1	L2	L3
208	17.0	3	53.19	53.19	47.19
	23.5	3	71.2	71.2	65.2
240	17.0	3	46.9	46.9	40.9
	23.5	3	62.5	62.5	56.5

MATERIAL GAUGE:
FINISH
TOLERANCE UNLESS SPECIFIED
ANGLES ± 1.0°
DEC .X ±.020
.XX ±.015
.XXX ±.005

DRAWN FC 07/26/2006
CHECKED WSS 07/28/2006
APPROVED WSS 07/28/2006

BLODGETT®

WD, E208-240V 3PH BE2136

ALL DIMENSIONS ARE IN INCHES UNLESS OTHERWISE SPECIFIED. DO NOT SCALE DRAWING

PART NO 58214

SHT 1 OF 1

REV E_

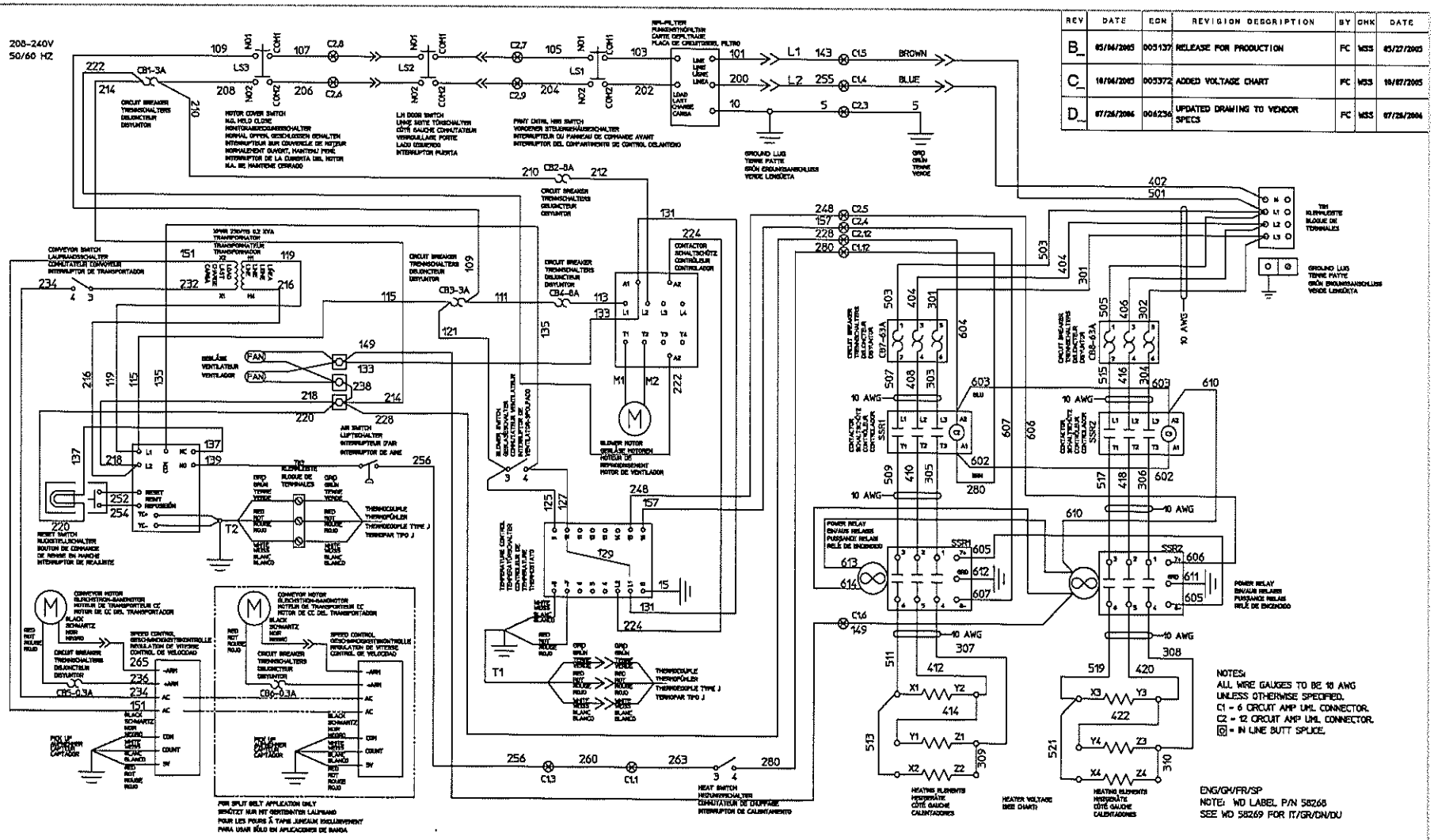

REV	DATE	ECN	REVISION DESCRIPTION	BY	CHK	DATE
B_	05/04/2005	005137	RELEASE FOR PRODUCTION	FC	WSS	05/27/2005
C_	10/04/2005	005372	ADDED VOLTAGE CHART	FC	WSS	10/07/2005
D_	07/26/2006	006256	UPDATED DRAWING TO VENDOR SPECS	FC	WSS	07/26/2006

VOLTAGE	TOTAL KILOWATTS	PHASE	L1	L2	L3	N
380	17.0	3	31.8	25.8	25.8	6.0
	23.5	3	41.7	35.7	35.7	6.0
480	17.0	3	26.5	20.5	20.5	6.0
	23.5	3	34.3	28.3	28.3	6.0

MATERIAL GAUGE:
FINISH
TOLERANCE UNLESS SPECIFIED
ANGLES ± 1.0°
DEC .X ±.030
.XX ±.015
.XXX ±.005

DRAWN FC 07/26/2006 | CHECKED WSS 07/28/2006 | APPROVED WSS 07/28/2006

BLODGETT®

WD, E380-480V 3PH BE2136 ENG

ALL DIMENSIONS ARE IN INCHES UNLESS OTHERWISE SPECIFIED. DO NOT SCALE DRAWING

PART NO 58267 | SHT 1 OF 1 | REV D_

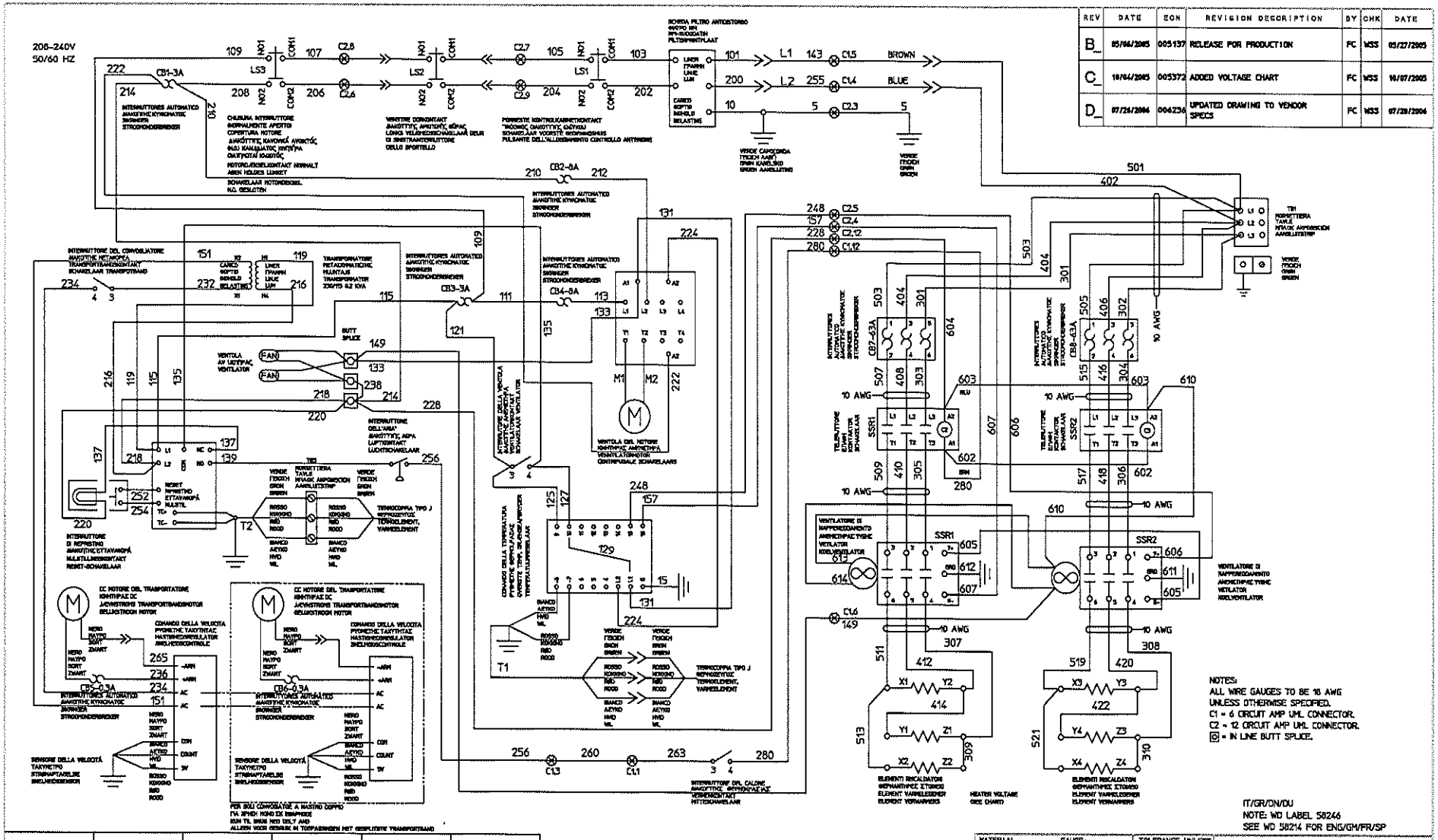

REV	DATE	ECN	REVISION DESCRIPTION	BY	CHK	DATE
B_	05/06/2005	005137	RELEASE FOR PRODUCTION	FC	WSS	05/27/2005
C_	10/04/2005	005372	ADDED VOLTAGE CHART	FC	WSS	10/07/2005
D_	07/26/2006	006236	UPDATED DRAWING TO VENDOR SPECS	FC	WSS	07/28/2006

VOLTAGE	TOTAL KILOWATTS	PHASE	L1	L2	L3
208	17.0	3	53.19	53.19	47.19
	23.5	3	71.2	71.2	65.2
240	17.0	3	46.9	46.9	40.9
	23.5	3	62.5	62.5	56.5

MATERIAL GAUGE:
FINISH
TOLERANCE UNLESS SPECIFIED
ANGLES ± 1.0°
DEC .X ±.030
.XX ±.015
.XXX ±.005

DRAWN FC 07/26/2006 | CHECKED WSS 07/28/2006 | APPROVED WSS 07/28/2006

BLODGETT®

WD, E208-240V 3PH BE2136

ALL DIMENSIONS ARE IN INCHES UNLESS OTHERWISE SPECIFIED. DO NOT SCALE DRAWING

PART NO 58245 | SHT 1 OF 1 | REV D_

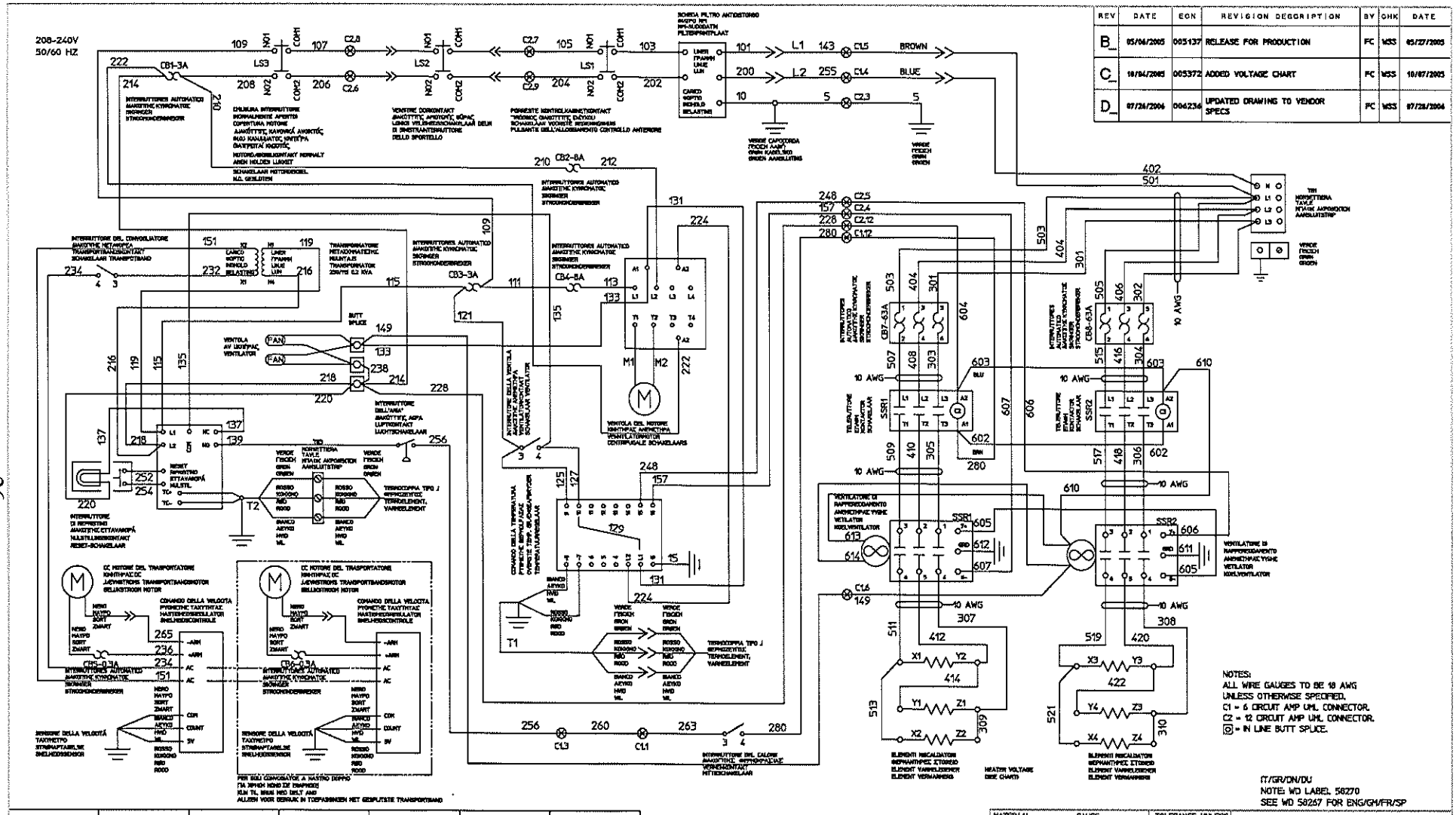

REV	DATE	ECN	REVISION DESCRIPTION	BY	CHK	DATE
B_	05/06/2005	005137	RELEASE FOR PRODUCTION	FC	WSS	05/27/2005
C_	10/04/2005	005372	ADDED VOLTAGE CHART	FC	WSS	10/07/2005
D_	07/26/2006	006236	UPDATED DRAWING TO VENDOR SPECS	FC	WSS	07/28/2006

VOLTAGE	TOTAL KILOWATTS	PHASE	L1	L2	L3	N
380	17.0	3	31.8	25.8	25.8	6.0
	23.5	3	41.7	35.7	35.7	6.0
480	17.0	3	26.5	20.5	20.5	6.0
	23.5	3	34.3	28.3	28.3	6.0

MATERIAL GAUGE:
FINISH
TOLERANCE UNLESS SPECIFIED
ANGLES ± 1.0°
DEC .X ±.030
.XX ±.015
.XXX ±.005
DRAWN FC 07/26/2006
CHECKED WSS 07/28/2006
APPROVED WSS 07/28/2006

BLODGETT®

WD, E380-480V 3PH BE2136

ALL DIMENSIONS ARE IN INCHES UNLESS OTHERWISE SPECIFIED. DO NOT SCALE DRAWING

PART NO 58269

SHT 1 OF 1

REV D_

REV	DATE	ECN	REVISION DESCRIPTION	BY	CHK	DATE
B_	05/26/2005	005137	RELEASE FOR PRODUCTION	PC	WSS	05/27/2005
C_	10/06/2005	005372	ADDED VOLTAGE CHART	PC	WSS	10/07/2005
D_	07/26/2006	006236	UPDATED DRAWING TO VENDOR SPECS	PC	WSS	07/28/2006

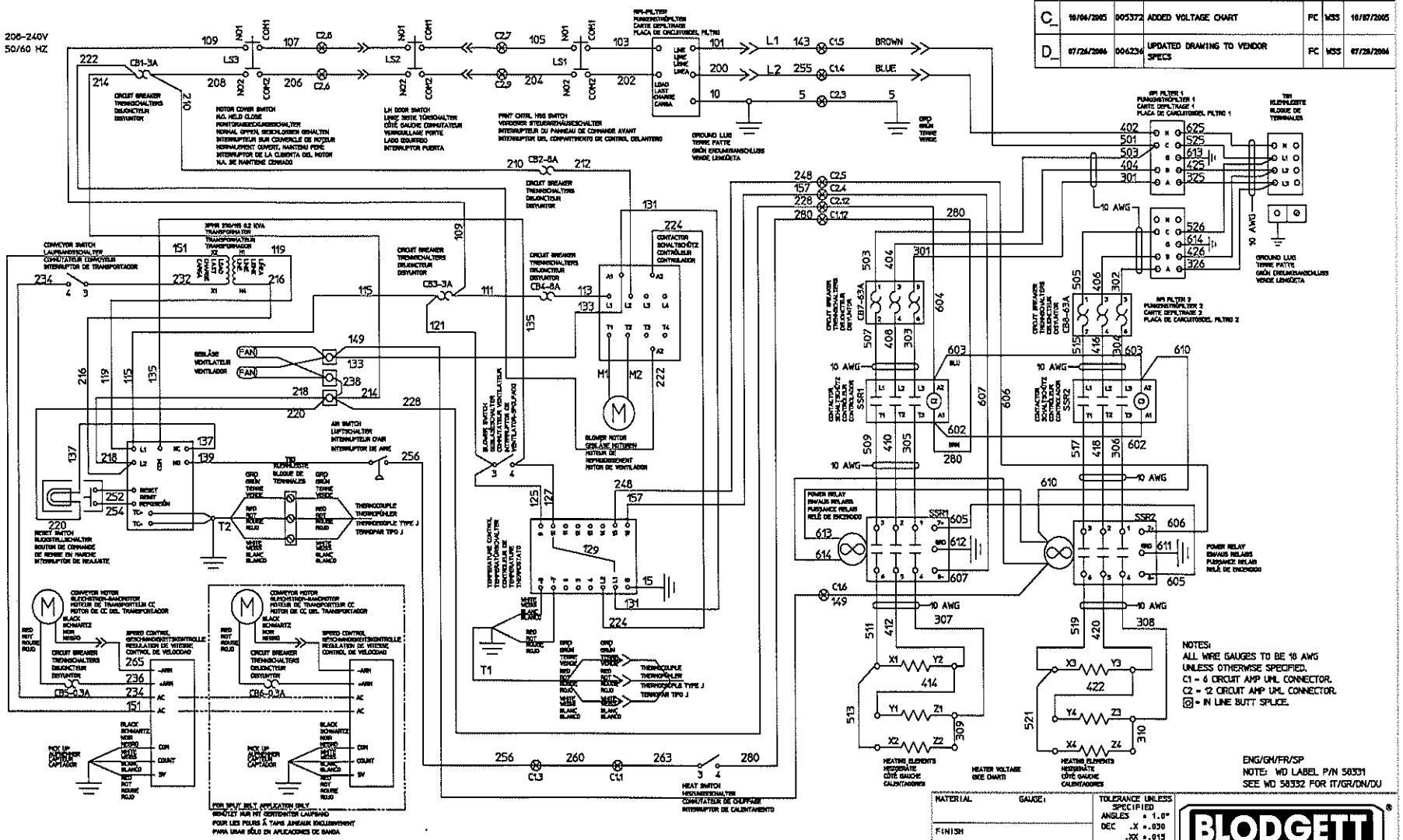

VOLTAGE	TOTAL KILOWATTS	PHASE	L1	L2	L3	N
380	17.0	3	31.8	25.8	25.8	6.0
	23.5	3	41.7	35.7	35.7	6.0

MATERIAL GAUGE:
FINISH
TOLERANCE UNLESS SPECIFIED: ANGLES ± 1.0°; DEC .X ±.030; .XX ±.015; .XXX ±.005

DRAWN PC 07/26/2006 | CHECKED WSS 07/28/2006 | APPROVED WSS 07/28/2006

BLODGETT®

WD, E380VCE 3PH BE2136 ENG

ALL DIMENSIONS ARE IN INCHES UNLESS OTHERWISE SPECIFIED. DO NOT SCALE DRAWING

PART NO 58330 | SHT 1 OF 1 | REV D_

REV	DATE	ECN	REVISION DESCRIPTION	BY	CHK	DATE
B_	05/24/2005	005137	RELEASE FOR PRODUCTION	FC	WSS	05/27/2005
C_	10/04/2005	005372	ADDED VOLTAGE CHART	FC	WSS	10/07/2005
D_	07/26/2006	006236	UPDATED DRAWING TO VENDOR SPECS	FC	WSS	07/28/2006

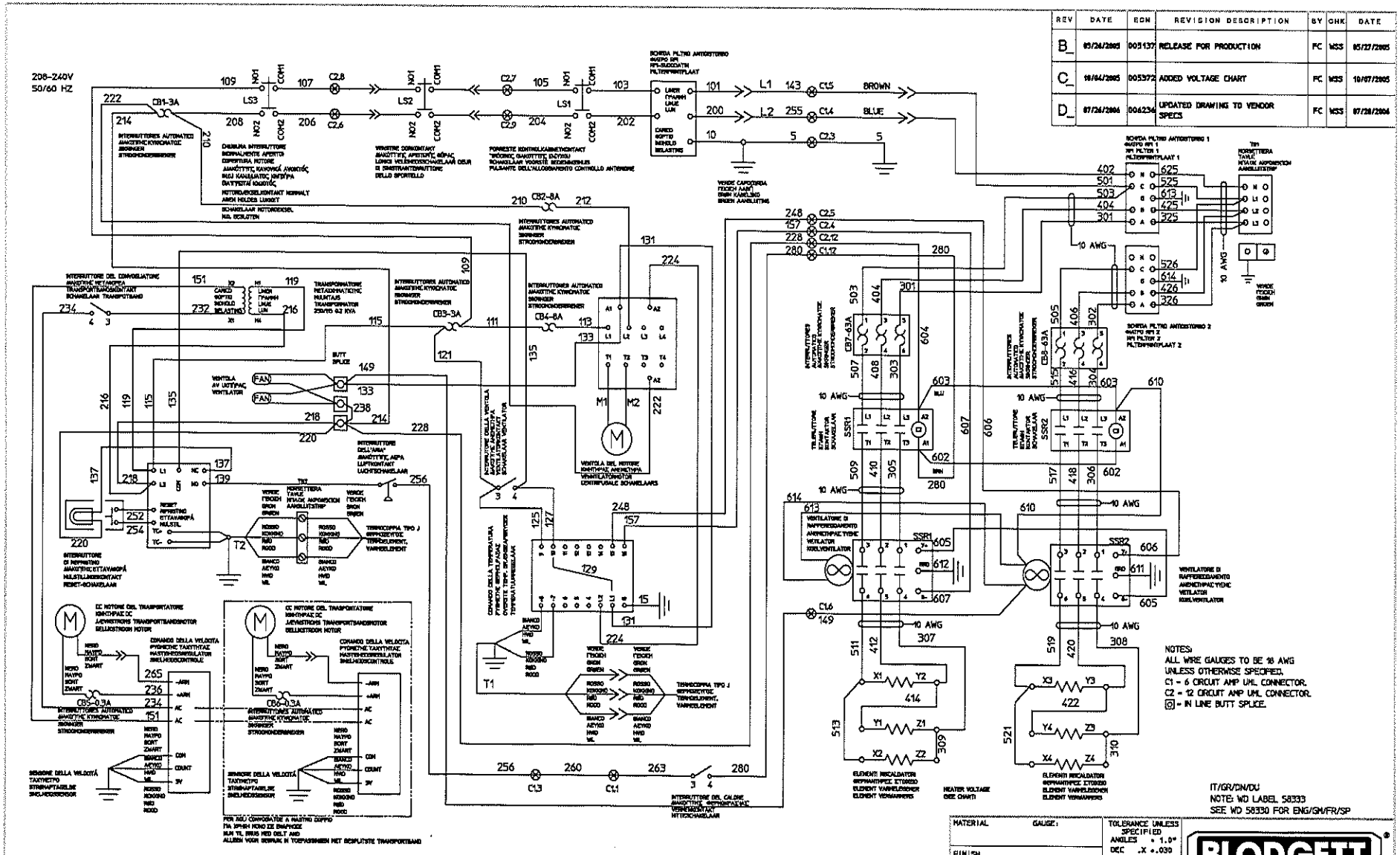

VOLTAGE	TOTAL KILOWATTS	PHASE	L1	L2	L3	N
380	17.0	3	31.8	25.8	25.8	6.0
	23.5	3	41.7	35.7	35.7	6.0

MATERIAL	GAUGE:	TOLERANCE UNLESS SPECIFIED
FINISH		ANGLES ± 1.0° DEC .X ±.030 .XX ±.015 .XXX ±.005
DRAWN FC 07/26/2006	CHECKED WSS 07/28/2006	APPROVED WSS 07/28/2006

BLODGETT

WD, E380VCE 3PH BE2136

ALL DIMENSIONS ARE IN INCHES UNLESS OTHERWISE SPECIFIED. DO NOT SCALE DRAWING	PART NO 58332	SHT 1 OF 1	REV D_