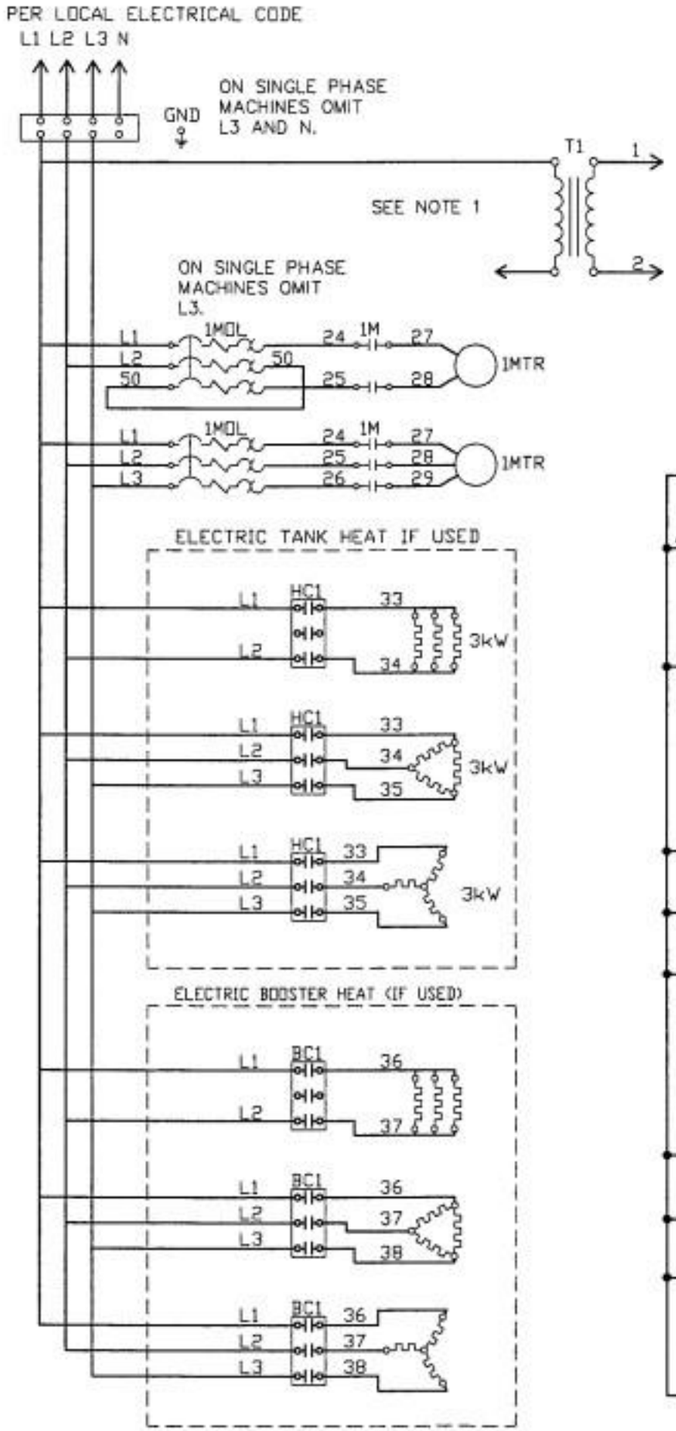

NOTE 1:
CONNECT TO L2 IF 220/1, CONFIGURE XFMR TAPS FOR 220
CONNECT TO L2 IF 220/3, CONFIGURE XFMR TAPS FOR 220
CONNECT TO N IF 380-415/3, CONFIGURE XFMR TAPS FOR 220
CONNECT TO L2 IF 440/3, CONFIGURE XFMR TAPS FOR 440

NOTE 2: USED ON INDEPENDENT FRONT DOOR MACHINES.

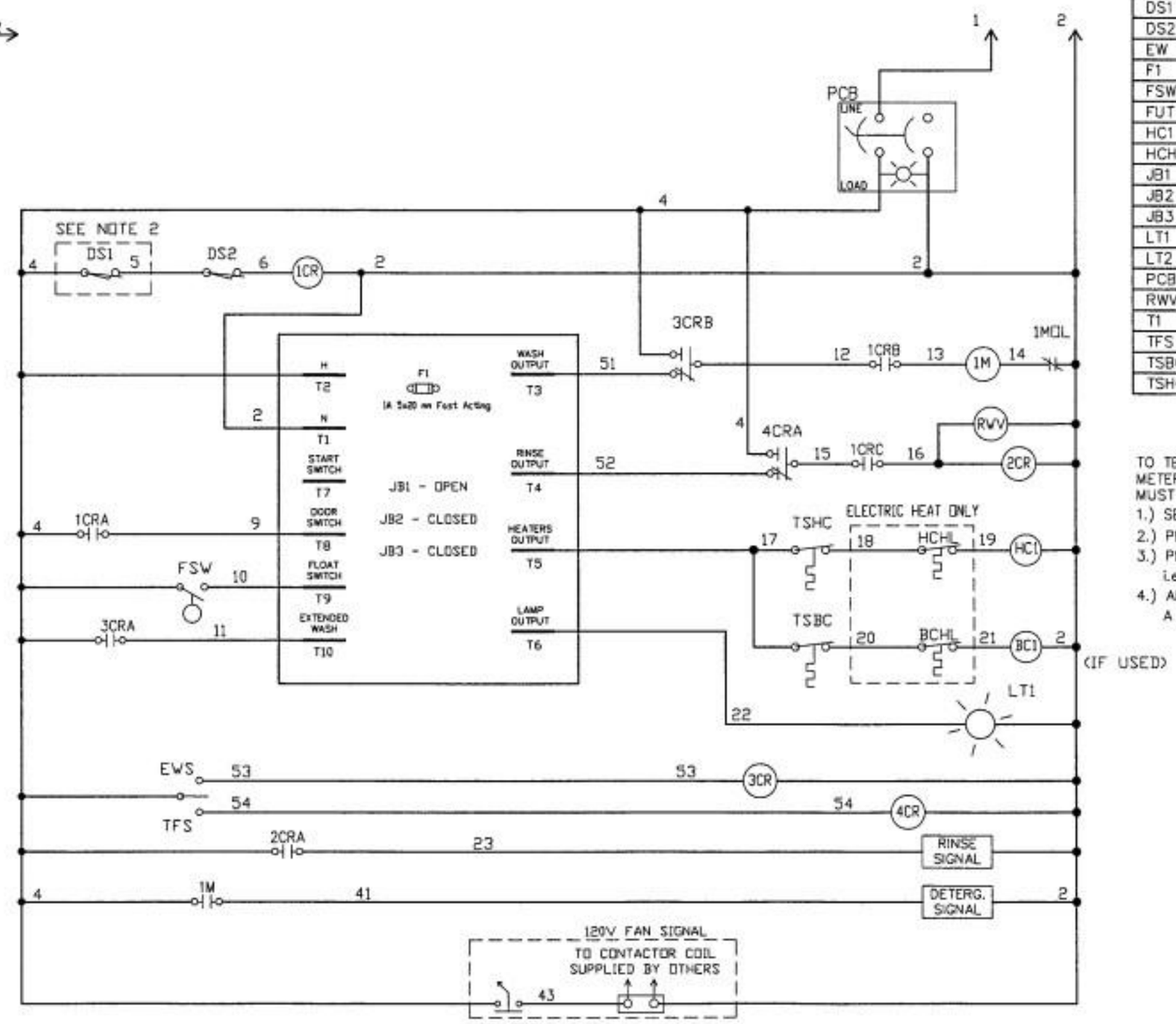

1CR	DOOR SWITCH RELAY
2CR	RINSE AID SIGNAL RELAY
3CR	EXTENDED WASH RELAY
4CR	TANK FILL RELAY
1M	WASH MOTOR CONTACTOR
1MOL	WASH MOTOR OVERLOAD
1MTR	WASH MOTOR
BC1	BOOSTER TANK CONTACTOR OR STEAM VALVE
BCHL	BOOSTER TANK HIGH LIMIT
DS1	DOOR SAFETY SWITCH, FRONT DOOR
DS2	DOOR SAFETY SWITCH, SIDE DOORS
EW	EXTENDED WASH SWITCH
F1	TIMER BOARD FUSE
FSW	FLOAT SWITCH
FUT	TRANSFORMER FUSES
HC1	TANK HEAT CONTACTOR OR STEAM VALVE
HCHL	TANK HEAT HIGH LIMIT
JB1	RINSE TIME SELECT JUMPER
JB2	CYCLE SELECT JUMPER
JB3	CYCLE SELECT JUMPER
LT1	POWER ON LIGHT
LT2	CYCLE LIGHT
PCB	POWER SWITCH/CIRCUIT BREAKER
RWV	RINSE WATER VALVE
T1	LINE:120V TRANSFORMER
TFS	TANK FILL SWITCH
TSBC	BOOSTER TANK THERMOSTAT
TSHC	WASH TANK THERMOSTAT

TO TEST INPUTS T7, T8, T9, AND T10 A METER CAPABLE OF READING DC VOLTAGES MUST BE USED.
1.) SET METER TO READ DC VOLTAGE
2.) PLACE BLACK LEAD TO T2
3.) PLACE RED LEAD TO TERMINAL BEING TESTED
i.e. PLACE RED LEAD TO T8 TO TEST DOOR SW.
4.) AN OPEN SWITCH WILL READ 4.7-5.3VDC
A CLOSED SWITCH WILL READ 0-1VDC

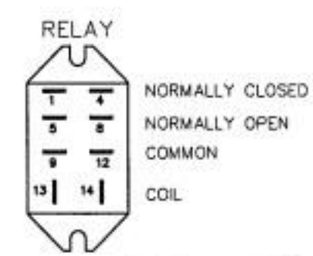

DIAGRAM STATE
POWER OFF
DOORS CLOSED
TANKS EMPTY
END OF CYCLE

B701721