CookTek®

OWNER'S MANUAL

INDUCTION SINGLE HOBS, DOUBLE HOBS, AND WOKS

TABLE OF CONTENTS

1. REVISION HISTORY 5
2. IMPORTANT SAFETY INSTRUCTIONS 6
   - 2.1 General Safety Information 6
   - 2.2 Air Flow and Ambient Temperature 8
   - 2.3 Reducing Fire Risk 8
   - 2.4 Warranty 8
   - 2.5 Grounding Instructions 8
   - 2.6 Power Cord Replacement 9
   - 2.7 Protective Earth (Ground) Symbol 9
   - 2.8 Equipotential Bonding Symbol 9
   - 2.9 Approved For Commercial Use 9
3. SPACING REQUIREMENTS 10
4. SPECIFICATIONS 11
   - 4.1 Freestanding Unit Dimensions 11
   - 4.2 Drop-In Unit Dimensions 15
   - 4.2.1 Drop-in Single Hob Cutout Dimensions 16
   - 4.2.1 Drop-in Double Hob, Front to Back Cutout Dimensions 18
   - 4.2.1 Drop-in Side to Side Double Hob Cutout Dimensions 20
   - 4.2.2 Drop-in Woks Cutout Dimensions 22
5. DROP-IN COOKTOP AND WOK INSTALLATION 23
6. HELIOS STANDARD (NON-TOUCH DISPLAY) 24
   - 6.1 Power Mode 25
   - 6.2 Helios Standard Cooktop - Temperature Mode 26
   - 6.3 Helios Standard Wok Operation 26
7. HELIOS TOUCH 27
   - 7.1 Power Mode 27
   - 7.2 Helios Touch Cooktop - Temperature Mode 28

2801 Trade Center Drive
Carrollton, Texas 75007
cooktek.com

7.3 Helios Touch Wok Operation 29
8. DOUBLE HOB COOKTOPS OPERATION 30
9. CLEANING AND MAINTENANCE 31
9.1 Grease Filter Maintenance 31
10. TROUBLESHOOTING 32
11. ERROR CODES 34
12. WARRANTY 36

2801 Trade Center Drive
Carrollton, Texas 75007
cooktek.com

For further information, call

800.908.8726

or

+1 214.379.6000

2801 Trade Center Drive
Carrollton, Texas 75007
cooktek.com

1. REVISION HISTORY

Revision	Revision Date	By	Revision Description
A	30-Dec-25	BA	• New template, updated version DOC-1868 Rev B • Added information for 400 VAC version

2801 Trade Center Drive
Carrollton, Texas 75007
cooktek.com

2. IMPORTANT SAFETY INSTRUCTIONS

This manual provides essential information for the installation, operation, cleaning, and maintenance of CookTek Helios freestanding and drop-in induction cooktops and woks, including single-hob, double-hob, and wok configurations in both Standard and Touch models. This document ensures the equipment is used correctly, safely, and in accordance with applicable regulatory, electrical, and commercial kitchen standards. Information and specifications are subject to change without notice. Retain for future reference.

⚠️ **WARNINGS:**

- **When operating this oven, strictly adhere to the following safety precautions to reduce the risk of burns, electric shock, fire, injury, or damage to the cooktop or property near the cooktop.**
- **This appliance has hot surfaces! During use, the accessible parts of the cooktop can become very hot.**

2.1 General Safety Information

Each installation site has unique electrical wiring. Since numerous local codes may apply, it is the owner's and installer's responsibility to comply with them. CookTek is not liable for any consequential damage resulting from failure to meet installation requirements.

- Always unplug the appliance immediately after use and allow for cooling time if handling, transporting, or storing.
- Turn off the cooktop/wok after each use.
- To disconnect the appliance, turn off the unit completely by pressing the power button, pressing Power Off, then removing the plug from the outlet.
- Never heat empty cookware. Doing so may damage the unit or the cookware or cause it to overheat.
- If overheating happens, an error code will flash on the display, and the unit will shut itself off automatically. When the temperature returns to normal, the unit can be used again.
- If the power is ON, the appliance will heat continuously. The cookware will be hot; exercise caution when working on or near the appliance.
- Drop-in CookTek cooktops and woks come with a stand-alone (not built-in) control box for unit operation. Use ONLY the control box that comes with the unit to avoid any possible operational hazards.
- The cooktops/woks are designed to work with CookTek's recommended induction-compatible cookware only.
- Users wearing a pacemaker should consult their doctor or the pacemaker manufacturer prior to operating CookTek induction equipment. The electromagnetic field may interfere with the pacemaker's proper function.
- Metallic objects such as kitchen utensils, knives, spoons, etc., should not be placed on the appliance. Use caution when wearing rings, watches, and other metallic objects, as they may get hot if placed near the unit's surface.
- Remove the cooktop carefully from the carton.

2801 Trade Center Drive
Carrollton, Texas 75007
cooktek.com

- Remove all loose packaging and accessories and keep them for future shipment or in case of concealed shipping damage.
- Any installation that does not follow the specifications outlined in this manual automatically voids the product's warranty.
- CookTek requires a dedicated electrical line to be used for each cooktop installed.
- Electrical circuits should not be shared with any other electrical equipment.
- Maximum allowable line voltage is 132 VAC for 100–120 VAC units, 265 VAC for 200–240 VAC units, and 430 VAC for 380–415 VAC units. Exceeding these limits may damage the equipment.
- Always provide a dedicated electrical circuit for the equipment.
- Place the unit on a dry, level, rigid, stable, and non-flammable surface.
- Keep the unit away from other heat sources.

  Note: Refer to the Spacing Requirements section for spacing and clearance information for all cooktop units.
- Review the Cleaning and Maintenance section if your unit is equipped with a grease filter on the bottom.
- All units should be checked for build-up and debris around the intake and exhaust vents on the bottom of the unit.
- Unplug the unit and clean any debris from the vents with a dry cloth to ensure proper airflow to the equipment.

DO NOT perform the following:

- ✗ Use the cooktop/wok surface for storage purposes
- ✗ Use the cooktop/wok for anything other than its intended use as described in this manual. This unit is designed to heat food and is not intended for laboratory or industrial use
- ✗ Use any accessories or attachments that the manufacturer does not recommend. Use of unapproved accessories may cause injuries and void the warranty.
- ✗ Use any appliance that has a damaged cord or plug, or one that has malfunctioned or been damaged.
- ✗ Let the power cord touch hot surfaces or hang over the edge of the counter.
- ✗ Move the appliance when electric power is connected.
- ✗ Immerse cords, plugs, or the appliance in water.
- ✗ Put food or unopened cans on the cooktop/wok surface.
- ✗ Leave the appliance unattended while in use.
- ✗ Place aluminum foil or plastic objects on the cooktop/wok surface.
- ✗ Use the cooktop/wok near a faucet, swimming pool, sink, or other areas where water can be found. Never store the unit upside down or in a non-climate-controlled environment.
- ✗ Obstruct, block, or alter openings or holes in the cooktop/wok housing.
- ✗ Stick foreign objects into these openings.
- ✗ Use a water jet to clean the appliance.

2.2 Air Flow and Ambient Temperature

- Avoid ambient temperatures exceeding 122 °F (50 °C).
- For drop-in units, the following minimum airflow must be provided:
  - Single units require a minimum of 70 CFM (2.0 m3/min) of fresh air to the unit
  - Double units require a minimum of 140 CFM (4.0 m3/min) of fresh air to the unit

2.3 Reducing Fire Risk

- In the unlikely event of a grease fire, smother flame by covering cookware with a tight-fitting lid, cookie sheet, or flat tray. DO NOT USE WATER. When the fire is under control, turn off the appliance and unplug it from the wall.
- Keep the cooktop/wok away from metallic surfaces, gas and electric ranges, and open flames.

2.4 Warranty

Visit cooktek.com/warranty-service for CookTek Warranty information.

- This product may only be serviced by an authorized service agent or by CookTek personnel. Do not attempt to open the unit or perform any service. For service information, contact CookTek at +1 (214) 379-6000.
- Throwing or dropping the unit can damage the internal components or crack it, voiding your warranty.
- If the cooktop/wok becomes cracked, unplug the unit immediately and do not use it

2.5 Grounding Instructions

The cooktop must be properly grounded. In the event of an electrical short circuit, grounding reduces the risk of electric shock by providing a safe path for the electric current to flow. The cooktop has a power cord with a 3-prong grounding plug, which must be used in a compatible and properly grounded outlet. It is the owner's responsibility to replace any 2-prong wall outlet with a properly grounded 3-prong wall receptacle. For your safety, never cut, remove, or disable the electrical (ground) connection from the plug. Never use an adapter plug or an extension cord with the cooktop.

⚠️ **WARNING: Improper grounding can result in risk of electric shock.**

Some units may come equipped with a removable IEC power cord. Ensure this power cord is firmly attached to your CookTek unit before plugging the unit into the power receptacle and attempting operation.

- ✗ Do not use an extension cord. If the power cord is too short, have a qualified electrician or serviceman install an outlet near the appliance.

2801 Trade Center Drive
Carrollton, Texas 75007
cooktek.com

2.6 Power Cord Replacement

If the power cord is damaged, it must be replaced by the manufacturer, its service agent, or a similarly qualified person.

⚠ WARNING: If the oven is unplugged during service or maintenance, the user must be able to always access and see the plug to ensure that the oven remains unplugged. The plug must remain near the oven and cannot be placed behind another appliance or in another room.

2.7 Protective Earth (Ground) Symbol

This symbol identifies the terminal intended for connecting an external conductor to protect against electric shock in case of a fault, or the terminal of a protective earth (ground) electrode.

2.8 Equipotential Bonding Symbol

This symbol identifies the terminals which, when connected, bring the various parts of an equipment or of a system to the same potential, not necessarily being the earth (ground) potential, e.g., for local bonding.

2.9 Approved For Commercial Use

CookTek Helios induction appliances are certified to UL 197 and CSA C22.2 commercial cooking standards and comply with applicable requirements of the European Economic Area (EEA), bearing the CE mark to indicate conformity. These certifications confirm that the equipment is approved for commercial food service applications.

2801 Trade Center Drive
Carrollton, Texas 75007
cooktek.com

3. SPACING REQUIREMENTS

- All units require a minimum clearance of 2” (51 mm) between all sides of the housing and any surface or obstacle.

If	Then
The unit is being placed near a grill or stove	A divider must exist between the unit and the open heat source, with a minimum of 6” (153 mm) between the unit and the divider.
The unit is placed near a fryer	A divider must exist between the unit and the fryer, with a minimum of 12” (305 mm) between the unit and the divider.

- All drop-in units require a minimum clearance of open space below the unit of 6” (152 mm). The space must have openings that allow cool air (ambient temperature not to exceed 122 °F (50 °C)) to flow to the cooktop housing intake vents. If either the air intake or the exhaust outlet is blocked, the internal temperature will rise, triggering an error code.

  Note: The 6” (152 mm) can be reduced if additional fans and ducting are added to provide forced ventilation.
- Do not install the unit near other equipment that generates excessive heat or grease that can be pulled into the CookTek unit by its fan (i.e., griddles, fryers, etc.).
- Do not place the unit near items that generate excessive steam that can be pulled into the CookTek unit by its fan (i.e., pasta cookers, steam baths, dishwashers, etc.).

2801 Trade Center Drive
Carrollton, Texas 75007
cooktek.com

4. SPECIFICATIONS

4.1 Freestanding Unit Dimensions

- **Freestanding Single Hob, Helios Standard**
  - HRF-9500-SH18-1
  - HRF-9500-SH25-1
  - HRF-9500-SH35-1

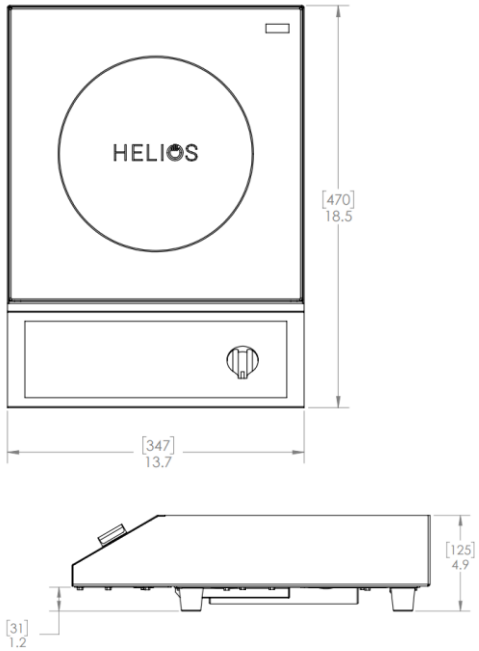

HELIOS STANDARD FREESTANDING SINGLE HOB		
Full Unit Height	4.9”	125 mm
Full Unit Width	13.7”	347 mm
Full Unit Depth	18.5”	470 mm
Feet Height	1.2”	31 mm
Weight	19 lb	8.6 kg
Max Ambient Temperature	122 °F	50 °C

- **Freestanding Single Hob, Helios Touch**
  - HTF-9500-SH18-1
  - HTF-9500-SH25-1
  - HTF-9500-SH35-1

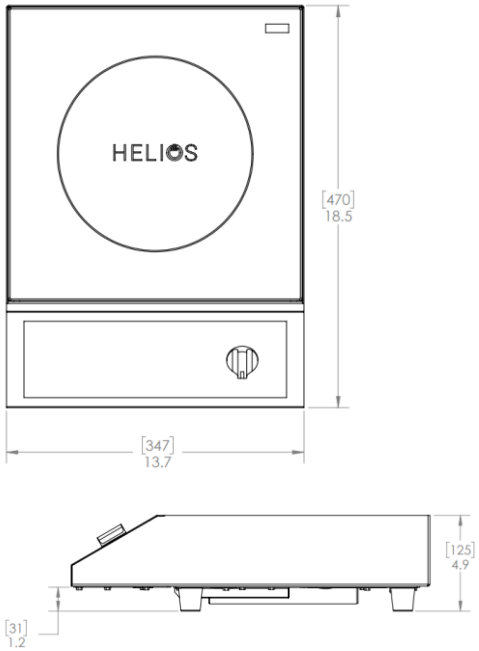

HELIOS TOUCH FREESTANDING SINGLE HOB		
Full Unit Height	4.9”	125 mm
Full Unit Width	13.7”	347 mm
Full Unit Depth	18.5”	470 mm
Feet Height	1.2”	31 mm
Weight	19 lb	8.6 kg
Max Ambient Temperature	122 °F	50 °C

2801 Trade Center Drive
Carrollton, Texas 75007
cooktek.com

- **Freestanding Double Hob, Helios Standard, Front to Back**
  - HRF-9500-FB25-1
  - HRF-9500-FB35-1

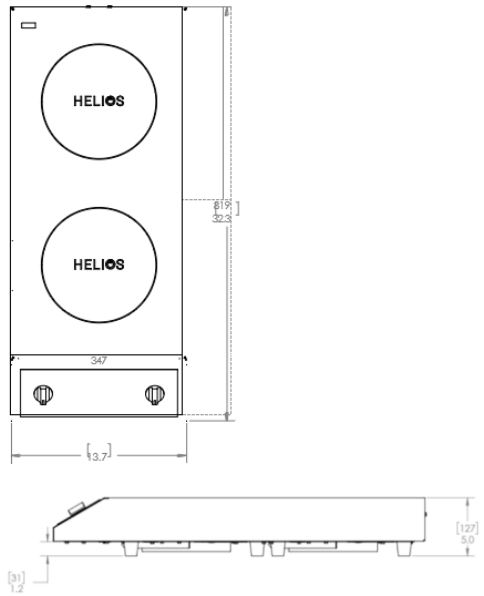

HELIOS STANDARD FREESTANDING DOUBLE HOB FRONT TO BACK		
Full Unit Height	5”	127 mm
Full Unit Width	13.7”	347 mm
Full Unit Depth	32.3”	819 mm
Feet Height	1.2”	31 mm
Weight	31 lb	14 kg
Max Ambient Temperature	122 °F	50 °C

- **Freestanding Double Hob, Helios Touch, Front to Back**
  - HTF-9500-FB25-1
  - HTF-9500-FB35-1

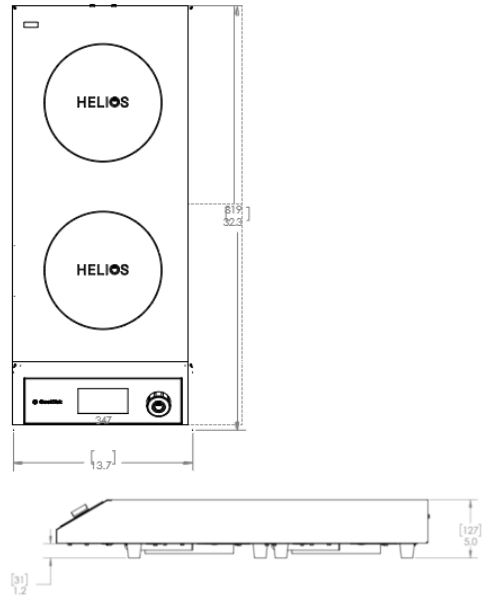

HELIOS TOUCH FREESTANDING DOUBLE HOB FRONT TO BACK		
Full Unit Height	5”	127 mm
Full Unit Width	13.7”	347 mm
Full Unit Depth	32.3”	819 mm
Feet Height	1.2”	31 mm
Weight	31 lb	14 kg
Max Ambient Temperature	122 °F	50 °C

2801 Trade Center Drive
Carrollton, Texas 75007
cooktek.com

- **Freestanding Double Hob, Helios Standard, Side to Side**
  - HTF-9500-SS25-1
  - HTF-9500-SS35-1

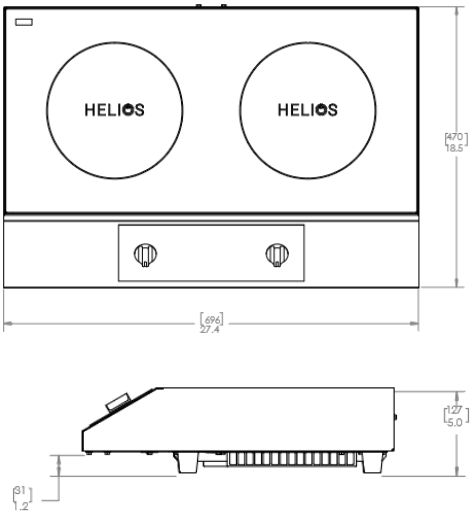

HELIOS STANDARD FREESTANDING DOUBLE HOB SIDE TO SIDE		
Full Unit Height	5”	127 mm
Full Unit Width	27.4”	696 mm
Full Unit Depth	18.5”	470 mm
Feet Height	1.2”	31 mm
Weight	31 lb	14 kg
Max Ambient Temperature	122 °F	50 °C

- **Freestanding Touch Hob, Helios Standard, Side to Side**
  - HRF-9500-SS25-1
  - HRF-9500-SS35-1

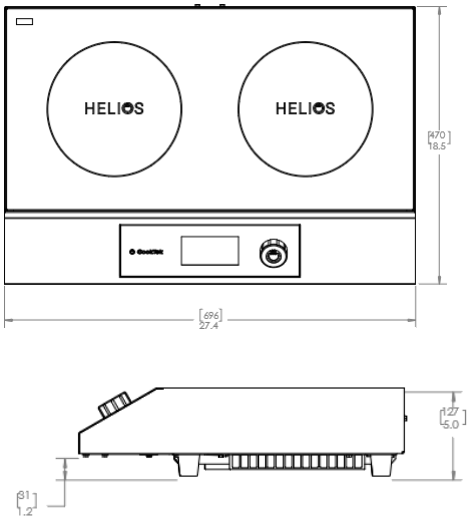

HELIOS TOUCH FREESTANDING DOUBLE HOB SIDE TO SIDE		
Full Unit Height	5”	127 mm
Full Unit Width	27.4”	696 mm
Full Unit Depth	18.5”	470 mm
Feet Height	1.2”	31 mm
Weight	31 lb	14 kg
Max Ambient Temperature	122 °F	50 °C

2801 Trade Center Drive
Carrollton, Texas 75007
cooktek.com

- **Freestanding Wok, Helios Standard**
  - HRF-9500-WK18-1
  - HRF-9500-WK25-1
  - HRF-9500-WK35-1

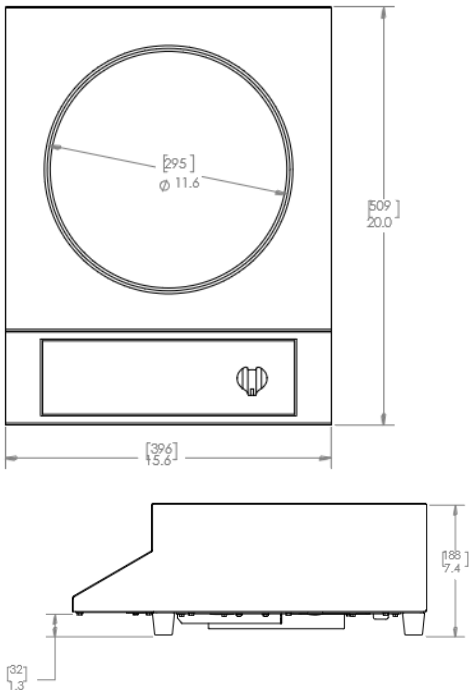

HELIOS STANDARD FREESTANDING WOK		
Full Unit Height	7.4”	188 mm
Full Unit Width	15.6”	396 mm
Full Unit Depth	20”	509 mm
Feet Height	1.3”	32 mm
Weight	22 lb	8.6 kg
Max Ambient Temperature	122 °F	50 °C

- **Freestanding Wok, Helios Touch**
  - HTF-9500-WK18-1
  - HTF-9500-WK25-1
  - HTF-9500-WK35-1

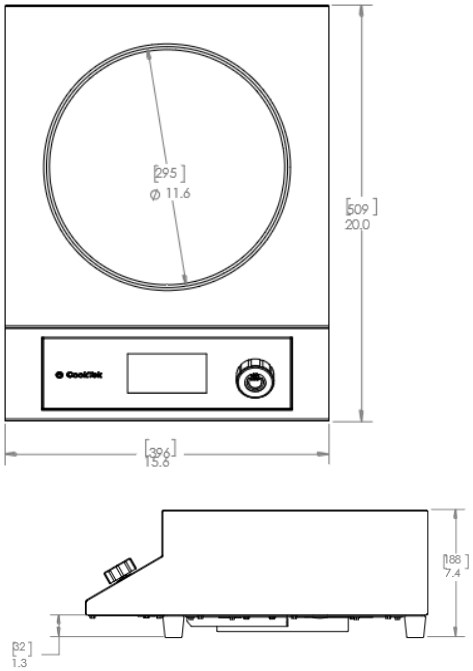

HELIOS STANDARD FREESTANDING WOK		
Full Unit Height	7.4”	188 mm
Full Unit Width	15.6”	396 mm
Full Unit Depth	20”	509 mm
Feet Height	1.3”	32 mm
Weight	22 lb	8.6 kg
Max Ambient Temperature	122 °F	50 °C

2801 Trade Center Drive
Carrollton, Texas 75007
cooktek.com

4.2 Drop-In Unit Dimensions

- **Drop-in Single Hob, Helios Standard**
  - HRD-9500-SH18-1
  - HRD-9500-SH25-1
  - HRD-9500-SH35-1

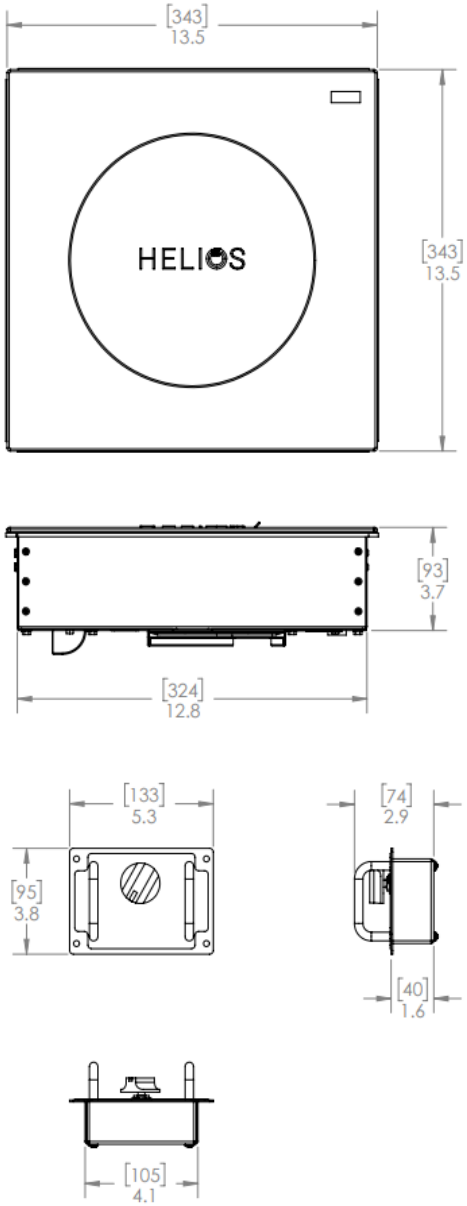

HELIOS STANDARD DROP-IN SINGLE HOB		
Full Unit Height	3.7”	93 mm
Full Unit Width	13.5”	343 mm
Housing Width	12.8”	324 mm
Full Unit Depth	13.5”	343 mm
Housing Depth	12.8”	324mm
Cutout Width	13.13”	334 mm
Cutout Depth	13.13”	334 mm
Weight	15 lb	6.8 kg
Max Ambient Temperature	122 °F	50 °C

2801 Trade Center Drive
Carrollton, Texas 75007
cooktek.com

4.2.1 Drop-in Single Hob Cutout Dimensions

Top Mount

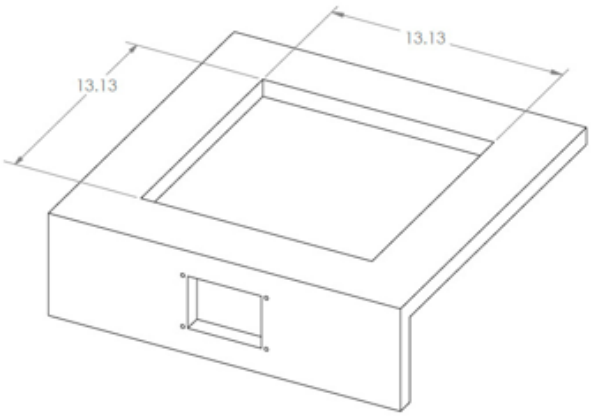

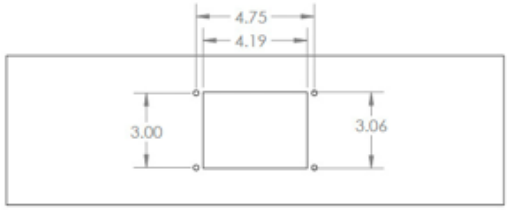

Flush Mount

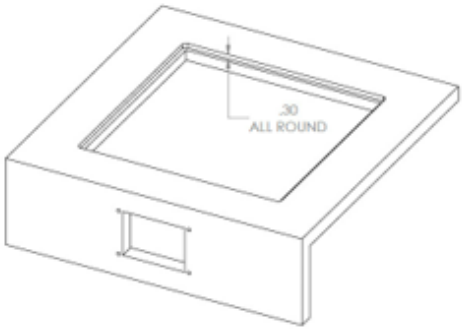

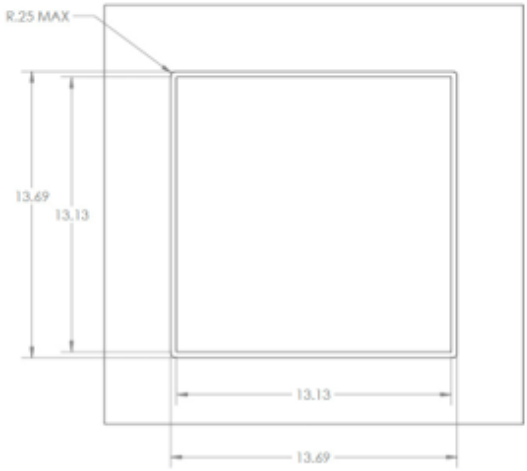

SPECIFICATIONS

2801 Trade Center Drive
Carrollton, Texas 75007
cooktek.com

- **Drop-in Double Hob, Front to Back, Helios Standard**
  - HRD-9500-FB25-1
  - HRD-9500-FB35-1

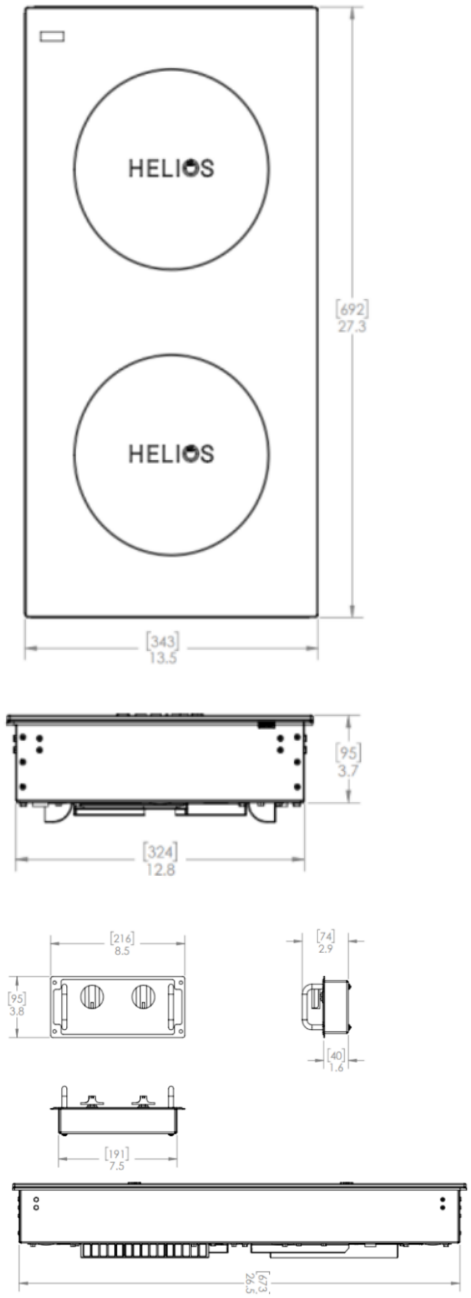

HELIOS STANDARD DROP-IN DOUBLE HOB FRONT TO BACK		
Full Unit Height	3.7”	95 mm
Full Unit Width	13.5”	343 mm
Housing Width	12.8”	324 mm
Full Unit Depth	27.3”	692 mm
Housing Depth	26.5”	673 mm
Cutout Width	13.13”	334 mm
Cutout Depth	26.88”	683 mm
Weight	30 lb	13.6 kg
Max Ambient Temperature	122 °F	50 °C

2801 Trade Center Drive
Carrollton, Texas 75007
cooktek.com

4.2.1 Drop-in Double Hob, Front to Back Cutout Dimensions

Top Mount

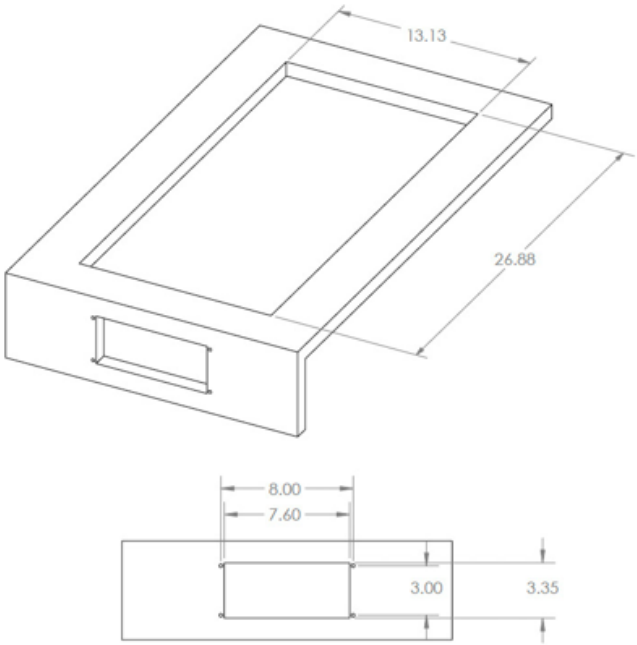

Flush Mount

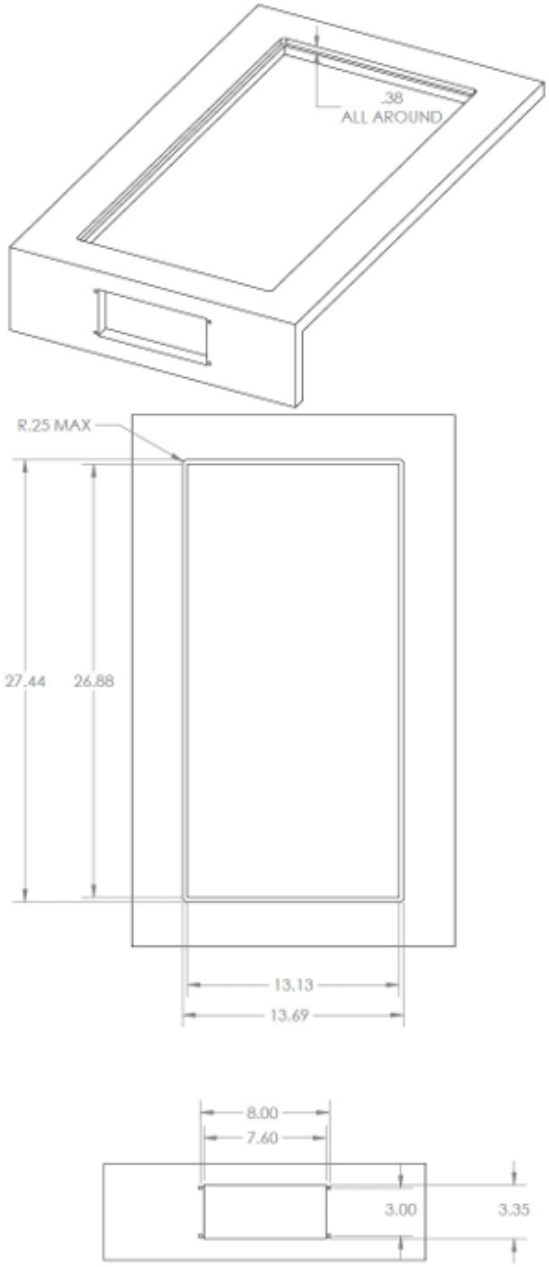

SPECIFICATIONS

2801 Trade Center Drive
Carrollton, Texas 75007
cooktek.com

- **Drop-in Double Hob, Side to Side, Helios Standard**
  - HRD-9500-SS25-1
  - HRD-9500-SS35-1

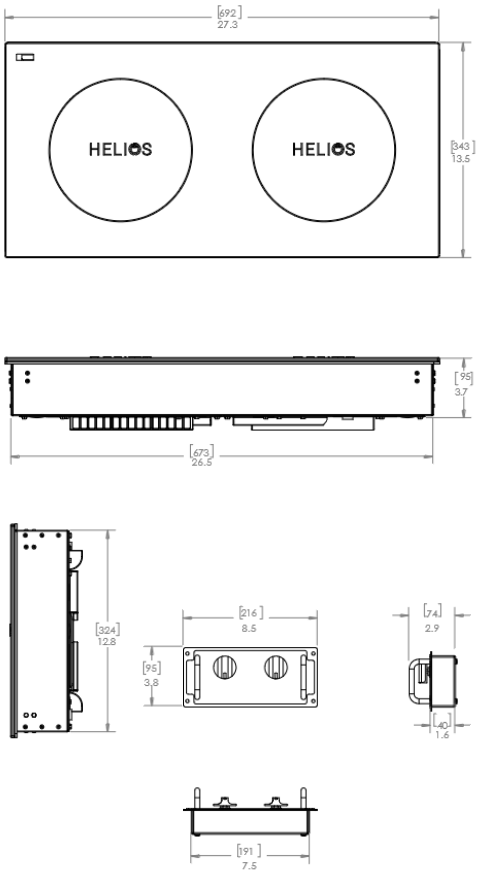

HELIOS STANDARD DROP-IN DOUBLE HOB SIDE TO SIDE		
Full Unit Height	3.7”	95 mm
Full Unit Width	27.3”	692 mm
Housing Width	26.5”	673 mm
Full Unit Depth	13.5”	343 mm
Housing Depth	12.8”	324 mm
Cutout Width	26.88”	683 mm
Cutout Depth	13.13”	334 mm
Weight	30 lb	13.6 kg
Max Ambient Temperature	122 °F	50 °C

2801 Trade Center Drive
Carrollton, Texas 75007
cooktek.com

4.2.1 Drop-in Side to Side Double Hob Cutout Dimensions

Top Mount

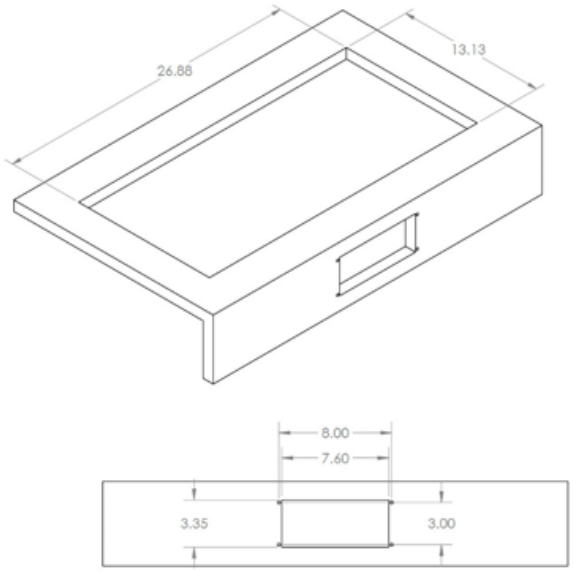

Flush Mount

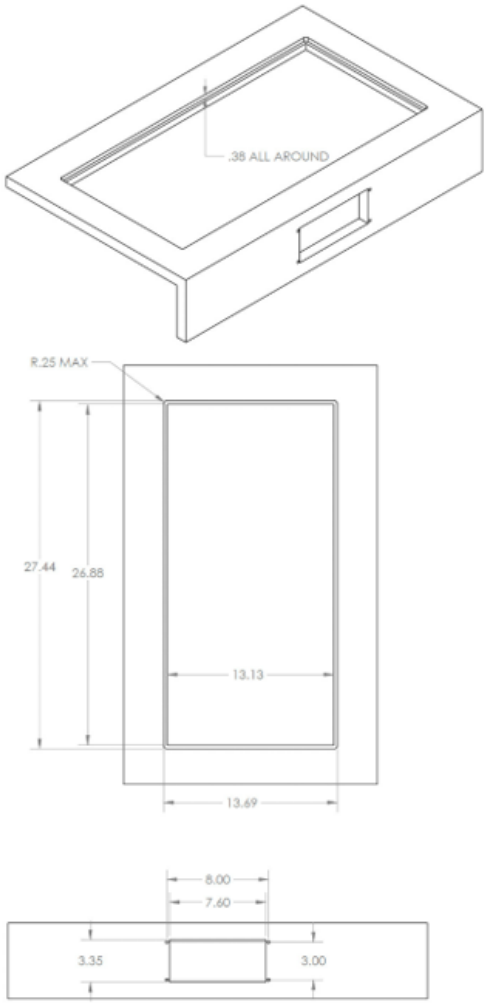

SPECIFICATIONS

2801 Trade Center Drive
Carrollton, Texas 75007
cooktek.com

- **Drop-in Wok, Helios Standard**
  - HRD-9500-WK18-1
  - HRD-9500-WK25-1
  - HRD-9500-WK35-1

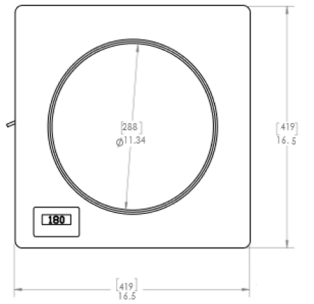

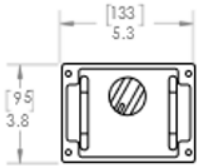

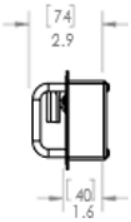

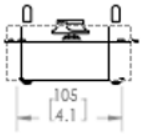

HELIOS STANDARD DROP-IN WOK		
Full Unit Height	6.2”	178 mm
Full Unit Width	16.5”	419 mm
Housing Width	15.38”	391 mm
Full Unit Depth	16.5”	419 mm
Housing Depth	15.38”	391 mm
Cutout Width	15.75”	400 mm
Cutout Depth	15.75”	400 mm
Weight	22 lb	8.6 kg
Max Ambient Temperature	122 °F	50 °C

2801 Trade Center Drive
Carrollton, Texas 75007
cooktek.com

4.2.2 Drop-in Woks Cutout Dimensions

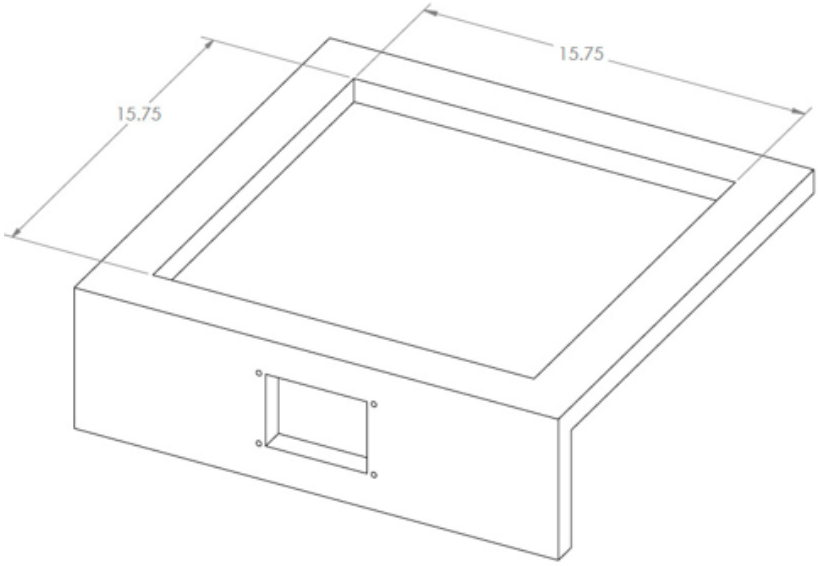

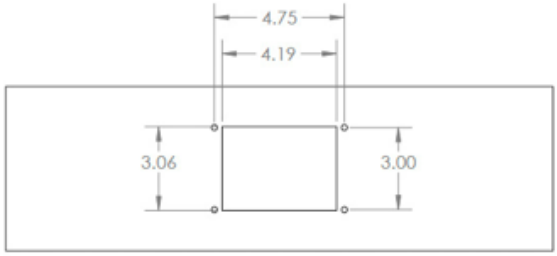

2801 Trade Center Drive
Carrollton, Texas 75007
cooktek.com

5. DROP-IN COOKTOP AND WOK INSTALLATION

1. Cut out and drill holes as required in the countertop.
2. Drill holes for control box mounting.
3. Apply a bead of an NSF Standard 51-approved sealant (such as Dow Corning 732 Multi-Purpose Sealant or GE RTV 108) around all four edges of the countertop cutout.

   Note: Carefully follow the sealant manufacturer's instructions to ensure proper adhesion.
4. Place cooktop or wok over countertop cutout.
5. Pass the control panel and cord through the cutout, then pass the base of the cooktop or wok through the hole until the flange rests on the countertop.
6. Mount the control panel using the screws supplied.

   Note: Mounting options are illustrated in the attached drawing.
7. Connect the cooktop or wok to a grounded 120 VAC or 200–240 VAC single-phase receptacle, or to a 380–415 VAC three-phase supply for applicable models.
8. Check the rating plate on the cooktop or wok to verify the correct voltage.

   Note: For proper operation, a dedicated circuit should be used for each unit installed. Each circuit should be protected with a 20-amp minimum circuit breaker. For optimal operation, the counter should have an opening near the unit to allow fresh air to circulate beneath it.

2801 Trade Center Drive
Carrollton, Texas 75007
cooktek.com

6. HELIOS STANDARD (NON-TOUCH DISPLAY)

- **Freestanding**: HRF-9500-SH18-1, HRF-9500-SH25-1, HRF-9500-SH35-1

- **Drop-in**: HRD-9500-SH18-1, HRD-9500-SH25-1, HRD-9500-SH35-1

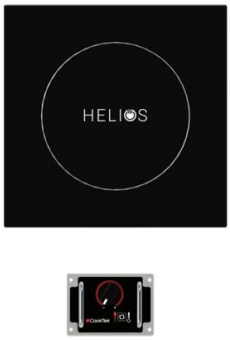

- **Freestanding Double Hobs**: HRF-9500-FB25-1, HRF-9500-FB35-1, HRF-9500-SS25-1, HRF-9500-SS35-1

- **Drop-in Double Hobs**: HRD-9500-FB25-1, HRD-9500-FB35-1, HRD-9500-SS25-1, HRD-9500-SS35-1

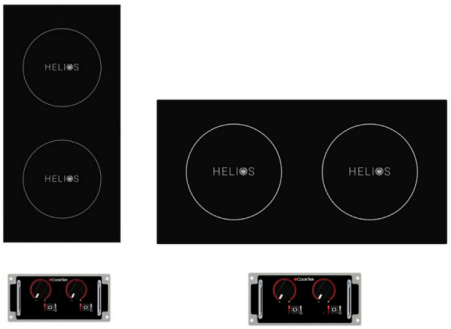

- **Freestanding Woks**: HRF-9500-WK18-1, HRF-9500-WK25-1, HRF-9500-WK35-1

- **Drop-in Woks**: HRD-9500-WK18-1, HRD-9500-WK25-1, HRD-9500-WK35-1

6.1 Power Mode

Your CookTek cooktop has two different cooking modes: Temperature Mode and Power Mode. Woks only operate in Power Mode.

- Connect the cooktop to a grounded power source. Models operate on 100–120 VAC (up to 1800 W), 200–240 VAC (up to 3500 W), or 380–415 VAC three-phase (up to 3500 W), depending on the model. Refer to the rating plate to verify the correct voltage and wattage. Operating below the rated voltage may reduce power and slow heating.

  Note: For proper operation, use an independently dedicated circuit for each installed unit. Each circuit should be protected with a 20-amp breaker. When your application requires high-intensity heat or a quick temperature rise, activate the Power mode.
- Turn the cooktop ON by turning the control knob to the right.
- Press the Temperature/Power button briefly.
- Turn the control knob until the desired Power setting (1-20) appears on the LED display.
- Turn the control knob to the left to decrease power and to the right to increase power.
- To turn off the cooktop or wok, rotate the control knob all the way to the left until it clicks, and the LED display turns off.

  Notes:
  - *You can switch between Temperature Mode and Power Mode at any time by pressing the Temperature/Power button (cooktops only).*
  - *The internal cooling fan may operate briefly after the power supply has been disconnected. This behavior is typical and should not be a cause for concern.*

Temperature/Power Button

HELIOS STANDARD (NON-TOUCH DISPLAY)

2801 Trade Center Drive
Carrollton, Texas 75007
cooktek.com

6.2 Helios Standard Cooktop - Temperature Mode

When the recipe requires maintaining a precise, even temperature for a set period, Temperature Mode is recommended. Woks only operate in Power Mode.

Note: Temperature Mode monitors the temperature of the bottom of the pan. For the actual temperature of the food contents, a contact thermometer should be used.

- Turn the cooktop ON by turning the control knob to the right.
- Put the cookware with ingredients on the cooktop.
- Press the Temperature Mode button.
- Turn the control knob until the desired cooking temperature appears on the LED display.
  Note: The displayed temperature will change from the set temperature to the measured temperature three seconds after the control knob is moved. The LED will display the measured temperature until the target temperature is reached.
- To turn off the cooktop, turn the control knob to the far left until it clicks, and the LED display turns off.
  Note: If the unit is left on and unattended for five or more minutes without a pan on its surface, it will automatically enter Sleep Mode to save energy. You can tell it's in Sleep Mode because the LED shows horizontal dashes. To resume normal operation, rotate the power knob clockwise or counterclockwise.

6.3 Helios Standard Wok Operation

Wok operation is similar to using a standard cooktop, with just a few minor differences.

- Use the control knob to select a relative cooking level, which will indicate a setting ranging from 1 (lowest setting) to 20 (highest setting).
- DO NOT leave any unattended pans on the wok.
- Turn the wok off when not in use.
- Do not place an empty pan on the wok. This can cause the pan and the unit to overheat, potentially damaging the unit.
- This wok unit is intended for use with 14" induction-compatible wok pans. Using smaller pans may result in frequent nuisance errors and automatic precautionary shutdowns.

2801 Trade Center Drive
Carrollton, Texas 75007
cooktek.com

7. HELIOS TOUCH

- **Freestanding Single Hob**: HTF-9500-SH18-1, HTF-9500-SH25-1, HTF-9500-SH35-1

- **Freestanding Double Hobs**: HTF-9500-FB25-1, HTF-9500-FB35-1, HTF-9500-SS25-1, HTF-9500-SS35-1

- **Freestanding Woks**: HTF-9500-WK18-1, HTF-9500-WK25-1, HTF-9500-WK35-1

7.1 Power Mode

Your CookTek cooktop has two different cooking modes: Temperature Mode and Power (%) Mode. Woks only operate with Power Mode.

- Connect the cooktop to a grounded power source. Models operate on 100–120 VAC (up to 1800 W), 200–240 VAC (up to 3500 W), or 380–415 VAC three-phase (up to 3500 W), depending on the model. Refer to the rating plate to verify the correct voltage and wattage. Operating below the rated voltage may reduce power and slow heating.

  Note: For proper operation, use an independently dedicated circuit for each installed unit. Each circuit should be protected with a 20-amp breaker. When your application requires high-intensity heat or a quick temperature rise, activate the Power mode.
- Turn the cooktop ON by turning the control knob to the right.

  Note: The internal cooling fan may briefly operate after the power supply is disconnected. This behavior is typical and should not be a cause for concern.
- Turn the control knob until the desired power percentage appears on the display.

2801 Trade Center Drive
Carrollton, Texas 75007
cooktek.com

- Turn the control knob to the left to decrease power and to the right to increase power.
- To turn off the cooktop or wok, press the power button.

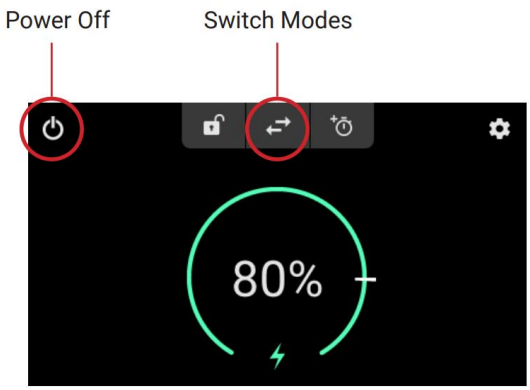

Single Hob

- Press the Temperature/Power button briefly.
  Note: You can switch between Temperature Mode and Power Mode at any time by pressing the toggle arrows (available on single- and double-hob models only).

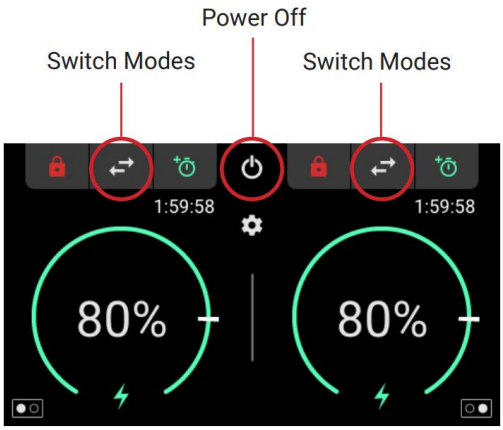

Double Hob

7.2 Helios Touch Cooktop - Temperature Mode

When the recipe requires a precise, even temperature to be maintained for a period, the
Temperature Mode is recommended.

Note: Temperature Mode monitors the temperature of the bottom of the pan. For the actual temperature of the food contents, a contact thermometer should be used.

- Press the power button on the user interface to turn the cooktop ON.
  Note: The unit defaults to Temperature Mode.
- Press the toggle arrows on the user interface to switch to Power Mode.
- Put the cookware with ingredients on the cooktop.
- Turn the control knob until the desired cooking temperature appears on the user interface.
  Note: The temperature displayed will change from the set temperature to the measured temperature three seconds after the control knob is moved. The LED will display the measured temperature until the target temperature is reached.
- To turn off the cooktop, press the power button.

2801 Trade Center Drive
Carrollton, Texas 75007
cooktek.com

7.3 Helios Touch Wok Operation

Wok operation is similar to using a standard cooktop, with just a few minor differences. Woks only operate in Power Mode.

- Use the control knob to select a power percentage.
- Turn the control knob to the left to decrease power and to the right to increase power.
- DO NOT leave any unattended pans on the wok
- Do not place an empty pan on the wok. This can cause the pan and the unit to overheat, potentially damaging the unit.

  *Note: The screen will display **No Pan** if left unattended.*
- This wok unit is intended for use with 14" induction-compatible wok pans. The unit may not recognize a smaller pan and will not heat correctly.
- Turn the wok off when not in use.

  Note: The internal cooling fan may briefly operate after the power supply is disconnected. This behavior is typical and should not be a cause for concern.

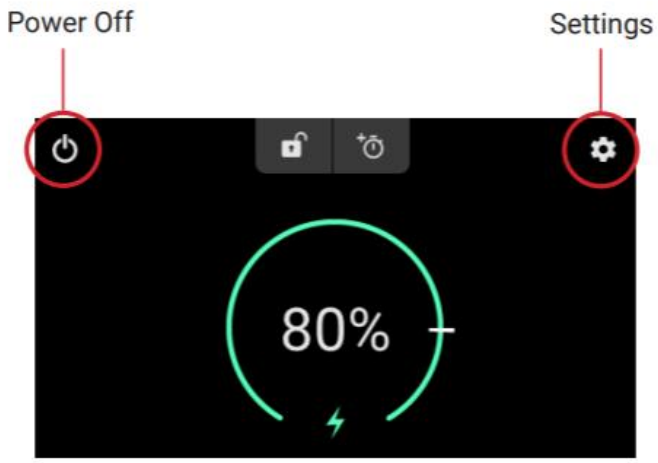

2801 Trade Center Drive
Carrollton, Texas 75007
cooktek.com

8. DOUBLE HOB COOKTOPS OPERATION

- Press the power button on the user interface to turn the cooktop ON.
  Note: The unit defaults to Power Mode.
- Each hob has its own independently controlled Temperature/Power Mode toggle arrows.
- To select a hob for adjusting the temperature or power percentage, press the control knob downward, or press the temperature/power percentage ring corresponding to the desired hob.
- The icons in the bottom corners indicate which hob is active by highlighting the circle green.
- Turn the control knob until the desired power percentage appears on the user interface.
- Turn the control knob to the left to decrease power and to the right to increase power.
- To turn the cooktop off, press the power button.
  Note: For proper operation, a dedicated circuit is required for each installed unit. Each unit must be protected with a 30A minimum circuit breaker.

Settings

Press the gear icon to access the settings:

- Temperature Scale - Select Fahrenheit or Celsius
- Error Log
- Screen Brightness
- Firmware Versions
- Performance Data

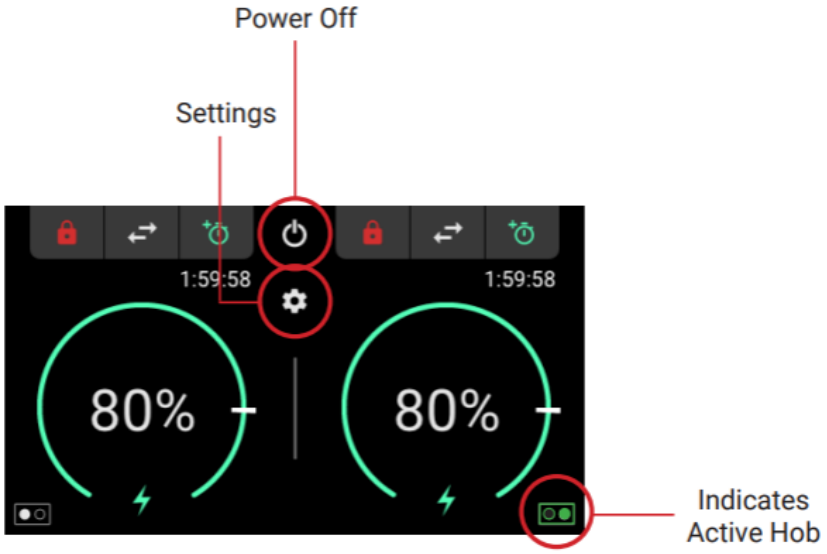

2801 Trade Center Drive
Carrollton, Texas 75007
cooktek.com

9. CLEANING AND MAINTENANCE

Your CookTek induction cooktop is easy to keep clean and maintain. Follow the instructions below:

1. Turn the unit OFF and remove the plug from any power outlets prior to cleaning.
2. When the unit is cool, wipe the surface and body with a damp cloth.
3. Use a mild scouring agent on the stainless-steel housing, such as Bon Ami or Barkeeper's Friend, for greasy or resistant soiling.
   Note: Do not use a lye-based cleaner, such as an oven cleaner, as it may damage the cooktop.
4. To clean the glass surface, use a mild detergent or glass cooktop cleansing cream.
   Note: Never immerse the cooktop in water or put it in the dishwasher.

9.1 Grease Filter Maintenance

This unit comes equipped with a grease filter(s) to protect the electronics from contaminants. Grease filter cleaning procedures:

- Grease filter(s) should be removed and cleaned every two weeks.
- More frequent cleaning may be necessary if they appear clogged and/or operate in heavy, grease-laden environments.

CAUTION:

- **Do not operate the unit without the grease filter(s) installed.**
- **If the unit displays an error code of "E4," the overheat error, this may indicate a clogged filter.**
  Note: Follow the procedure below and allow the unit to cool before resuming operation (turn it off for approximately 5 minutes).

1. Slide filter(s) out of the track on the bottom of the unit.
2. Rinse with hot water to remove dirt and grease.
3. Shake remaining water out and let stand until completely dry before reinstalling.
4. Reinstall filter(s), ensuring the arrow on the edge of the filter(s) is pointing into the unit.
   Note: Filters are also dishwasher safe.

2801 Trade Center Drive
Carrollton, Texas 75007
cooktek.com

10. TROUBLESHOOTING

Symptom	Probable Cause	Corrective Action
No power (no lights or fan noise)	• Unit is unplugged • No power to the receptacle	• Plug the unit into the appropriate receptacle. • Make sure that the receptacle is energized. • Check wall switches. • Check the circuit breaker. • Plug a different electronic device into the receptacle to make sure that power is present.
Pan does not heat	• Pan is not induction compatible • Pan not centered	• Use an induction-compatible pan. • Center pan.
The cooktop or wok suddenly stops heating	• Possible power brownout • Circuit shared with another electrical device • Air vents blocked or insufficient air circulation • Safety shut off engaged	• Assure proper voltage/power levels • Make sure the cooktop is not sharing a circuit with other electrical devices • Check air vents to make sure that they are not blocked • Make sure that there is sufficient air flow around the appliance • The safety shut-off will engage if an empty pan is left on the cooktop surface while the unit is working at full power • Make sure that the cooktop surface is clear and then wait 15-20 minutes for the unit to reset
Pan does not get hot enough, even though power levels are set to maximum – induction-compatible pan in use	• Extension cord in use • Circuit shared with another electrical device	• DO NOT use extension cords • Extension cords may affect the power levels reaching the appliance • Make sure that the cooktop is not sharing a circuit with other electrical devices

2801 Trade Center Drive
Carrollton, Texas 75007
cooktek.com

Symptom	Probable Cause	Corrective Action
Pan heats unevenly, does not maintain the heat level, or overheats	• Pan is not induction compatible • Pan bottom may not be flat enough • Pan not centered • Pan diameter is less than 7” (178 mm)	• Use an induction-compatible pan • Use a flatter pan • Center pan • Use a larger induction-compatible pan

2801 Trade Center Drive
Carrollton, Texas 75007
cooktek.com

11. ERROR CODES

If a malfunction occurs, your CookTek cooktop/wok will display an error code on the interface and beep the number of times specified by the code. Refer to the following table when encountering an error code. To clear the error, remove the pan from the unit, press the POWER button, or unplug the unit.

Error Code	Description	Probable Cause	Corrective Action
1	RTD (temperature sensor) is malfunctioning.	RTD sensor has shorted.	Reconnect or replace RTD. Service may be required.
2	RTD temperature is too high.	Glass surface is too hot or RTD sensor has broken.	• Remove any pans from the cooktop surface and let the unit cool. • Turn the unit off, then on. • If the problem was temperature-related, the unit will return to regular operation. Otherwise, service is required.
3	Current is too high	Possible mechanical damage to the coil or a foreign object on the cooktop	Try different cookware. Service may be required.
4	Electronics are overheating	The fan is broken, the ventilation is bad, or the ambient temperature is too hot	• Check airflow. • Clear air vents. • Listen for fan operation.
6	Input line (from power outlet) voltage is too high	Something else is on the same circuit. Line voltage fluctuations at the end or beginning of the workday. Voltage: > 132 VAC for 100–120 VAC units, >264 VAC for 200–240 VAC units, or >430 VAC for 380–415 VAC units	• Unplug the unit, wait 5 seconds, and plug it in again to reset. • If the problem persists, have an electrician monitor the line voltage.
7	Hardware failure.	Inverter I/O problem	Unplug the unit, wait 5 seconds, then plug it back in to reset. Service may be required.

2801 Trade Center Drive
Carrollton, Texas 75007
cooktek.com

Error Code	Description	Probable Cause	Corrective Action
8	Zero cross error	Bad AC source, board component failure	• Turn the unit off, then on. • Plug the unit into an outlet on a different circuit breaker. • If the problem persists, service is required on the device.
16	System error	CPU I/O problem	Unplug the unit, wait 5 seconds, and plug it in again to reset

2801 Trade Center Drive
Carrollton, Texas 75007
cooktek.com

12. WARRANTY

Refer to the Advanced Replacement Warranty policy for more information.

CookTek®
Country Code: NA/EU

Global Operations
2801 Trade Center Drive
Carrollton, Texas 75007 USA
+1 214.379.6000
+1 214.379.6073 fax

Business & Technology Centre
Bessemer Drive
Stevenage
Herts SG1 2DX
United Kingdom
+44 8456021544
+44 8456021636 fax

Customer Support
+1 214.379.6000
+1 214-379-6073 fax
cooktek.com