24ANB6
Infinity® Air Conditioner with Puron® Refrigerant
1–1/2 to 5 Nominal Tons (Size 18–60)

Carrier
turn to the experts

Wiring Diagram

CONNECTION DIAGRAM

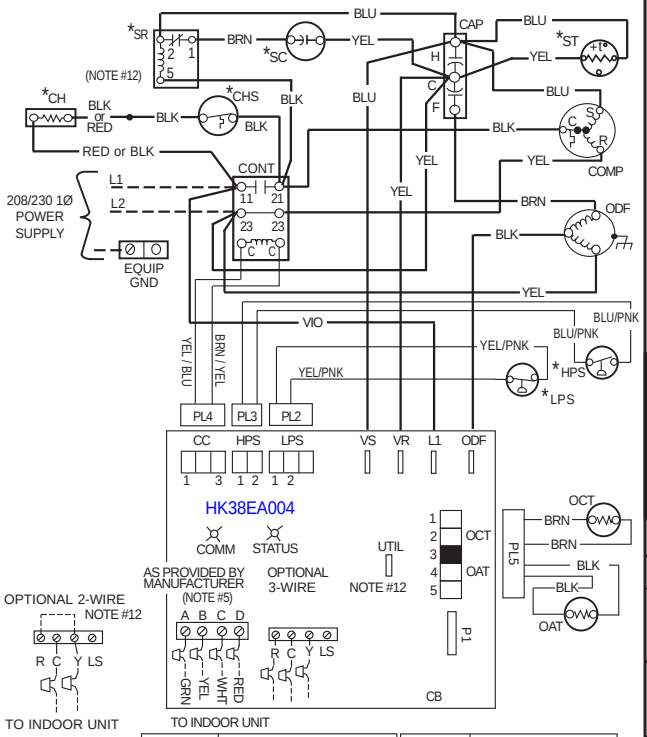

FLASH CODE	FAULT DEFINITION	FLASH CODE	FAULT DEFINITION
On, No Flash	Standby (3 or 4 Wire Only)	55	Coil Temp Sensor
1, Pause	Normal Operation	56	Thermistor Range Error
16	System Communications Failure	72	Thermal Cutout
31	High Pressure Switch	73	Contactor Shorted
32	Low Pressure Switch	74	No 240V at Compressor
45	Control Fault	82	Thermal lockout
46	Brown out (24V)	83	Low pressure lockout
53	Outside Temp Sensor	84	High pressure lockout

LEGEND

- FACTORY POWER WIRING
- FACTORY CONTROL WIRING
- FIELD CONTROL WIRING
- FIELD POWER WIRING
- CONDUCTOR ON CIRCUIT BOARD
- COMPONENT CONNECTION
- 1/4 - INCH QUICK CONNECT TERMINALS
- FIELD SPLICE
- JUNCTION
- PLUG RECEPTACLE
- CAP — CAPACITOR (DUAL RUN)
- CB — CIRCUT BOARD

*CH	CRANKCASE HEATER
*CHS	CRANKCASE HEATER SWITCH
COMP	COMPRESSOR
CONT	CONTACTOR
*HPS	HIGH PRESSURE SWITCH
*LPS	LOW PRESSURE SWITCH
OAT	THERMISTOR (OUTDOOR AIR)
OCT	THERMISTOR COIL
ODFR	OUTDOOR FAN RELAY
ODF	OUTDOOR FAN
*SC	START CAPACITOR
*SR	START RELAY
*ST	START THERMISTOR

* MAY BE FACTORY OR FIELD INSTALLED

NOTES:

1. Compressor and fan motor furnished with inherent thermal protection.
2. To be wired in accordance with National Electric Code (N.E.C.) and local codes.
3. N.E.C. Class 2, 24V circuit, min. 40VA required, 60VA on units installed with LLS.
4. Use copper conductors only from disconnect to unit suitable for at least 75ºC (165ºF).
5. For communicating control only.
6. If indoor section has a transformer with a grounded secondary, connect the grounded side to "C" on the circuit board.
7. If any of the original wire, as supplied, must be replaced, use the same or equivalent wire.
8. Check all electrical connections inside control box for tightness.
9. Do not attempt to operate unit until service valves have been opened.
10. Symbols are electrical representation only.
11. When start relay and start Capacitor are installed, start Thermistor is not used.
12. In case of non-communicating Indoor system, disconnect factory provided wires from A,B,C, and D terminals. Using factory provided wires, connect to R, C and/or Y Terminals per installation instructions. Connect field 24V wires to factory provided wires, cap or remove unused factory provided wires.

SCHEMATIC DIAGRAM (LADDER FORM)

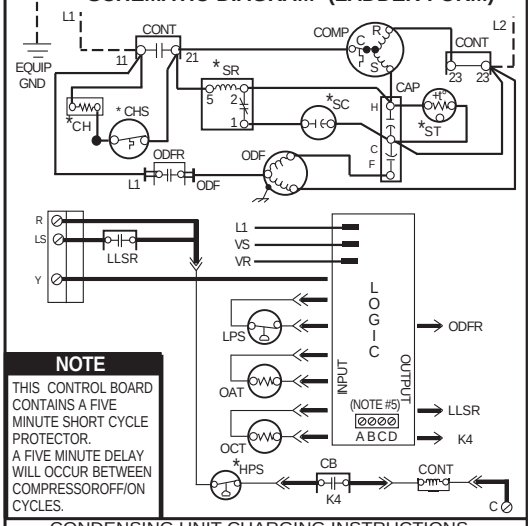

NOTE

THIS CONTROL BOARD CONTAINS A FIVE MINUTE SHORT CYCLE PROTECTOR.
A FIVE MINUTE DELAY WILL OCCUR BETWEEN COMPRESSOROFF/ON CYCLES.

CONDENSING UNIT CHARGING INSTRUCTIONS
For use with units using R-410A refrigerant

REQUIRED LIQUID LINE TEMPERATURE

Liquid Pressure at Service Valve (psig)	Required Subcooling Temperature (ºF) 6	8	10	12	14	16
251	78	76	74	72	70	68
259	80	78	76	74	72	70
266	82	80	78	76	74	72
274	84	82	80	78	76	74
283	86	84	82	80	78	76
291	88	86	84	82	80	78
299	90	88	86	84	82	80
308	92	90	88	86	84	82
317	94	92	90	88	86	84
326	96	94	92	90	88	86
335	98	96	94	92	90	88
345	100	98	96	94	92	90
354	102	100	98	96	94	92
364	104	102	100	98	96	94
374	106	104	102	100	98	96
384	108	106	104	102	100	98
395	110	108	106	104	102	100
406	112	110	108	106	104	102
416	114	112	110	108	106	104
427	116	114	112	110	108	106
439	118	116	114	112	110	108
450	120	118	116	114	112	110
462	122	120	118	116	114	112
474	124	122	120	118	116	114

COOLING ONLY CHARGING PROCEDURE

1. Only use subcooling charging method when OD ambient is greater than 70ºF and less than 100ºF, indoor temp is greater than 70ºF and less than 80ºF, and line set is less than 80 ft.
2. Operate unit a minimum of 15 minutes before checking the charge.
3. Measure liquid service valve pressure by attaching an accurate gauge to the service port.
4. Measure the liquid line temperature by attaching an accurate thermistor type or electronic thermometer to the liquid line near the outdoor coil.
5. Refer to unit rating plate for required subcooling temperature.
6. Find the point where the required subcooling temperature intersects the measured liquid service valve pressure.
7. To obtain the required sub-cooling temperature at specific liquid line pressure, add refrigerant if liquid line temperature is higher than indicated. When adding refrigerant, charge in liquid form using a flow restricting device into suction service port. Recover refrigerant if temperature is lower. Allow a tolerance of +/- 3ºF.

⚠ CAUTION

1. Compressor damage may occur if system is over charged.
2. This unit is factory charged with R-410A in accordance with the amount shown on the rating plate. The charge is adequate for most systems using matched coils and tubing not over 15 feet long. Check refrigerant charge for maximum efficiency. See Product Data Literature for required Indoor air Flow Rates and for use of line lengths over 15 feet.
3. Relieve pressure and recover all refrigerant before system repair or final disposal. Use all service ports and open all flow-control devices, including solenoid valves.
4. Never vent refrigerant to atmosphere. Use approved recovery equipment.

337786-101 REV. A

Fig. 1 – Wiring Diagram — Model sizes 1-1/2 - 5 tons, 208/230-1

Copyright 2011 Carrier Corp. • 7310 W. Morris St. • Indianapolis, IN 46231
Printed in U.S.A. Edition Date: 04/11 **Catalog No: 24ANB6−1W**

Manufacturer reserves the right to change, at any time, specifications and designs without notice and without obligations.

Replaces: New