24ANB7
Infinity™ 17 2–Stage Air Conditioner with Puron® Refrigerant 2 to 5 Nominal Tons

Carrier
turn to the experts

Wiring Diagram

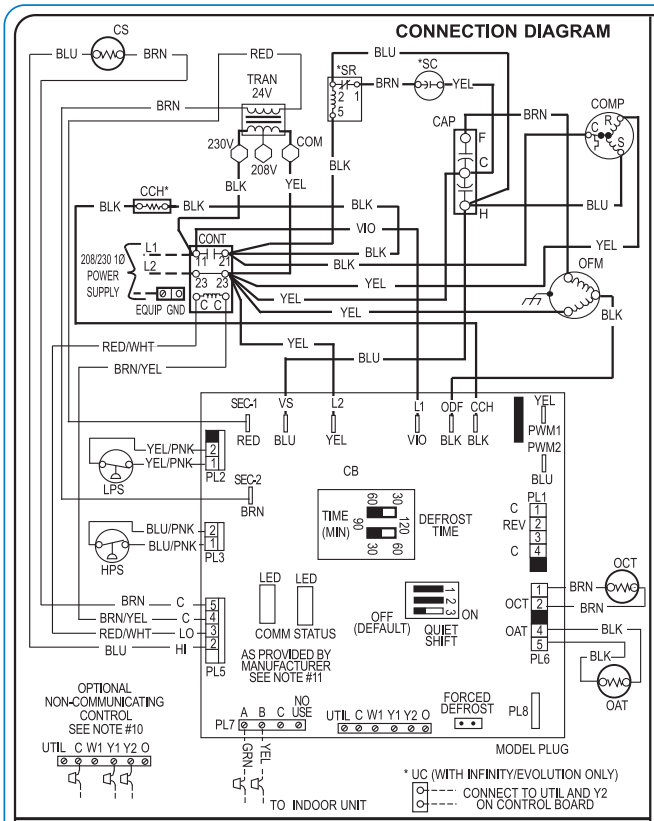

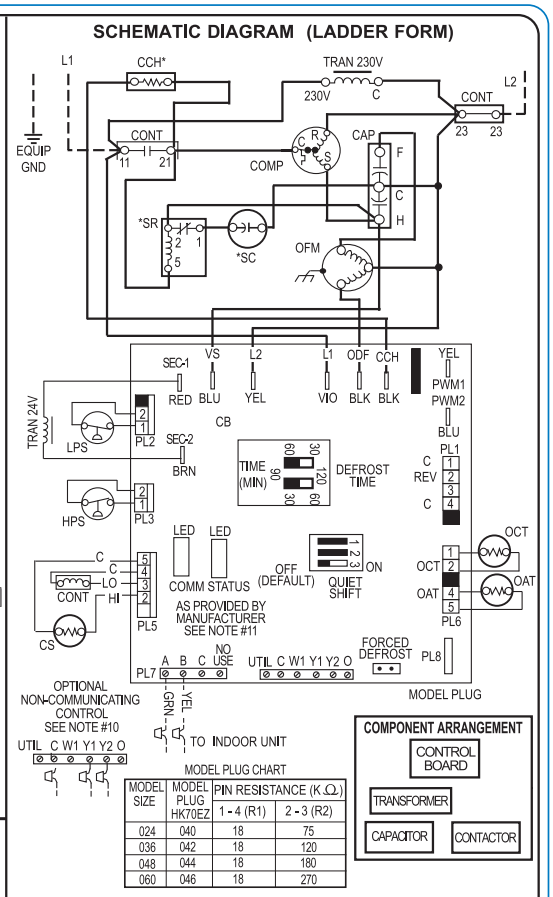

MODEL SIZE	MODEL PLUG HK70EZ	PIN RESISTANCE (K.Ω.) 1 - 4 (R1)	2 - 3 (R2)
024	040	18	75
036	042	18	120
048	044	18	180
060	046	18	270

LEGEND

FACTORY POWER WIRING	
FACTORY CONTROL WIRING	
FIELD CONTROL WIRING	
FIELD POWER WIRING	
COMPONENT CONNECTION	
FIELD SPLICE	
JUNCTION	
CAP	CAPACITOR
CB	CIRCUIT BOARD
*CCH	CRANKCASE HEATER
COMM	SYSTEM COMMUNICATION
COMP	COMPRESSOR
CONT	CONTACTOR
CS	COMP HIGH CAP SOLENOID
HPS	HIGH PRESSURE SWITCH
LPS	LOW PRESSURE SWITCH
* LS	LIQUID SOLENOID
OAT	THERMISTOR (OUTDOOR AIR)
OCT	THERMISTOR COIL
OFM	OUTDOOR FAN MOTOR
RVS	REVERSING VALVE SOLENOID
* SC	START CAPACITOR
SEV	SOLENOID EXPANSION VALVE
* SR	START RELAY
STATUS	SYSTEM FUNCTION LIGHT
TRAN	TRANSFORMER
*UC	UTILITY CURTAILMENT

*** MAY BE FIELD INSTALLED**

FLASH CODE	OPERATION OR FAULT DEFINITION	FLASH CODE	OPERATION OR FAULT DEFINITION
On, No Flash	Standby	47	No 230v with Call to Run
1, Pause	Low Stage	53	Outdoor Air Temp Sensor
2, Pause	High Stage	55	Coil Temp Sensor
Continuous Flash	Emergency Mode	56	Temp Sensor Range Error
5, Pause	Brown Out is Disabled	71	Low Stage Thermal Cutout
6, Pause	Brown Out is Active	72	High Stage Thermal Cutout
16	System Communications Failure	73	Contactor Shorted
25	Invalid Model Plug	74	Contactor Open (No 230v to Comp)
31	High Pressure Switch Trip	81	Low Stage Thermal Lockout (4 HRS)
32	Low Pressure Switch Trip	82	High Stage Thermal Lockout (4 HRS)
45	Control Fault	83	Low Pressure Lockout (4 HRS)
46	Brown out (230V)	84	High Pressure Lockout (4 HRS)

Short flashes indicate the first digit in the status code, followed by long flashes indicating the second digit of the status code.

NOTES:

1. Compressor furnished with inherent thermal protection.
2. To be wired in accordance with National Electric Code (N.E.C.) and local codes.
3. Outdoor unit control requires a minimum of 27 VA, 24 VAC control power.
4. Use copper conductors only. Use conductors suitable for at least 75°C (167°F).
5. If indoor section has a transformer with a grounded secondary, connect the grounded side to "C".
6. If any of the original wire, as supplied, must be replaced, use the same or equivalent wire.
7. Check all electrical connections inside control box for tightness.
8. Do not attempt to operate unit until service valves have been opened.
9. In case of a communicating indoor system, **MUST USE WITH USER INTERFACE LISTED IN PRE-SALE LITERATURE ONLY.**
10. In case of non-communicating indoor system disconnect factory provided wires from A, and B terminals. Use factory provided wires to connect to Y1, Y2, and C as required by Installation Instructions. Cap or remove unused factory provided wires.
11. For Communicating Control only.

UNIT OPERATION

This control board contains a five minute short cycle protector. A five minute delay will occur between compressor OFF/ON cycles. To bypass delay, short forced defrost pins for 1 second then release.
The crankcase heater is energized during off cycle below 65°F. See Installation Instructions for further information on crankcase heater activation.

339305-101 REV. A

Fig. 1 – Wiring Diagram — Model sizes 2 - 5 tons, 208/230-1

Copyright 2013 Carrier Corp. • 7310 W. Morris St. • Indianapolis, IN 46231

Edition Date: 05/13

Catalog No: 24ANB7–2W

Manufacturer reserves the right to change, at any time, specifications and designs without notice and without obligations.

Replaces: 24ANB7–1W