24ANB7
Infinity™ 17 2–Stage Air Conditioner with Puron® Refrigerant 2 to 5 Nominal Tons

Carrier
turn to the experts

Wiring Diagram

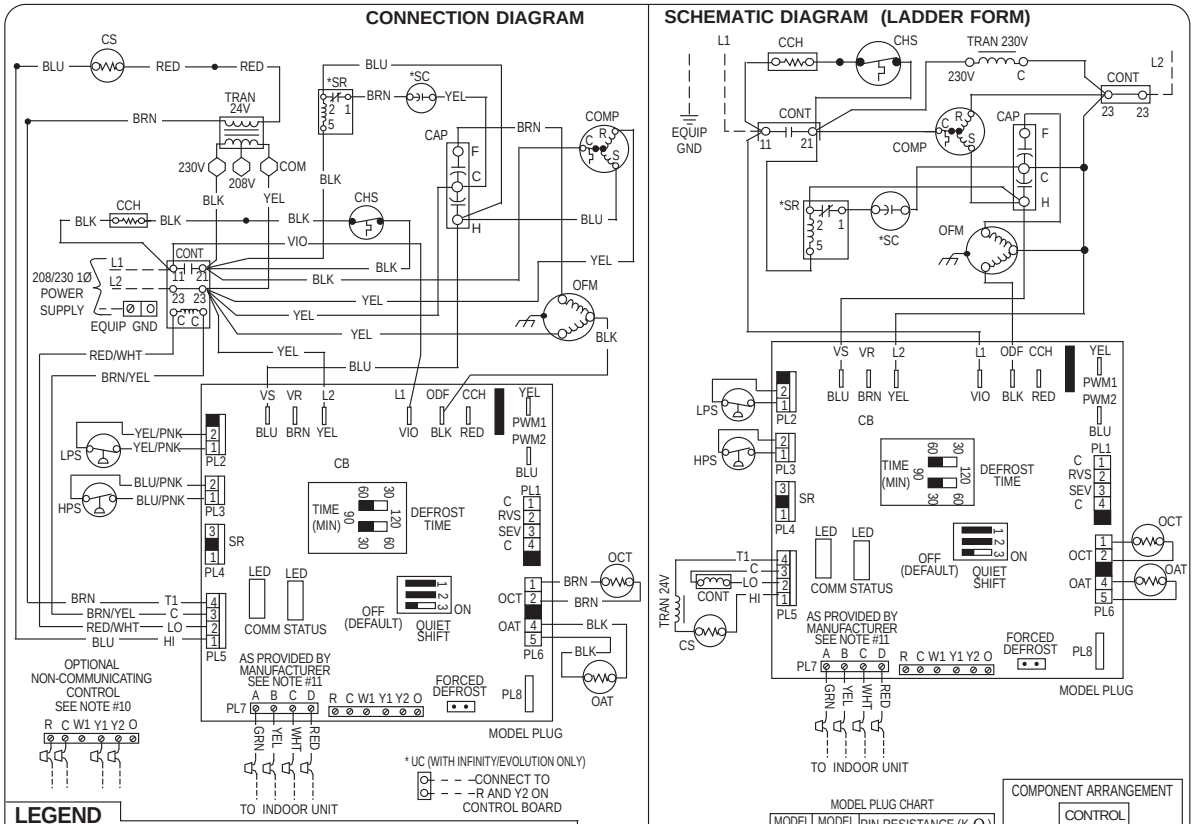

LEGEND

FACTORY POWER WIRING	
FACTORY CONTROL WIRING	
FIELD CONTROL WIRING	
FIELD POWER WIRING	
COMPONENT CONNECTION	
FIELD SPLICE	
JUNCTION	
CAP	CAPACITOR
CB	CIRCUIT BOARD
CCH	CRANKCASE HEATER
CHS	CRANKCASE HEATER SWITCH
COMM	SYSTEM COMMUNICATION
COMP	COMPRESSOR
CONT	CONTACTOR
CS	COMP HIGH CAP SOLENOID
HPS	HIGH PRESSURE SWITCH
LPS	LOW PRESSURE SWITCH
* LS	LIQUID SOLENOID
OAT	THERMISTOR (OUTDOOR AIR)
OCT	THERMISTOR COIL
OFM	OUTDOOR FAN MOTOR
RVS	REVERSING VALVE SOLENOID
* SC	START CAPACITOR
SEV	SOLENOID EXPANSION VALVE
* SR	START RELAY
STATUS	SYSTEM FUNCTION LIGHT
TRAN	TRANSFORMER
* UC	UTILITY CURTAILMENT

*** MAY BE FIELD INSTALLED**

MODEL PLUG CHART

MODEL SIZE	MODEL PLUG HK70EZ	PIN RESISTANCE (K Ω) 1 - 4 (R1)	2 - 3 (R2)
024	040	18	75
036	042	18	120
048	044	18	180
060	046	18	270

COMPONENT ARRANGEMENT

CONTROL BOARD
TRANSFORMER
CAPACITOR
CONTACTOR

FLASH CODE	FAULT DEFINITION
On, No Flash	Standby
1, Pause	Low Stage
2, Pause	High Stage
3, Pause	ODU Fan Delay Defeat Not Active
4, Pause	ODU Fan Delay Defeat Active
5, Pause	Brown out is Disabled
6, Pause	Brown out is Active
16	System Communications Failure
25	Invalid Model Plug
31	High Pressure Switch Trip
32	Low Pressure Switch Trip
45	Control Fault
46	Brown out (230V)

FLASH CODE	FAULT DEFINITION
47	No 230v with Call to Run
53	Outdoor Air Temp Sensor
55	Coil Temp Sensor
56	Temp Sensor Range Error
71	Low Stage Thermal Cutout
72	High Stage Thermal Cutout
73	Contactor Shorted
74	Contactor Open (No 230v to Comp)
81	Low Stage Thermal Lockout (4 HRS)
82	High Stage Thermal Lockout (4 HRS)
83	Low Pressure Lockout (4 HRS)
84	High Pressure Lockout (4 HRS)

Short flashes indicate the first digit in the status code, followed by long flashes indicating the second digit of the status code.

NOTES:

1. Compressor furnished with inherent thermal protection.
2. To be wired in accordance with National Electric Code (N.E.C.) and local codes.
3. Outdoor unit control requires a minimum of 27 VA, 24 VAC control power.
4. Use copper conductors only. Use conductors suitable for at least 75ºC (167ºF).
5. If indoor section has a transformer with a grounded secondary, connect the grounded side to "C".
6. If any of the original wire, as supplied, must be replaced, use the same or equivalent wire.
7. Check all electrical connections inside control box for tightness.
8. Do not attempt to operate unit until service valves have been opened.
9. In case of a communicating indoor system, USE WITH INFINITY / EVOLUTION USER INTERFACE AS LISTED IN PRE-SALE LITERATURE.
10. In case of non-communicating indoor system disconnect factory provided wires from A, B, C, and D terminals. Use factory provided wires to connect to Y1, R, C, and Y2 as required by Installation Instructions. Cap or remove unused factory provided wires.
11. For Communicating Control only.

UNIT OPERATION

This control board contains a five minute short cycle protector. A five minute delay will occur between compressor OFF/ON cycles. To bypass delay, short forced defrost pins for 1 second then release.

The crankcase heater is energized during off cycle below 65ºF.

337894-101 REV. B

Fig. 1 – Wiring Diagram — Model sizes 2 - 5 tons, 208/230-1

Copyright 2011 Carrier Corp. • 7310 W. Morris St. • Indianapolis, IN 46231
Printed in U.S.A. Edition Date: 05/11 **Catalog No: 24ANB7–1W**

Manufacturer reserves the right to change, at any time, specifications and designs without notice and without obligations.

Replaces: New