IMPORTANT FOR FUTURE REFERENCE

Please complete this information and retain this manual for the life of the equipment:

Model #: _____

Serial #: _____

Date Purchased: _____

PARTS LIST

Self - Generating Steam Full Jacket Kettles
ELT-F EL-F EP-F

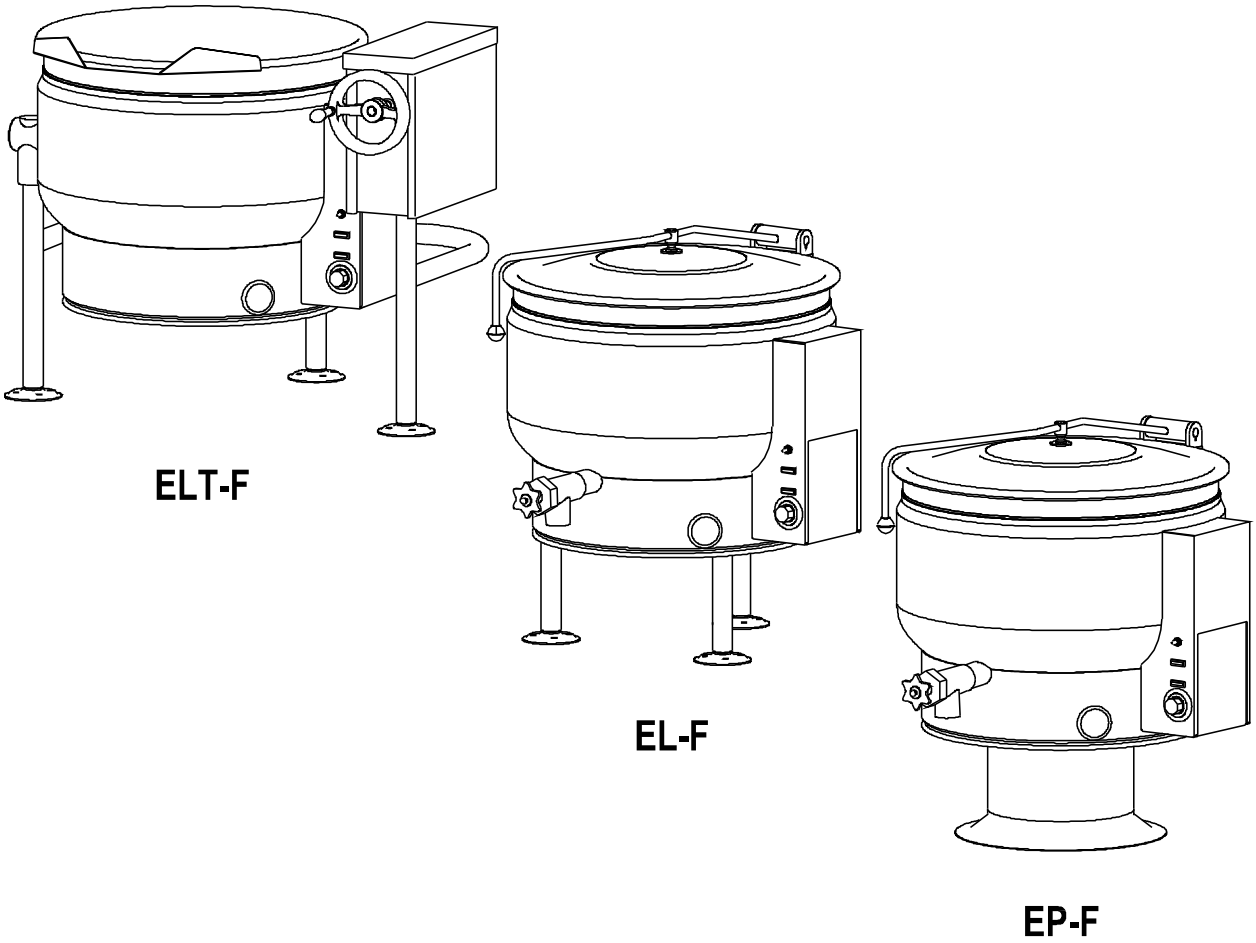

⚠ WARNING

Improper installation, adjustment, alteration, service or maintenance can cause property damage, injury or death. Read the installation, operating and maintenance instructions thoroughly before installing or servicing this equipment.

CROWN FOOD SERVICE EQUIPMENT
A Middleby Company
70 Oakdale Road, Downsview (Toronto) Ontario, Canada, M3N 1V9
Telephone: 919-762-1000 www.crownsteamgroup.com
Printed in Canada

PARTS MANUAL 10169R4

PARTS LIST, SELF-GENERATING STEAM FULL JACKET KETTLES,
ELT-F, EL-F, EP-F

FIGURE 1

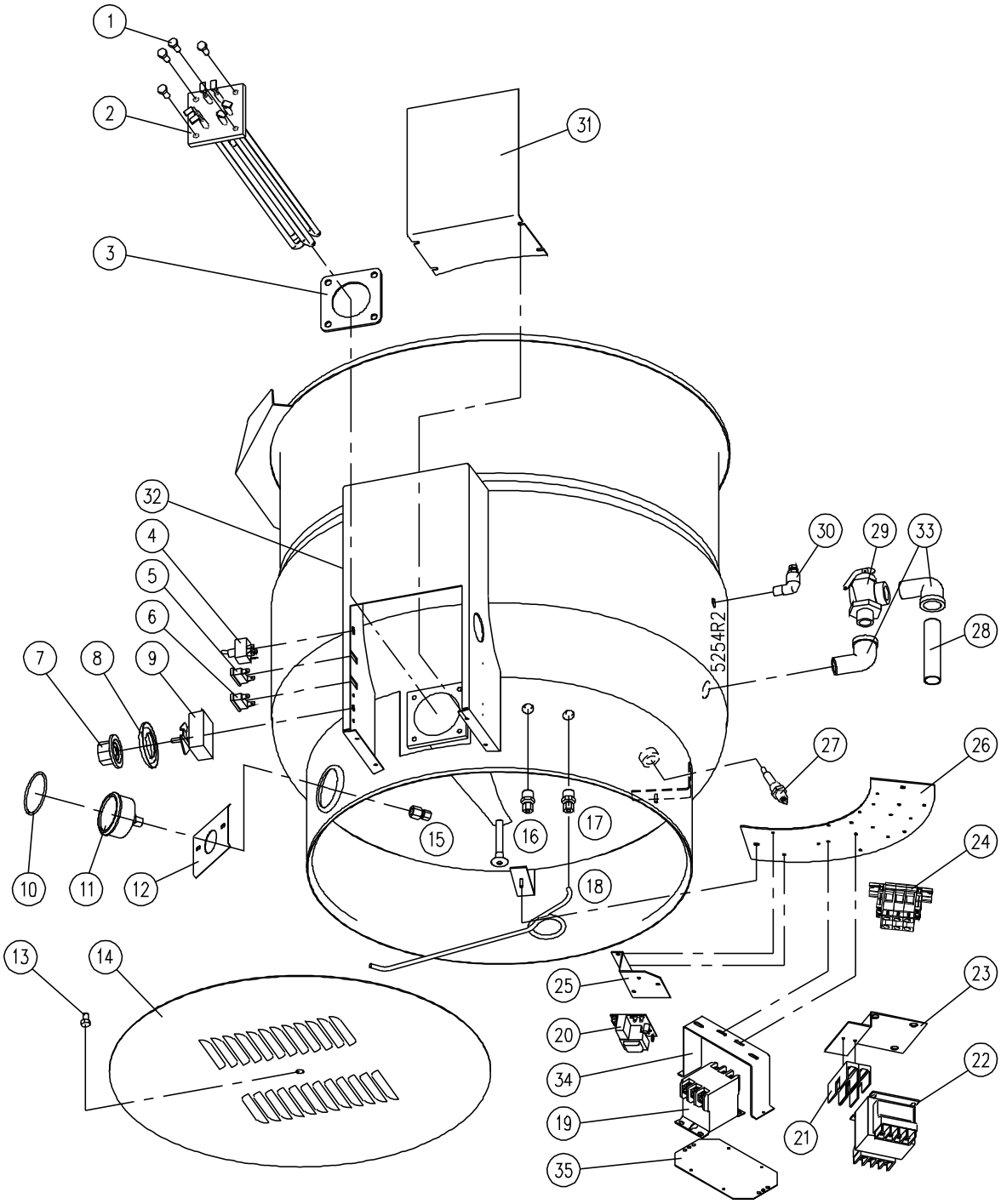

PARTS LIST, SELF-GENERATING STEAM FULL JACKET KETTLES,
ELT-F, EL-F, EP-F

FIGURE 1

	ITEM	PART NO.	DESCRIPTION	QUANTITY			
				20	30	40	60
	1.	M50S-51618-34	Hex Bolt, 5/16 - 18 x 3/4 In. (1-66S6)	4	4	4	4
**	2.	7-5027	Element Assembly, 208V, 18 kW	1	1	1	
		7-5028	Element Assembly, 220/380V, 18 kW	1	1	1	
		7-5029	Element Assembly, 240/416V, 18 kW	1	1	1	
		7-5030	Element Assembly, 480V, 18 kW	1	1	1	
		9-3298	Element Assembly, 600V, 18 kW	1	1	1	
		7-5031	Element Assembly, 208V, 24 kW	1	1	1	1
		7-5037	Element Assembly, 220/380V, 24 kW	1	1	1	1
		7-5032	Element Assembly, 240/416V, 24 kW	1	1	1	1
		7-5033	Element Assembly, 480V, 24 kW	1	1	1	1
		9-3299	Element Assembly, 600V, 24 kW	1	1	1	1
		7-5034	Element Assembly, 208V, 33 kW		1	1	1
		7-5038	Element Assembly, 220/380V, 33 kW		1	1	1
		7-5035	Element Assembly, 240/416V, 33 kW		1	1	1
		7-5036	Element Assembly, 480V, 33 kW		1	1	1
		2348-2	Element Assembly, 600V, 33 kW		1	1	1
	3.	5986-1	Element Gasket	1	1	1	1
	4.	9110-1	Power Switch	1	1	1	1
	5.	4996-5	Pilot Light - Amber, Low Water	1	1	1	1
	6.	4996-5	Pilot Light - Amber, Temperature	1	1	1	1
**	7.	6311-1	Knob Assembly (1-10)	1	1	1	1
		5975-2	Knob Assembly (°F)	1	1	1	1
		5976-2	Knob Assembly (°C)	1	1	1	1
	8.	3987-1	Bezel (4-TB05)	1	1	1	1
	9.	9126-1	Thermostat	1	1	1	1
	10.	9207-3	“O” Ring (2-230R)	1	1	1	1
	11.	4967-1	Pressure Gauge (3-PG00)	1	1	1	1

PARTS LIST, SELF-GENERATING STEAM FULL JACKET KETTLES,
ELT-F, EL-F, EP-F

	ITEM	PART NO.	DESCRIPTION	QUANTITY			
				20	30	40	60
	12.	3407-1	Pressure Gauge Mounting Plate (8-3097)	1	1	1	1
	13.	M50S-51618-58	Hex Bolt, 5/16 - 18 x 5/8" (1-66S4)	1	1	1	1
**	14.	3041-9	Bottom Cover, ELT-20F (8-2079)	1			
		3041-10	Bottom Cover, ELT-30F (8-2080)		1		
		3041-11	Bottom Cover, ELT-40F (8-2081)			1	
		3041-12	Bottom Cover, ELT-60F (8-2082)				1
		3041-3	Bottom Cover, EL-20F (8-2079-1)	1			
		3041-4	Bottom Cover, EL-30F (8-2080-1)		1		
		3041-5	Bottom Cover, EL-40F (8-2081-1)			1	
		3041-6	Bottom Cover, EL-60F (8-2082-2)				1
		7139-3	Bottom Cover, EP-20F	1			
		7139-4	Bottom Cover, EP-30F		1		
		7139-5	Bottom Cover, EP-40F			1	
		7139-6	Bottom Cover, EP-60F				1
	15.	9814-2	Connector, 1/4 cc x 1/4 FPT (3-664B)	1	1	1	1
	16.	9768-9	Connector, Thermostat (3-686C)	1	1	1	1
	17.	9768-5	Connector, 1/4 cc x 3/8 MPT (3-684C)	1	1	1	1
	18.	5514-2	Copper Tube, 1/4 x 28", 20 Gallon	1			
		5514-3	Copper Tube, 1/4 x 29", 30 Gallon		1		
		5514-4	Copper Tube, 1/4 x 33", 40 Gallon			1	
		5514-5	Copper Tube, 1/4 x 35", 60 Gallon				1
**	19.	9348-208	Contactor, 208 - 240V, 18 kW, 24 kW	2	2	2	2
		9348-208	Contactor, 380 - 600V, 18 kW, 24 kW	1	1	1	1
		9349-208	Contactor, 208 - 240V, 33 kW		2	2	2
		9349-208	Contactor, 380 - 600V, 33 kW		1	1	1
	20.	3974-2	Low Water Cut Off	1	1	1	1
**	21.	9002-1	Fuse Holder, 380 - 600V	2	2	2	2
		9001-7	Fuse, 2 Amp., 380V - 600V	2	2	2	2

PARTS LIST, SELF-GENERATING STEAM FULL JACKET KETTLES,
ELT-F, EL-F, EP-F

ITEM		PART NO.	DESCRIPTION	QUANTITY			
				20	30	40	60
		9092-3	Glass Fuse, 3A, 208-240V	2	2	2	2
		9068-1	Fuse Holder, 208-240V	2	2	2	2
		9092-3	Glass Fuse, Fuse 3A, 380/220V & 415/240V	1	1	1	1
		9068-1	Fuse Holder, 380/220V & 415/240V	1	1	1	1
**	22.	4-T251	Transformer, 380-220, 50/60 Hz, 100VA	1	1	1	1
		4-T251	Transformer, 415-220, 50/60 Hz, 100VA	1	1	1	1
		4-T255	Transformer, 480-240, 50/60 Hz, 100VA	1	1	1	1
		4-T260	Transformer, 600-240, 60 Hz, 100VA	1	1	1	1
	23.	5164-1	Transformer Fuse Block Mounting Bracket	1	1	1	1
**	24.	6161-3	Modular Terminal Assembly, 3 Pole	1	1	1	1
			Includes Following Parts:				
		9374-1	Modular Terminal, Grey	3	3	3	3
		9375-1	End Plate	1	1	1	1
		9369-1	End Clamp	2	2	2	2
		9368-079	Mounting Rail, 79 mm	1	1	1	1
		6161-4N	Modular Terminal Assembly, 4 Pole	1	1	1	1
			Includes Following Parts:				
		9374-1	Modular Terminal, Grey	3	3	3	3
		9374-2	Modular Terminal, Blue	1	1	1	1
		9375-1	End Plate	1	1	1	1
		9369-1	End Clamp	2	2	2	2
		9368-098	Mounting Rail, 98 mm	1	1	1	1
	25.	5885-1	Bracket, Level Control	1	1	1	1
**	26.	2782-1	Component Mounting Plate (8-2072)	1			
		2784-1	Component Mounting Plate (8-2073)		1		

PARTS LIST, SELF-GENERATING STEAM FULL JACKET KETTLES,
ELT-F, EL-F, EP-F

	ITEM	PART NO.	DESCRIPTION	QUANTITY			
				20	30	40	60
		2785-1	Component Mounting Plate (8-2074)			1	1
	27.	4-LLP1	Probe, 2-1/16 Lg.	1	1	1	1
	28.	5184-1	Extension, Relief Valve	1	1	1	1
	29.	3529-2	Safety Relief Valve, 50 psi (3-SRV9-1)	1	1	1	1
	30.	3-AV01	Air Vent Assembly	1	1	1	1
**	31.	6880-3	Control Box Cover, 20 Gallon (8-3030-2)	1			
		6880-4	Control Box Cover, 30 Gallon (8-3030-3)		1		
		6880-5	Control Box Cover, 40 Gallon (8-3030-4)			1	
		6880-6	Control Box Cover, 60 Gallon (8-3030-5)				1
*	32.	6561-4	Control Panel Decal	1			
		6561-5	Control Panel Decal		1		
		6561-6	Control Panel Decal			1	
		6561-7	Control Panel Decal				1
	33.	9012-4P	Street Elbow 90°, 3/4 NPT	2	2	2	2
**	34.	8234-1	Contactor Bracket, (208-240V)	1	1	1	1
		8369-1	Contactor Bracket (280-600V)	1	1	1	1
**	35.	6042-1	Contactor Plate, (208-240V)	1	1	1	1
		6126-1	Contactor Plate (310-600V)	1	1	1	1

* NOT SHOWN.

** SELECT AS REQUIRED.

PARTS LIST, SELF-GENERATING STEAM FULL JACKET KETTLES,
ELT-F, EL-F, EP-F

TILT CONSOLE PARTS

FIGURE 2

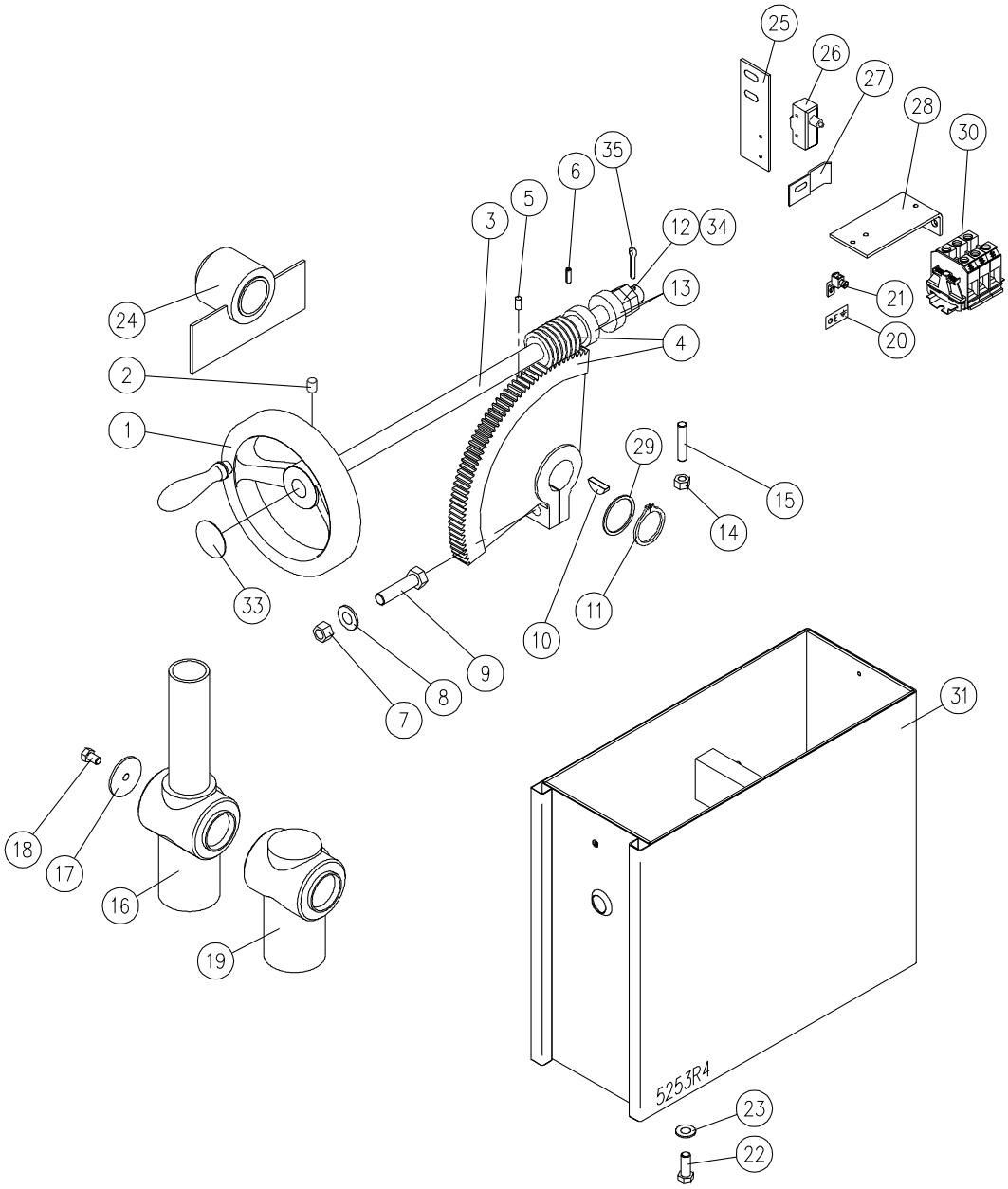

PARTS LIST, SELF-GENERATING STEAM FULL JACKET KETTLES,
ELT-F, EL-F, EP-F

FIGURE 2

ITEM	PART NUMBER	DESCRIPTION	QUANTITY
1.	8-2054	Hand Wheel	1
2.	S2102P-3816-12	Set Screw 3/8 -16 x 1/2", (1-72U4)	1
3.	6738-2	Tilt Shaft	1
4.	5393-1	Segment Gear & Worm Gear Kit (Includes items 5 to 11)	1
5.	S2101N-1420-12	Set Screw, 1/4 - 20 x ½" (1-52U4)	1
6.	9032-7	Tension Pin, 3/16" Diameter x 1-1/4" Length, (2-T6U5)	1
7.	HN01X-1213	Nut, 1/2 - 13, (1-99C0)	1
8.	F101X-12	Lock Washer, 1/2", (1-W4C0)	1
9.	M50X-1213-2	Bolt, 1/2 - 13 x 2", (2-96C8)	1
10.	5312-3	Key Woodruff, (1-K8U8)	1
11.	1-R315	Retaining Ring	1
12.	9029-22	Jam Nut (2-HN66)	2
13.	5327-1	Thrust Bearing	2
14.	HN01X-3816	Nut, 3/8 - 16 (1-79C0)	1
15.	S2101P-3816-134	Set Screw, 3/8 - 16 x 1-3/4", (2-72U7)	1
16.	8-2085EE	Outbore Bearing complete with extension - used on spring assist covers only - specify model.	1
17.	3962-1	Stainless Steel Washer (9-3197)	1
18.	M50S-51618-12	Bolt (9-3198)	1
19.	8-2085E	Outbore Bearing	1
20.	4188-1	Ground ID Tag (9-3104)	1
21.	4190-1	Ground Lug, (4-70EU)	1

FIGURE 2

ITEM	PART NUMBER	DESCRIPTION	QUANTITY
22.	M50C-3816-1	Bolt 3/8-16 x 1", (1-75C8)	4
23.	S01X-38	Lock Washer 3/8", (1-70C0)	4
24.	8-2090	Block Bearing	1
25.	4653-1	Micro Switch Bracket	1
26.	9228-1	Micro Switch (4-M605)	1
27.	4359-1	Micro Switch Activator Bracket	1
28.	4214-1	Terminal Block Bracket	1
29.	5259-1	Spacer, 1/16" Thick	As Required
30.	6161-3	Modular Terminal Assembly, 3 Pole	1
		Includes Following Parts:	
	9374-1	Modular Terminal, Grey	3
	9375-1	End Plate	1
	9369-1	End Clamp	2
	9368-079	Mounting Rail, 79 mm	1
	6161-4N	Modular Terminal Assembly, 4 Pole	1
		Includes Following Parts:	
	9374-1	Modular Terminal, Grey	3
	9374-2	Modular Terminal, Blue	1
	9375-1	End Plate	1
	9369-1	End Clamp	2
	9368-098	Mounting Rail, 98 mm	1
31.	2960-1	Console Assembly, ELT	1

PARTS LIST, SELF-GENERATING STEAM FULL JACKET KETTLES,
ELT-F, EL-F, EP-F

	ITEM	PART NUMBER	DESCRIPTION	QUANTITY
*	32.	M33S-1032-12	Screw, Console Cover, 10 - 32 x 1/2", (1-34S4)	1
	33.	5608-1	Decal - Tilt	1
	34.	5328-1	Washer, 3/4 ID x 1-1/4 OD	1
	35.	5329-1	Cotter Pin S.S. 3/16" x 1"	1

* NOT SHOWN.

PARTS LIST, SELF-GENERATING STEAM FULL JACKET KETTLES,
ELT-F, EL-F, EP-F

PARTS LIST

FIGURE 3

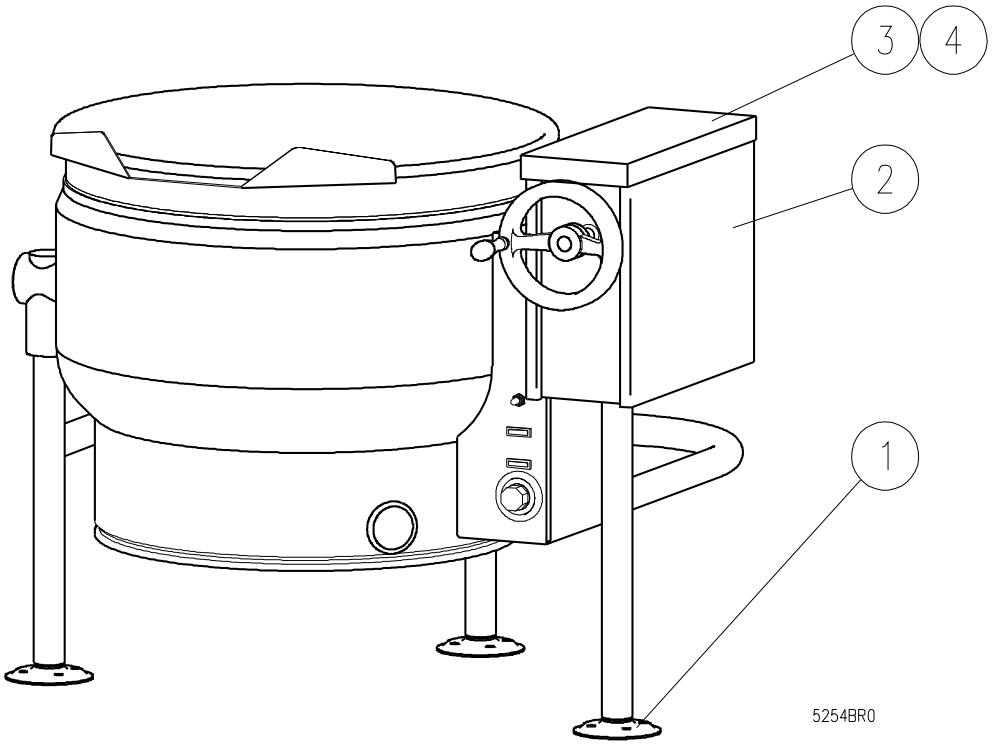

ELT-F

ITEM	PART NUMBER	DESCRIPTION	QUANTITY
1.	8-1308	Adjustable Flanged Foot	3
2.	2960-1	Console Box	1
3.	3534-1	Console Cover	1
4.	M33S-1032-12	Screw, 10 - 32 x 1/2", (1-34S4)	1

FIGURE 4

SPRING ASSIST HINGE ASSEMBLY

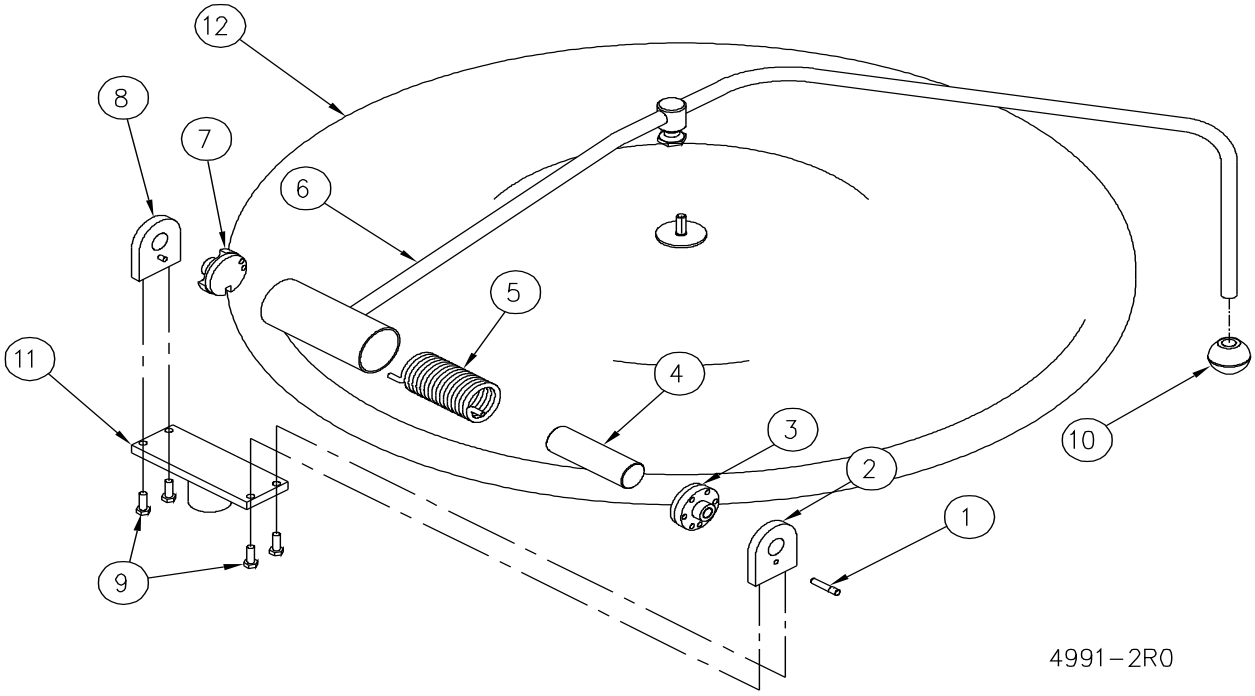

PARTS LIST, SELF-GENERATING STEAM FULL JACKET KETTLES,
ELT-F, EL-F, EP-F

FIGURE 4

ITEM	PART NUMBER	DESCRIPTION	QUANTITY
	9-3185	HINGE ASSEMBLY	
1.	3725-1	Lock Pin, (8-2029)	1
2.	3726-1	End Lock Plate, (8-2035L)	1
3.	5428-1	Stationary Disc	1
4.	5430-1	Core	1
5.	4008-1	Spring, (8-2026)	1
** 6.	4990-18	Handle Assembly, 20 Gallon Kettle (8-2028-2)	1
	4990-19	Handle Assembly, 30 Gallon Kettle (8-2027)	1
	4990-21	Handle Assembly, 40 Gallon Kettle (8-2027-1)	1
	4990-23	Handle Assembly, 60 Gallon Kettle (8-2027-2)	1
7.	5429-1	Rotary Disc	1
8.	3727-1	End Stop Plate, (8-2021)	1
9.	M68S-1420-34	Cap Screws, 1/4 - 20 x 3/4, Stainless Steel, (1-56S6)	4
10.	9147-1	Knob (2-KB01)	1
11.	4261-1	Mounting Plate Assembly - Tilting Models Only	1
** 12.	8985-4	Covers, 20 Gallon Kettle, (8-2005)	1
	8985-5	Covers, 30 Gallon Kettle, (8-2006)	1
	8985-6	Covers, 40 Gallon Kettle, (8-2007)	1
	8985-7	Covers, 60 Gallon Kettle, (8-2008)	1

** SELECT AS REQUIRED.

FIGURE 5

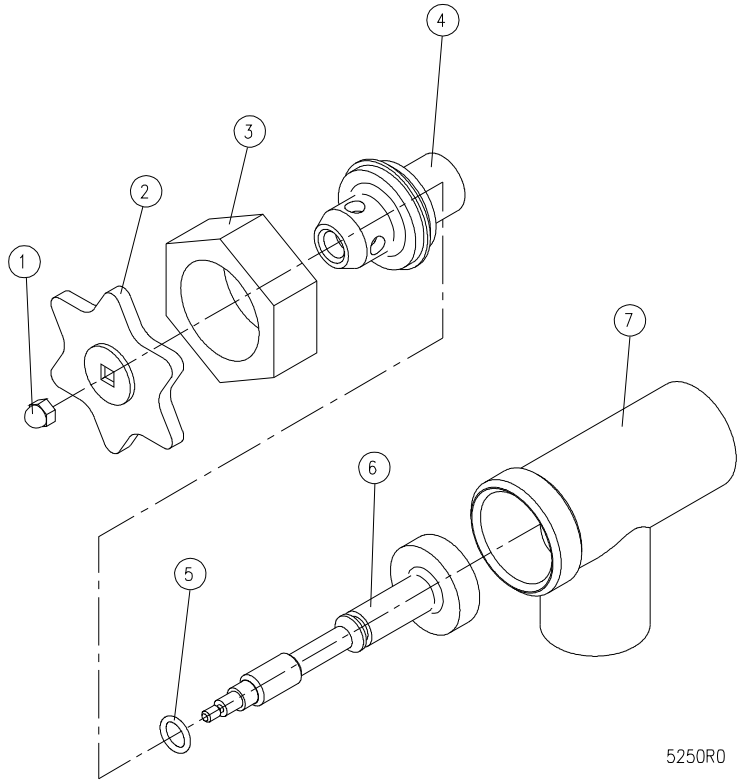

DRAW-OFF VALVE

ITEM	PART NUMBER	DESCRIPTION	QUANTITY
	4219-1	1 - 1/2" DRAW-OFF VALVE ASSEMBLY, (3-D015)	
1.	9031-3	Acorn Nut, 10-24 UNC	1
2.	4115-1	Handle, Stainless Steel	1
3.	4221-1	Gland Nut, (3-DV13)	1
4.	4220-1	Bonnet, (3-DV14)	1
5.	9287-1	“O” Ring, (3-DV16)	1
6.	4222-1	Stem Assembly, (3-DV15RV)	1
7.	4223-1	Valve Body, (3-DV17)	1

PARTS LIST, SELF-GENERATING STEAM FULL JACKET KETTLES,
ELT-F, EL-F, EP-F

ITEM	PART NUMBER	DESCRIPTION	QUANTITY
	4136-1	2" DRAW-OFF VALVE ASSEMBLY (3-D020)	
1.	9031-3	Acorn Nut, 10-24 UNC	1
2.	4115-1	Handle, Stainless Steel	1
3.	4216-1	Gland Nut (3-DV23)	1
4.	4215-1	Bonnet, (3-DV24)	1
5.	9207-1	“O” Ring, (3-DV26)	1
6.	4217-1	Stem Assembly, (3-DV25RV)	1
7.	4218-1	Valve Body, (3-DV27)	1

ITEM	PART NUMBER	DESCRIPTION	QUANTITY
	3995-1	3" DRAW-OFF VALVE ASSEMBLY, (3-D030)	
1.	3-DV31	Acorn Nut, 7/16-14 UNC	1
2.	3996-1	Handle, Stainless Steel, (3-DV32)	1
3.	3998-1	Gland Nut, (3-DV33)	1
4.	3997-1	Bonnet, (3-DV34)	1
5.	9411-1	“O” Ring, (3-DV36)	1
6.	3999-1	Stem Assembly, (3-DV35RV)	1
7.	4000-1	Valve Body, (3-DV37)	1