IMPORTANT FOR FUTURE REFERENCE

Please complete this information and retain this manual for the life of the equipment:

Model #: _____

Serial #: _____

Date Purchased: _____

INSTALLATION & OPERATION MANUAL

Electric Modular Skillets

EMTS-30 EMTS-40 EMTS-60

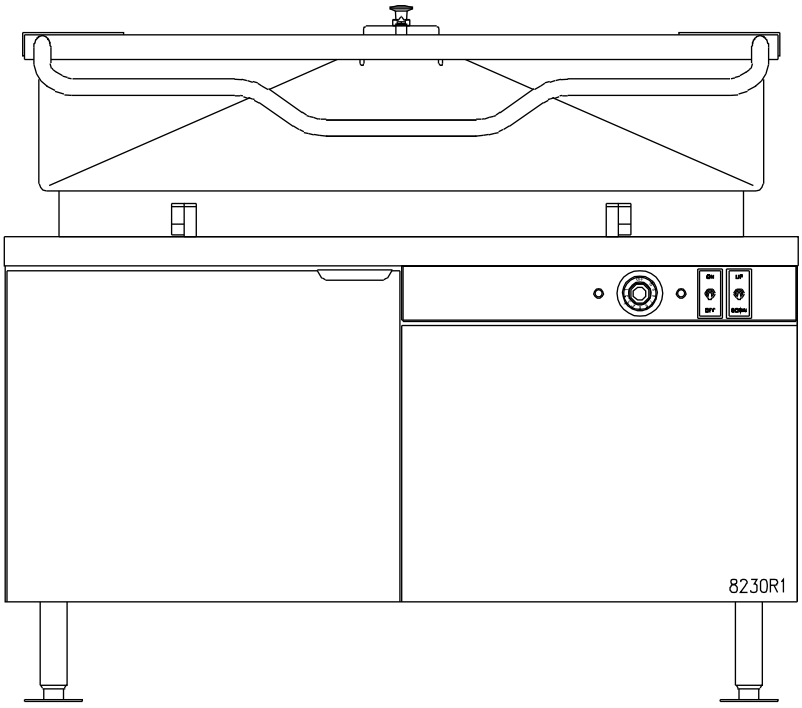

⚠ WARNING

Improper installation, adjustment, alteration, service or maintenance can cause property damage, injury or death. Read the installation, operating and maintenance instructions thoroughly before installing or servicing this equipment.

CROWN FOOD SERVICE EQUIPMENT

A Middleby Company

70 Oakdale Road, Downsview (Toronto) Ontario, Canada, M3N 1V9

Telephone: 919-762-1000 www.crownsteamgroup.com

Printed in Canada

MANUAL 10130R3

1.0 IMPORTANT NOTES FOR INSTALLATION AND OPERATION

	This is the safety alert symbol. It is used to alert you to potential personal injury hazards. Obey all safety messages that follow this symbol to avoid possible injury or death.

	WARNING: Improper installation, operation, adjustment, alteration, service or maintenance can cause property damage, injury or death. Read the installation, operating and maintenance instructions thoroughly before installing, operating or servicing this equipment.

Do not attempt to operate this unit in the event of a power failure.

Keep the appliance area free and clear from combustibles.

Do not obstruct the flow of combustion and ventilation air.

Adequate clearances must be maintained for safe and proper operation.

This manual should be retained for future reference.

It is recommended that this manual be read thoroughly and that all instructions be followed carefully.

TABLE OF CONTENTS

DESCRIPTION PAGE

1.0 Important Notes for Installation and Operation 2

2.0 Service Connections 4

3.0 Installation Instructions 6

4.0 Operation Instructions. 9

5.0 Cleaning Instructions 11

6.0 Cooking Temperatures 12

7.0 Maintenance, Hydraulic System 13

8.0 Adjustments and Controls 14

9.0 Troubleshooting. 15

Safety Data Sheets 18

2.0 SERVICE CONNECTIONS

⏚ – Electrical connection to be as specified on data plate.

Ⓒ – COLD WATER: Compression fitting for 5/8 O.D. copper tubing or 1/2 NPSM male.

Ⓗ – HOT WATER: Compression fitting for 5/8 O.D. copper tubing or 1/2 NPSM male.

ELECTRICAL RATINGS

		AMPS PER LINE							MIN. CLEARANCE	
MODEL	kW	PHASE	208V	220V	240V	380V	415V	480V	SIDES	BACK
EMTS-30	12	1	57.7	54.5	50.0	N/A	N/A	N/A	0	4 [102]
		3	33.3	31.5	28.9	18.2	16.7	14.4		
EMTS-40	18	1	86.5	81.8	75.0	N/A	N/A	N/A		
		3	50.0	47.2	43.3	27.3	25.0	21.7		

DIMENSIONS

MODEL	SHIPPING WT.	CAPACITY	UNITS	A	B	C	D	E	F	G	H	
											Ø2	Ø3
EMTS-30	617 lbs. [280 kg]	30 gallons	inches	36	30	72.38	33.5	23.5	40	3.75	42.63	46.5
		114 litres	*mm*	*914*	*762*	*1838*	*851*	*597*	*1016*	*95*	*1083*	*1181*
EMTS-40	770 lbs. [349 kg]	40 gallons	inches	48	42	71.75	42.88	23	40.38	4.75	42.63	46.5
		151 litres	*mm*	*1219*	*1067*	*1822*	*1089*	*584*	*1026*	*121*	*1083*	*1181*

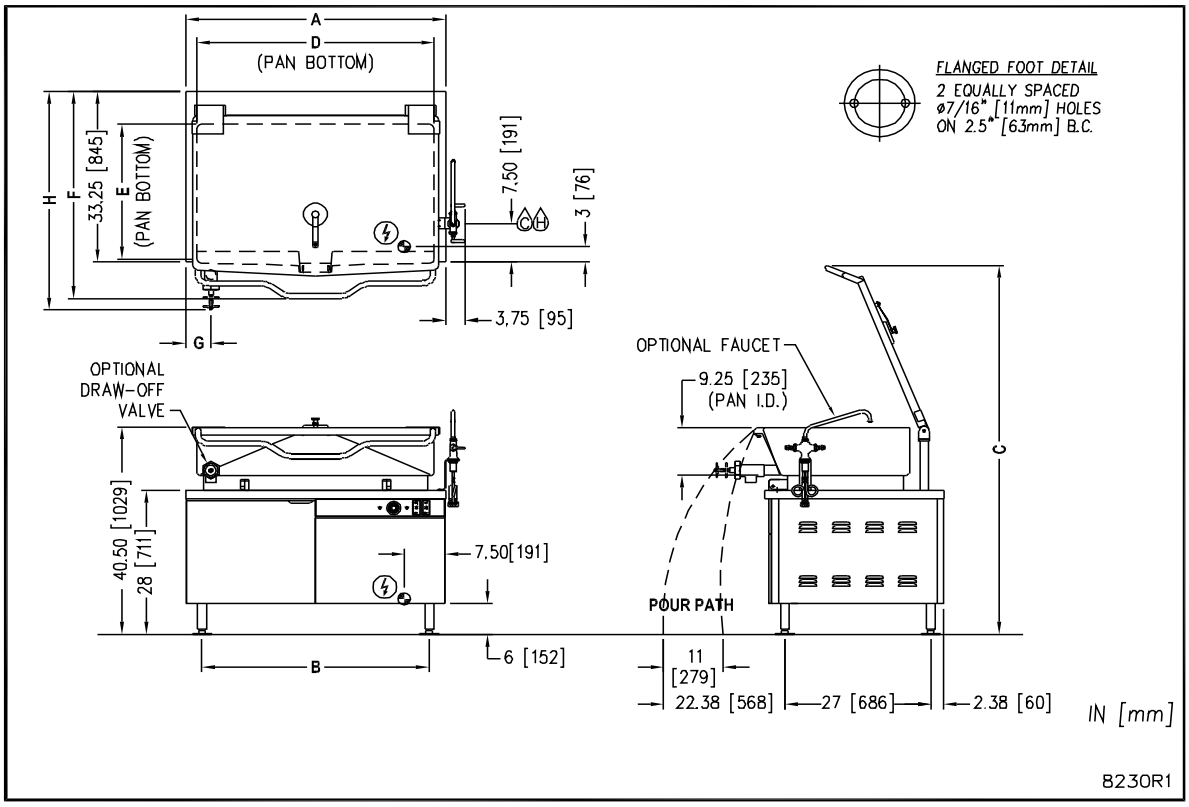

As continued product improvement is a policy of Crown, specifications are subject to change without notice.

Ⓔ – Electrical connection to be as specified on data plate.

Ⓒ – COLD WATER: Compression fitting for 5/8 O.D. copper tubing or 1/2 NPSM male.

Ⓗ – HOT WATER:: Compression fitting for 5/8 O.D. copper tubing or 1/2 NPSM male.

ELECTRICAL RATINGS

	AMPS PER LINE								MIN. CLEARANCE	
MODEL	kW	PHASE	208V	220V	240V	380V	415V	480V	SIDES	BACK
EMTS-60	18	1	86.5	81.8	75.0	N/A	N/A	N/A	0	4 [102]
		3	50.0	47.2	43.3	27.3	25.0	21.7		
	27	3	75.0	70.9	65.0	41.0	37.6	32.5		

DIMENSIONS

MODEL	SHIPPING WT.	CAPACITY	UNITS	A	B	C	D	E	F	G	H	
											Ø2	Ø3
EMTS-60	845 lbs. [384 kg]	60 gallons 227 litres	inches mm	48 1219	42.88 1089	77.5 1969	42.88 1089	23 584	42.25 1073	4.75 121	42.63 1083	46.5 1181

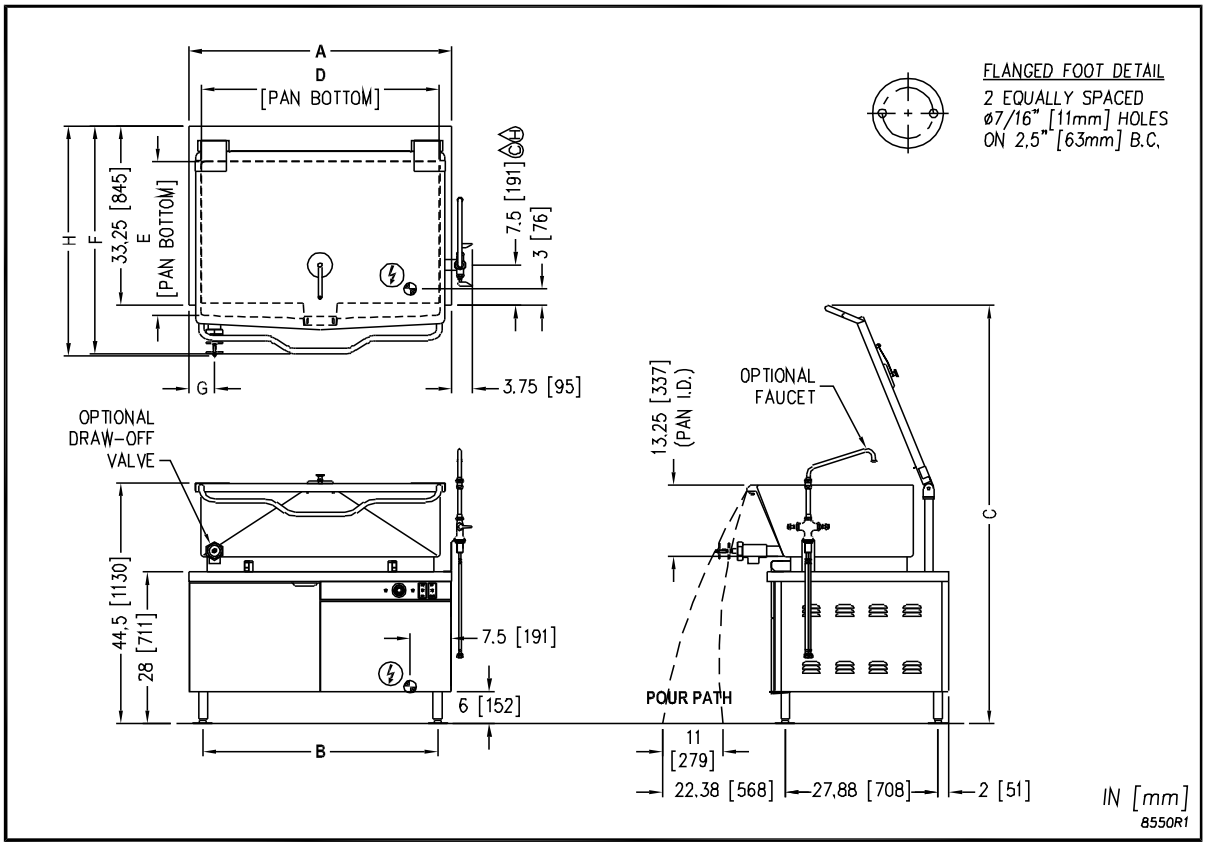

As continued product improvement is a policy of Crown, specifications are subject to change without notice.

3.0 INSTALLATION INSTRUCTIONS

UNPACKING

Immediately after unpacking, check for possible shipping damage. If the tilting braising pan is found to be damaged, save the packaging material and contact the carrier within 15 days of delivery.

Before installing, verify that the electrical service agrees with the specifications on the rating plate located on the left side panel as you face the front of the braising pan. If the supply and equipment requirements do not agree, contact your dealer or Crown Food Service Equipment Ltd.

LOCATION

The installation location must allow adequate clearances for servicing and proper operation. A minimum front clearance of 36" and rear clearance of 4" is required.

INSTALLATION CODES AND STANDARDS

Your Crown Tilting Braising Pan must be installed in accordance with:

1. In Canada, provincial and local codes, or in the absence of local codes, with: C.S.A. C22.1 Canadian Electrical Code, Part 1or in the U.S.A., U.L. 197 Standard.

2. In the U.S.A., state and local codes, or in absence of local codes, National Electrical Code ANSI/NFPA-70 (latest edition).

3. ANSI NFPA Standard #96, “Vapor Removal from Cooking Equipment,” (latest edition), available from the National Fire Protection Association, Batterymarch Park, Quincy, MA, U.S.A., 02269.

INSTALLATION INSTRUCTIONS (Continued)

LEVELLING AND ANCHORING TILTING BRAISING PAN

1. Place tilting braising pan in the installation position.
2. Place a carpenter's level on top of the braising pan and turn the adjustable feet to level braising pan side-to-side and front-to-back.
3. Mark hole locations on the floor through the anchoring holes provided in the rear flanged adjustable feet.
4. Remove tilting braising pan from installation position and drill holes in locations marked on the floor. (See installation diagram on page 4.) Insert proper anchoring devices (not supplied).
5. Place tilting braising pan back in the installation position.
6. Place carpenter's level on top of braising pan and re-level side-to-side and front-to-back.
7. Bolt and anchor tilting braising pan securely to the floor.
8. Seal bolts and flanged feet with silastic or equivalent compound.

ELECTRICAL CONNECTIONS

WARNING: Electrical and grounding connections must comply with the applicable portions of the National Electrical Code and/or other local codes.

ELECTRICAL CONNECTIONS (Continued)

WARNING: Before performing any maintenance disconnect the electrical power supply and place a tag at the disconnect switch to indicate that you are working on the circuit.

The wiring compartment is located behind the control panel. Refer to Page 4 Service Connections.

1. Remove the wiring compartment cover and make electrical connections per the wiring diagram located inside the control housing cover panel. The braising pan must be grounded in accordance with requirements of the National Electrical Code or applicable local codes. See warning (page 6). Connection from incoming lines must be waterproof.

2. Ground skillet to terminal provided in control housing. A wiring diagram is provided and is located inside the control cover panel.

3. Replace wiring compartment cover.

SERVICE CONNECTIONS

All internal wiring for the skillet is complete.

Make service connections as indicated on page 4 and Electrical Connections above.

If faucet is provided connect water supply and check for proper operation.

4.0 OPERATION INSTRUCTIONS

WARNING: The tilting braising pan and its parts are hot. Use care when operating, cleaning and servicing the tilting braising pan.

BEFORE FIRST USE

Using a non-corrosive, grease-dissolving commercial cleaner, to clean the protective metal oils from all surface parts and the interior of the tilting braising pan. Follow the cleaner manufacturer's directions. Rinse thoroughly and drain the pan. Wipe dry with a soft clean cloth.

CONTROLS:

TILT SWITCH - Push up to raise tilting braising pan; push down to lower tilting braising pan.

POWER SWITCH - Turns power on to the lift motor. Note: it is not necessary to have the power on when using the braising pan. Turn power on only when you intend to operate the tilt feature. This will save energy as well as prevent the motor from overheating.

AMBER LIGHT - Will light when the power is turned on to the lift motor.

THERMOSTAT- Turns tilting braising pan ON and maintains set temperature by controlling power supply. Temperature settings range from 1 to 10. (SEE COOKING GUIDELINES in this manual for temperature range for settings 1 - 10.)

RED TEMPERATURE LIGHT - Will light when heating elements are supplying heat to the tilting braising pan.

START-UP PROCEDURE

1. Ensure that the braising pan is in the DOWN position.

2. Turn THERMOSTAT dial to desired temperature. The red TEMPERATURE LIGHT will come on.

3. When braising pan has reached set temperature, the red TEMPERATURE LIGHT will go off and the heating elements will shut off. The heating elements will cycle on and off thereafter to maintain set temperature. The red TEMPERATURE LIGHT will be on when the heating elements are on, and off when the heating elements are off.

4. Preheat braising pan and allow it to cycle to equalize heat across the entire surface.

5. Water will boil faster with the lid down.

6. Turn THERMOSTAT to OFF when braising pan is not in use.

7. Turn power switch to motor OFF.

DAILY SHUTDOWN PROCEDURE

To turn tilting braising pan off, turn THERMOSTAT dial to OFF.

To turn power to tilt motor off, turn power switch to OFF.

TILTING THE BRAISING PAN

1. DO NOT try to tilt braising pan with lid down.

2. Turn power switch to the 'ON' position.

3. Make sure the receiving pan is in place.

4. To tilt braising pan, push and hold TILT SWITCH in the UP mode until desired pan position has been reached. The braising pan will empty when raised to the top tilt position.

   When the braising pan is raised 5° or more, the heating elements will be turned off automatically. The braising pan will not operate once the pan has been tilted.

5. Food is poured through the removable strainer (Figure 2) into a food receiving pan positioned under the lip of the pouring spout (Figure 2).

6. To lower braising pan, push and hold TILT SWITCH in the DOWN mode.

FIGURE 2

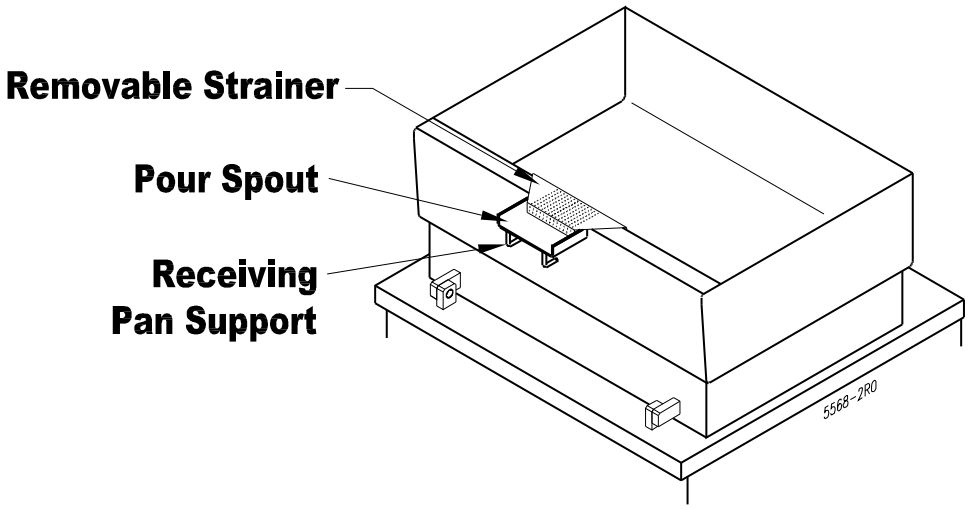

5.0 CLEANING INSTRUCTIONS

	WARNING: Disconnect electrical power supply before cleaning.

After each use, allow the tilting braising pan to cool before cleaning. Keep exposed cleanable areas of the tilting braising pan clean at all times. Do not get water in electrical box or on any electrical component.

1. Thoroughly wash pan, pouring spout, (see Figure 2) lid and exterior surfaces with mild detergent and warm water. If necessary, soak pan to remove food that is stuck to pan surface. Rinse thoroughly and wipe dry with a soft clean cloth.

2. Clean removable strainer and receiving pan support with mild detergent and warm water. Rinse thoroughly and wipe dry with a soft clean cloth.

6.0 COOKING TEMPERATURES

	Temperature (°F)	Thermostat Setting
Simmering	200 Maximum	1 - 4
Sautéing	225 - 275	5 - 6
Searing	300 - 350	7 - 8
Frying	325 - 375	8 - 9
Grilling	350 - 450	9 - 10

7.0 MAINTENANCE

	WARNING: The tilting braising pan and its parts are hot. Use care when operating, cleaning and servicing the tilting braising pan.

	WARNING: Disconnect electrical power supply and place a tag at the disconnect switch to indicate that you are working on the circuit before performing any maintenance.

HYDRAULIC SYSTEM

The hydraulic system has been adjusted and tested at the factory and no further adjustment should be needed. If the unit fails to operate properly, all service work must be performed by a qualified service agent.

MAINTENANCE

1. Hot oil in the Hydraulic System is one of the primary causes of poor operation. When the tilt system is not in use turn power switch off.

2. Inspect hydraulic hoses for wear and aging.

3. Check that fluid levels are kept full.

4. To replace oil, fill through filler breather.

5. Use proper oil as specified by factory. TYPE: AWH32 or equivalent.

6. Set up regular schedule for checking the oil temperature, hydraulic hoses and keeping the equipment clean. A thick layer of dirt acts as an insulation and prevents the hydraulic system from cooling properly.

8.0 ADJUSTMENTS AND CONTROLS

ADJUST PAN SPEED

There are three controls available on this power unit. The first is an adjustable relief valve mounted into the custom aluminum manifold block. The other two control the linear speed of the actuator.

RELIEF VALVE

The relief valve is located underneath an aluminum hexagon cover on the side of the custom manifold block. This relief valve is factory set to 825 P.S.I. and locked and should not be adjusted.

If adjustments are necessary, remove the hexagon cover which will give access to the relief valve screw. With the pump running, and with a suitable flat blade style screwdriver, rotate the screw clockwise to increase pressure, and anti clockwise to decrease pressure. While this operation is being carried out some oil will leak down the threads of the adjusting screw.

To obtain the pressure required, a pressure gauge will have to be located in the circuit. The best location is on the cylinder hose. To set the pressure, energize the solenoid to extend the cylinder fully and thus “deadhead” the system. The pressure can be set as indicated above. When adjustment is complete, replace the hexagon cover. This will seal the relief valve area. The actual factory set pressure is noted on the label and should not be exceeded as this affects the HP draw on the electric motor.

FLOW CONTROL

There are two flow control valves mounted on the power unit and located on the solenoid valve subplate. The flow control valves will restrict the capacity of oil passing through them when the knurled knob is screwed in - in a clockwise direction. This action will reduce the linear speed of the cylinder. Turning the flow control valve adjustment in the opposite direction - anti clockwise, will increase the speed of the cylinder. One flow control valve (right side) will allow adjustment of the extension speed (travel speed should be set at minimum 20 seconds), the other (left side) the retraction speed. (Retraction speed should be set at minimum 10 seconds).

IMPORTANT

It should be noted that if the cylinder speed is restricted by the flow control valves, the balance of oil not delivered to the cylinder will go over the relief @ 825 P.S.I. which will cause unwanted heat in the reservoir.

9.0 TROUBLESHOOTING

BRAISING PAN

HEATING ELEMENTS DO NOT COME ON:

1. Power supply not “ON”.
2. Pan not in down position.
3. Defective limit switch.
4. Defective thermostat.
5. Defective elements or loose terminals.
6. Defective contactors.

BRAISING PAN WILL NOT OPERATE (UP OR DOWN):

1. Power supply not “ON”.
2. Defective UP/DOWN switch.
3. SEE TROUBLESHOOTING - HYDRAULICS (below).

TROUBLESHOOTING - HYDRAULICS

1. DIRTY OIL:
    1) Components not properly cleaned after servicing.
    2) Inadequate screening in fill pipe.
    3) Air breather left off.
    4) Filter dirty or ruptured.

TROUBLESHOOTING - HYDRAULICS (Continued)

2. FOAMING OIL:

    1) Return of tank line not below fluid level.

    2) Fluid contamination.

    3) Suction leak to pump.

3. MOISTURE IN OIL:

    1) Fill pipes left open.

    2) Moisture in cans used to replace oil in tank.

    3) Extreme temperature differential.

4. OVERHEATING OF SYSTEM:

    1) Continuous operation at relief setting.

    2) Excessive slippage or internal leakage.

    3) Fluid viscosity too high or low.

    4) Hose I.D. too small causing high velocity.

    5) Improper air circulation around reservoir.

    6) System relief valve set too high.

    7) Power unit operating in direct sunlight or ambient temperature is too high.

5. PUMP MAKES EXCESSIVE NOISE:

    1) Check for vacuum leaks in suction line.

    2) Vacuum leak at pump shaft seal.

    3) Check alignment with drive mechanism. Misalignment will cause wear and subsequent high noise level operation.

TROUBLESHOOTING - HYDRAULICS (Continued)

4) Relief valve set too high.

5) Aeration of fluids in reservoir (return line above fluid level).

6) Worn cam ring, damaged gear or faulty bearing.

7) Reversed rotation.

8) Plugged lines.

9) Oil viscosity too high or temperature too low.

10) Loose or worn pump parts.

11) Pump housing bolts loose or not properly torqued.

6. SOLENOID VALVES:

1) Voltage too low.

2) Short circuit, open connection.

3) Wrong voltage.

4) Foreign matter in fluid causing valves to stick or plug.

SAFETY DATA SHEET

Revision Date 05-04-2018 **Version** 5

SECTION 1: IDENTIFICATION OF THE SUBSTANCE/MIXTURE AND OF THE COMPANY/UNDERTAKING

Product identifier

Product Code(s) 07122000-M
Product Name COSMOLUBRIC HF-122

Recommended Use Fire-resistant hydraulic fluid
Uses advised against Any other purpose.

Manufacturer, Importer, Supplier

Houghton International Inc.
Madison & Van Buren Aves.
Valley Forge, PA 19482
Telephone: 610-666-4000 FAX: 610-666-1376
Website: www.houghtonintl.com
Customer Service: 888-459-9844

Houghton Canada
915 Meyerside Drive
Mississauga
ON
L5T 1R8

Houghton Mexico S.A. de C.V.
Efraín Gonzalez Luna, 2007 Depto19
Col. Americana, Guadalajara,
Jalisco CP. 44160,
Mexico
Phone: +52-333-615-9331

Emergency telephone number

United States of America/Canada : 3E Company - 1-866-519-4752 (Code 333938)
Mexico : 3E Company - +52 55 41696225 (Code 333938)

SECTION 2: HAZARDS IDENTIFICATION

Classification

This product is not considered hazardous by the 2012 OSHA Hazard Communication Standard (29 CFR 1910.1200) and the Workplace Hazardous Materials Information System (WHMIS) 2015

Not classified

Label elements

The product contains no substances which at their given concentration, are considered to be hazardous to health

Precautionary Statements

Precautionary Statements - Response

Hazards not otherwise classified (HNOC)

Health Not Applicable.
Physical Not Applicable.

Other Information
Not applicable

SECTION 3: COMPOSITION/INFORMATION ON INGREDIENTS

The product contains no substances known to be hazardous to health in concentrations which need to be taken into account.

SECTION 4: FIRST AID MEASURES

Description of first-aid measures

General advice	If symptoms persist, call a physician.
Inhalation	Move to fresh air.
Skin contact	Wash off immediately with soap and plenty of water. Remove and wash contaminated clothing before re-use.
Eye contact	Rinse thoroughly with plenty of water, also under the eyelids. Keep eye wide open while rinsing.
Ingestion	Clean mouth with water and afterwards drink plenty of water. Do not induce vomiting without medical advice.
Protection of First-aiders	Use personal protective equipment.

Most important symptoms and effects, both acute and delayed

Main Symptoms	None

Indication of immediate medical attention and special treatment needed

Notes to physician	Treat symptomatically.

SECTION 5: FIRE FIGHTING MEASURES

Extinguishing media

Suitable Extinguishing Media
Use extinguishing measures that are appropriate to local circumstances and the surrounding environment:, Use CO2, dry chemical, or foam, Water spray or fog

Extinguishing media which shall not be used for safety reasons
None

Special hazards arising from the substance or mixture

Special Hazard
This material creates a fire hazard because it floats on water.

Hazardous decomposition products
None under normal use

Advice for firefighters

Special protective equipment for fire-fighters
As in any fire, wear self-contained breathing apparatus pressure-demand, MSHA/NIOSH (approved or equivalent) and full

protective gear

SECTION 6: ACCIDENTAL RELEASE MEASURES

Personal precautions, protective equipment and emergency procedures

Ensure adequate ventilation.

Advice for non-emergency personnel Material can create slippery conditions.

Advice for emergency responders For personal protection see section 8.

Environmental precautions

Prevent further leakage or spillage if safe to do so. Do not flush into surface water or sanitary sewer system.

Methods and materials for containment and cleaning up

Soak up with inert absorbent material (e.g. sand, silica gel, acid binder, universal binder, sawdust). Dike to collect large liquid spills. After cleaning, flush away traces with water.

Reference to other sections

See Section 8/12/13 for additional information

SECTION 7: HANDLING AND STORAGE

Precautions for safe handling

Ensure adequate ventilation. Use only in area provided with appropriate exhaust ventilation. Handle in accordance with good industrial hygiene and safety practice.

Conditions for safe storage, including any incompatibilities

Technical measures/Storage conditions
Keep container tightly closed in a dry and well-ventilated place. Keep at temperatures between 5 and 40 °C.

Recommended Shelf Life
Shelf life 24 months.

Incompatible materials
Strong oxidizing agents, Strong acids, Strong bases

Specific end uses

Specific use(s) Fire-resistant hydraulic fluid

SECTION 8: EXPOSURE CONTROLS/PERSONAL PROTECTION

Control parameters

Exposure Guidelines This product does not contain any hazardous materials with occupational exposure limits established by the region specific regulatory bodies.

Exposure controls

Engineering Measures	Showers Eyewash stations Ventilation systems.

Individual protection measures, such as personal protective equipment

Eye/Face Protection	Safety glasses with side-shields.
Skin and body protection	Wear protective gloves/clothing.
Respiratory protection	No special protective equipment required. In case of mist, spray or aerosol exposure wear suitable personal respiratory protection and protective suit.
Hygiene measures	Handle in accordance with good industrial hygiene and safety practice.

SECTION 9: PHYSICAL AND CHEMICAL PROPERTIES

Information on basic physical and chemical properties

Physical state	liquid	**Appearance**	clear , amber
Odor	bland	**Odor threshold**	Not Determined

Property	Values	Remarks
pH	Not applicable	
Melting point / freezing point	-33 °C / -27 °F	
Boiling point / boiling range	Not Determined	
Flash point	> 319 °C / > 606 °F	Cleveland Open Cup
Evaporation rate	Not Determined	
Flammability (solid, gas)	Not Determined	
Flammability Limit in Air		
Upper flammability limit:	Not Determined	
Lower flammability limit:	Not Determined	
Vapor pressure	Not Determined	
Vapor density	Not Determined	
Relative density	0.917	g/cm3 @20°C
Solubility(ies)	Insoluble in water	
Partition coefficient	Not Determined	
Autoignition temperature	Not Determined	
Decomposition temperature	Not Determined	
Kinematic viscosity	>= 49.53 cSt @ 40 °C	ASTM D 445
Explosive properties	Not applicable	
Oxidizing Properties	Not applicable	

Other Information

Viscosity, kinematic (100°C)	Not Determined
Pour Point	-33 °C / -27 °F
VOC Content (ASTM E-1868-10)	Not Determined
VOC content	Not Determined

SECTION 10: STABILITY AND REACTIVITY

Reactivity

None under normal use conditions

Chemical stability

Stable under normal conditions

Possibility of hazardous reactions

None under normal use conditions

Conditions to avoid

Keep away from open flames, hot surfaces and sources of ignition

Incompatible materials

Strong oxidizing agents, Strong acids, Strong bases

Hazardous decomposition products

None under normal use conditions

SECTION 11: TOXICOLOGICAL INFORMATION

Information on likely routes of exposure

Product Information	There is no data available for this product.
Inhalation	Based on available data, the classification criteria are not met
Eye contact	Based on available data, the classification criteria are not met
Skin contact	Based on available data, the classification criteria are not met
Ingestion	Based on available data, the classification criteria are not met
Component Information	Non-hazardous ingredients

Information on toxicological effects

Symptoms	No information available.

Delayed and immediate effects as well as chronic effects from short and long-term exposure

Skin corrosion/irritation	Based on available data, the classification criteria are not met.
Serious eye damage/eye irritation	Based on available data, the classification criteria are not met
Sensitization	Based on available data, the classification criteria are not met.
Germ cell mutagenicity	Based on available data, the classification criteria are not met.
Carcinogenicity	Based on available data, the classification criteria are not met.
Reproductive toxicity	Based on available data, the classification criteria are not met.
Specific target organ toxicity (single exposure)	Based on available data, the classification criteria are not met.
Specific target organ toxicity (repeated exposure)	Based on available data, the classification criteria are not met.
Aspiration hazard	Based on available data, the classification criteria are not met.

SECTION 12: ECOLOGICAL INFORMATION

Ecotoxicity

No special environmental measures are necessary

Persistence and degradability	No information available.
Bioaccumulation	No information available
Mobility	The product is insoluble and floats on water. Is not likely mobile in the environment due its low water solubility.
Other adverse effects	No information available

SECTION 13: DISPOSAL CONSIDERATIONS

Waste treatment methods

Waste Disposal Methods	Dispose of in accordance with federal, state and local regulations.
Contaminated packaging	Observe all label precautions until container is cleaned, reconditioned or destroyed.

SECTION 14: TRANSPORT INFORMATION

DOT	Not Regulated
TDG	Not Regulated
MEX	Not Regulated
IATA	Not Regulated
IMDG	Not Regulated

SECTION 15: REGULATORY INFORMATION

International Inventories

Inventory information may be utilizing alternative CAS#s or exemptions beyond those stated within this document For further information, please contact: ProductStewardship@houghtonintl.com

TSCA	Complies
DSL	Complies
AICS	Complies
PICCS	Complies
KECL	Complies
IECSC	Complies
ENCS	Does not Comply
TCSI	Complies
NZIoC	Does not Comply

Legend:

TSCA - United States Toxic Substances Control Act Section 8(b) Inventory
DSL/NDSL - Canadian Domestic Substances List/Non-Domestic Substances List
AICS - Australian Inventory of Chemical Substances
PICCS - Philippines Inventory of Chemicals and Chemical Substances
KECL - Korean Existing and Evaluated Chemical Substances
IECSC - China Inventory of Existing Chemical Substances
ENCS - Japan Existing and New Chemical Substances
TCSI - Taiwan National Existing Chemical Inventory
NZIoC - New Zealand Inventory of Chemicals

U.S. Federal Regulations

SARA 313
Section 313 of Title III of the Superfund Amendments and Reauthorization Act of 1986 (SARA). This product does not contain any chemicals which are subject to the reporting requirements of the Act and Title 40 of the Code of Federal Regulations, Part 372.

SARA 311/312 Hazard Categories
- No EPCRA 311/312 hazards

Clean Water Act
This product does not contain any substances regulated as pollutants pursuant to the Clean Water Act (40 CFR 122.21 and 40 CFR 122.42).

CERCLA
To the best of our knowledge, this product does not contain chemicals at levels which require reporting under this regulation, Comprehensive Environmental Response Compensation and Liability Act (CERCLA) (40 CFR 302) or the Superfund Amendments and Reauthorization Act (SARA) (40 CFR 355). There may be specific reporting requirements at the local, regional, or state level pertaining to releases of this material.

U.S. State Regulations

SCAQMD Rule 1144
This product has not been tested for VOC content by the ASTM E-1868-10 method and is not approved for sale or distribution in the SCAQM District of California if the product is used as a metal forming, metal removal, metal treating, metal protection fluid or as a direct-contact lubricant.

California Proposition 65
This product does not contain any Proposition 65 chemicals.

International Regulations

Ozone-depleting substances (ODS)
Not applicable

Persistent Organic Pollutants
Not applicable

Chemicals Subject to Prior Informed Consent (PIC)
Not applicable

Other Information
Not applicable

SECTION 16: OTHER INFORMATION

07122000-M - COSMOLUBRIC HF-122 **Revision Date** 05-04-2018

NFPA	Health hazards 0	Flammability 1	Instability 0	Physical and chemical properties -

Key or legend to abbreviations and acronyms used in the safety data sheet

STOT SE - Specific target organ systemic toxicity (Single exposure)
STOT RE - Specific target organ systemic toxicity (repeated exposure)
VOC - Volatile organic compounds
NIOSH IDLH: Immediately Dangerous to Life or Health

Revision Date 05-04-2018

Revision Note This SDS has been revised in the following section(s), 2, 3, 8, 11

Disclaimer

The information provided in this Safety Data Sheet is correct to the best of our knowledge, information and belief at the date of its publication. The information given is designed only as a guidance for safe handling, use, processing, storage, transportation, disposal and release and is not to be considered a warranty or quality specification. The information relates only to the specific material designated and may not be valid for such material used in combination with any other materials or in any process, unless specified in the text.

End of Safety Data Sheet