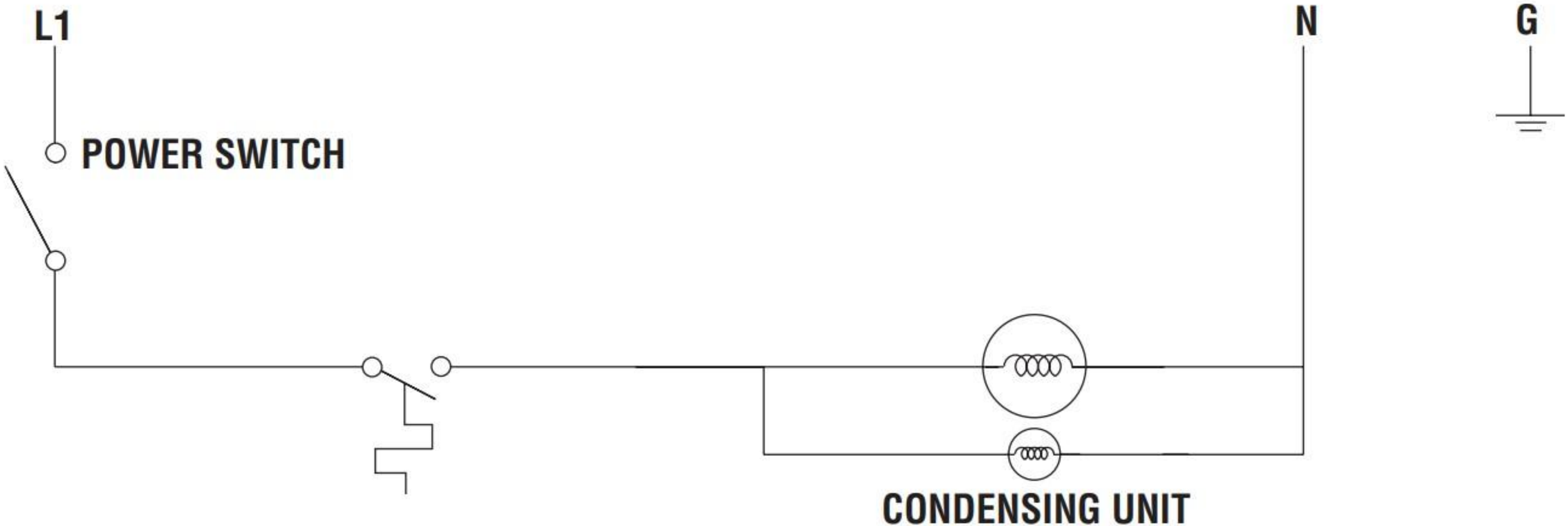
L1
N
G
POWER SWITCH
CONDENSING UNIT

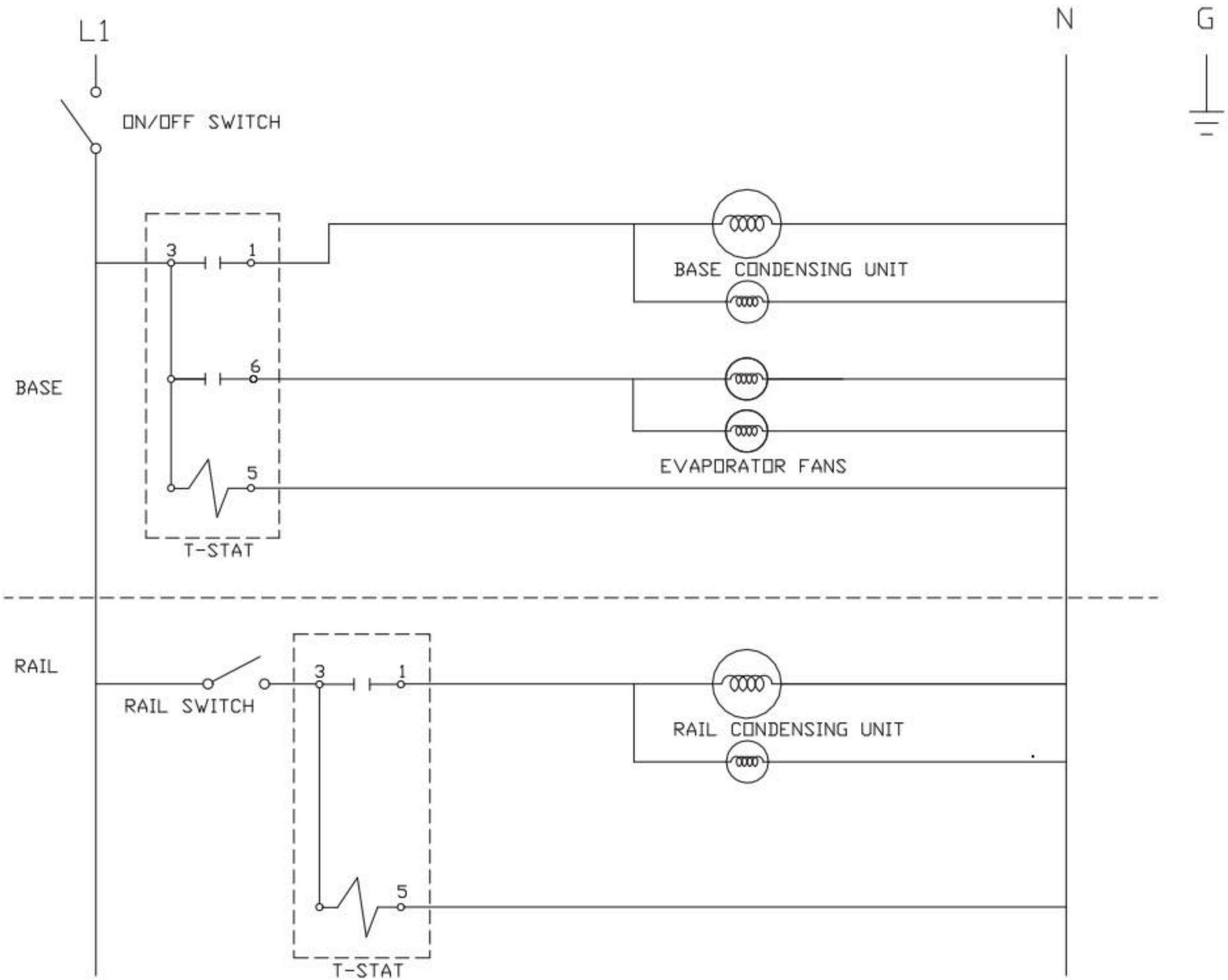
L1
N
G
ON/OFF SWITCH
BASE
3
1
6
5
T-STAT
BASE CONDENSING UNIT
EVAPORATOR FANS
RAIL
RAIL SWITCH
3
1
5
T-STAT
RAIL CONDENSING UNIT

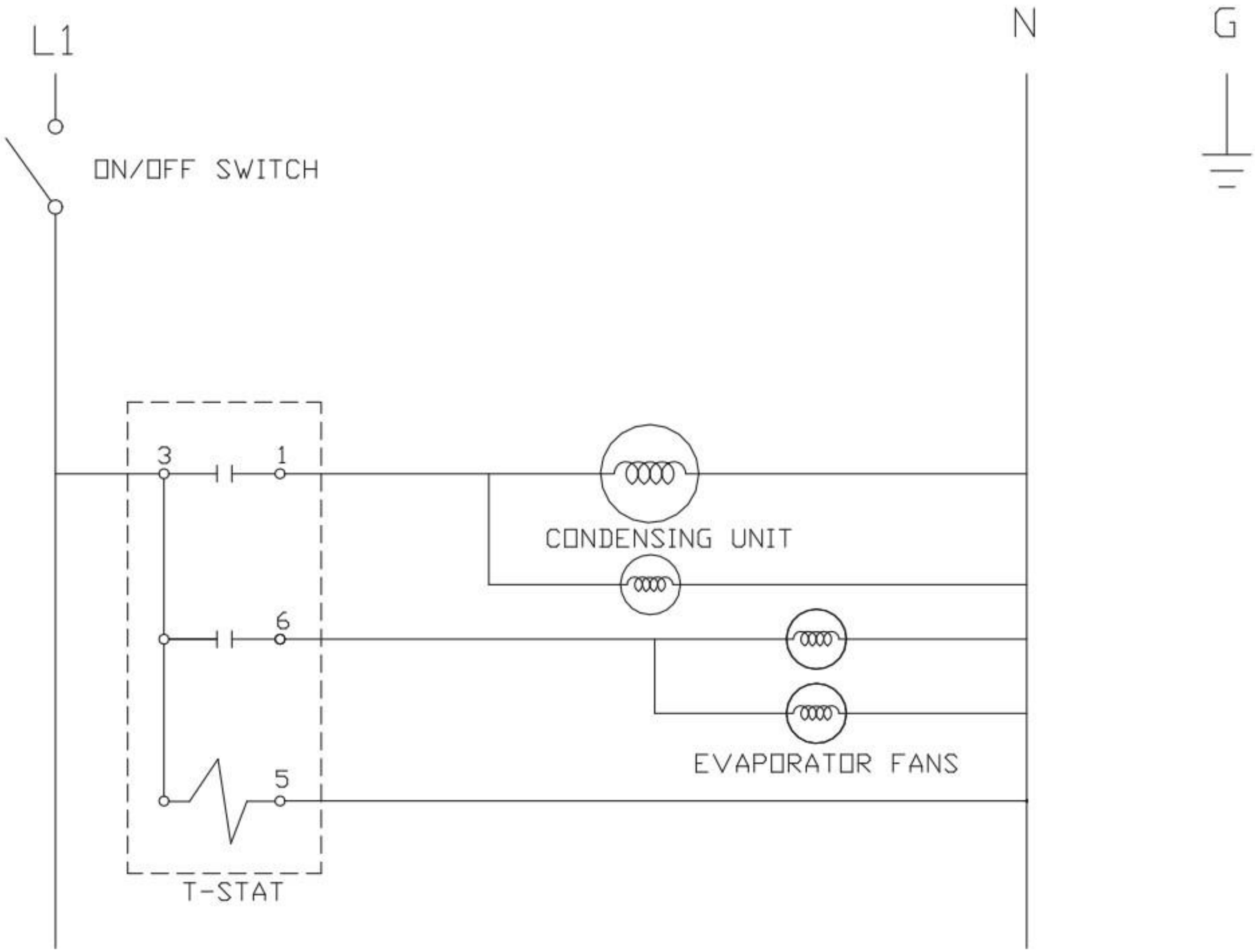
L1
N
G
ON/OFF SWITCH
3
1
CONDENSING UNIT
6
EVAPORATOR FANS
5
T-STAT

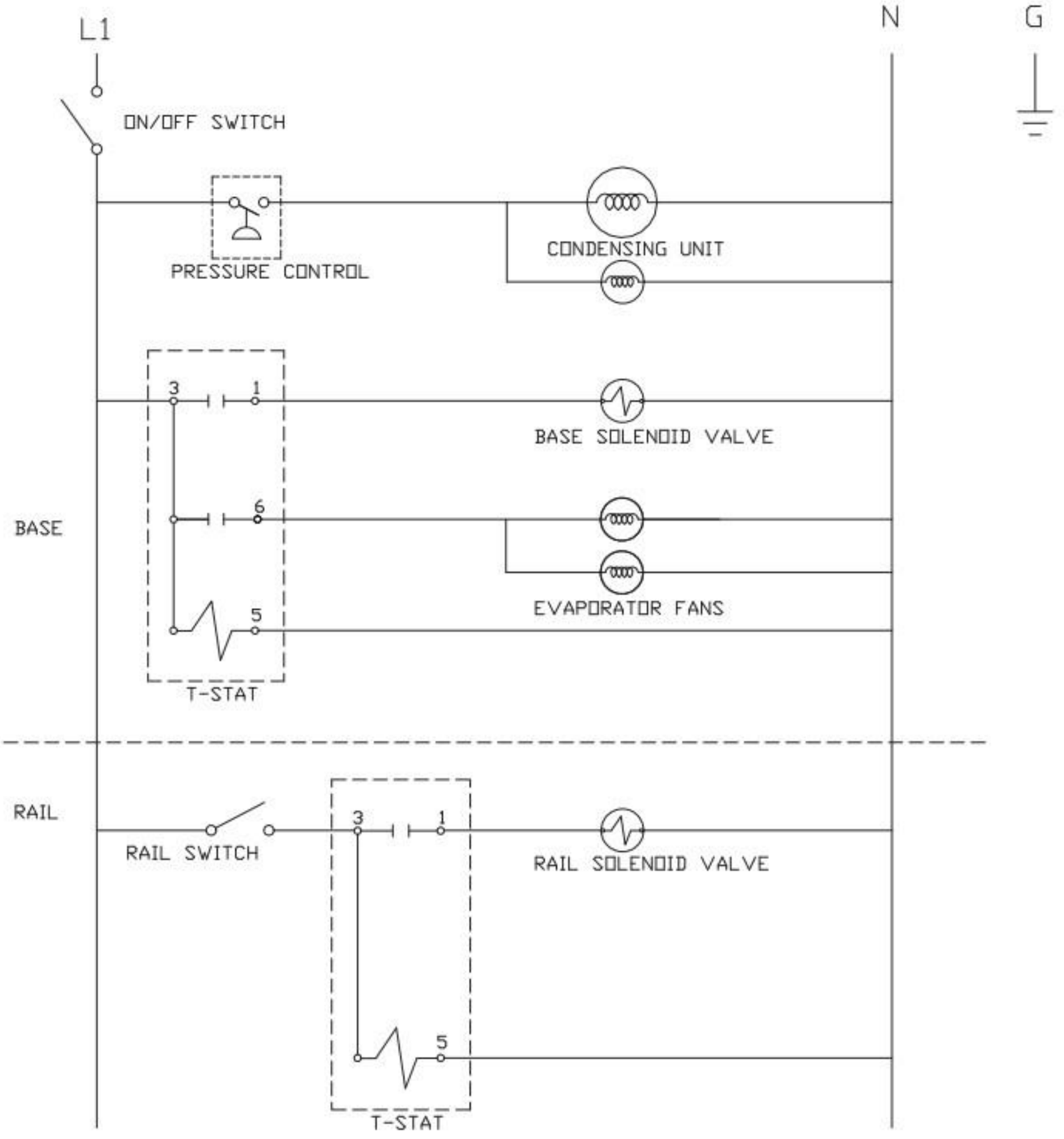
L1
N
G
ON/OFF SWITCH
PRESSURE CONTROL
CONDENSING UNIT
3
1
BASE SOLENOID VALVE
6
BASE
EVAPORATOR FANS
5
T-STAT
RAIL
RAIL SWITCH
3
1
RAIL SOLENOID VALVE
5
T-STAT

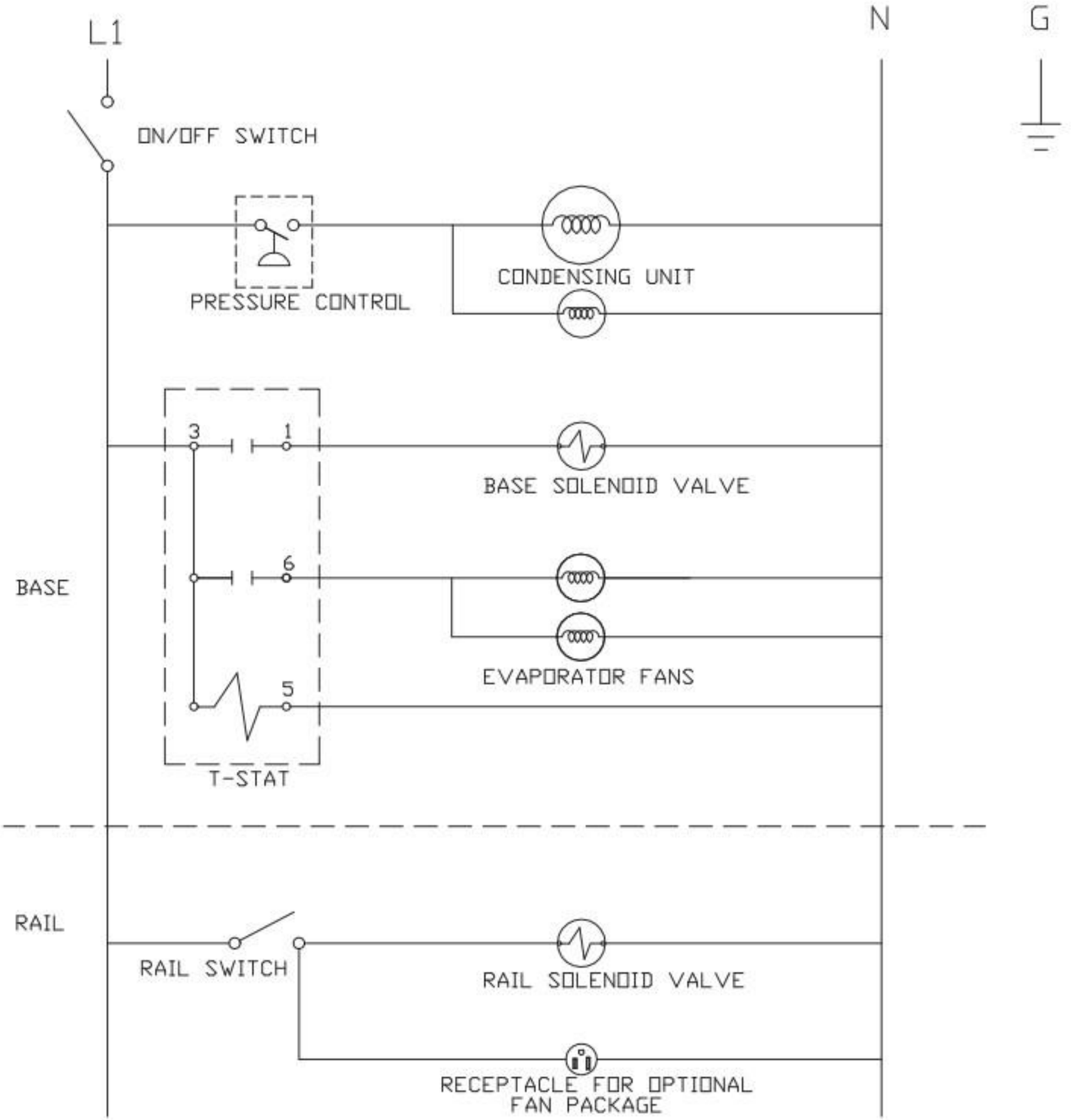
L1
N
G
ON/OFF SWITCH
PRESSURE CONTROL
CONDENSING UNIT
3
1
BASE SOLENOID VALVE
6
BASE
EVAPORATOR FANS
5
T-STAT
RAIL
RAIL SWITCH
RAIL SOLENOID VALVE
RECEPTACLE FOR OPTIONAL
FAN PACKAGE