Delfield

# F2000 and F17 Series Equipment Stands

## Service, Installation and Care Manual

Please read this manual completely before attempting to install or operate this equipment! Notify carrier of damage! Inspect all components immediately. See page 2.

### Warning

To assure proper operation a 2" airspace must be maintained between the lowest part of any cooking equipment and the top of this unit. Cooking equipment must have a barrier (i.e. bottom, drip pan) between its heat source and the top of the equipment stand. Failure to comply with this could severely damage the equipment stand and void all warranties.







CAUTION

**Important Information**
**Read Before Use**
**Please Save These Instructions!**

July 2012

# Important Warning And Safety Information



WARNING Read This Manual Thoroughly Before Operating, Installing, Or Performing Maintenance On The Equipment.



WARNING Failure To Follow Instructions In This Manual Can Cause Property Damage, Injury Or Death.



WARNING Do Not Store Or Use Gasoline Or Other Flammable Vapors Or Liquids In The Vicinity Of This Or Any Other Appliance.



WARNING Unless All Cover And Access Panels Are In Place And Properly Secured, Do Not Operate This Equipment.



WARNING This Appliance Is Not Intended For Use By Persons Who Lack Experience Or Knowledge, Unless They Have Been Given Supervision Or Instruction Concerning Use Of The Appliance By A Person Responsible For Their Safety.



WARNING This Appliance Is Not To Be Played With.



WARNING Do Not Clean With Water Jet.



WARNING Do Not Use Electrical Appliances Inside The Food Storage Compartment Of This Appliance.



CAUTION Observe the following:

- Minimum clearances must be maintained from all walls and combustible materials.
- Keep the equipment area free and clear of combustible material.
- Allow adequate clearance for air openings.
- Operate equipment only on the type of electricity indicated on the specification plate.
- Unplug the unit before making any repairs.
- Retain this manual for future reference.

## Contents

Receiving And Inspecting .....3
F2000 Specifications.....4
F17 Specifications.....5
Installation ..... 6-7
Operation .....7
Temperature Control Settings .....8
Maximum Cooking Equipment Weight Capacity .....8
Maintenance..... 9-10
Refrigerator Wiring Diagrams .....11
Freezer Wiring Diagrams .....12
Replacement Parts by Model ..... 13-16
Condensing Unit Assemblies ..... 17-18
Evaporator Coil Assemblies .....19
Drawer Assemblies .....20
Replacement Part Prints .....21
Standard Labor Guidelines.....22
Warranties..... 23-25
Notes ..... 26-27

## Serial Number Location

The serial number on remote models is located behind the 6" (15cm) stainless steel panel.

The serial number on self-contained models is located in the compressor housing.

The serial number tag shows the refrigerant used and the amount of charge and amperage.

Always have the serial number of your unit available when calling for parts and service.

©2012 The Delfield Company. All rights reserved. Reproduction without written permission is prohibited. "Delfield" is a registered trademark of The Delfield Company.

## Regulatory Certifications

All models are certified by:

National Sanitation Foundation (NSF)

Refrigerated models are certified by:

Underwriters Laboratories (UL)

## Receiving and Inspecting the Equipment

Even though most equipment is shipped crated, care should be taken during unloading so the equipment is not damaged while being moved into the building.

1. Visually inspect the exterior of the package and skid or container. Any damage should be noted and reported to the delivering carrier immediately.
2. If damaged, open and inspect the contents with the carrier.
3. In the event that the exterior is not damaged, yet upon opening, there is concealed damage to the equipment notify the carrier. Notification should be made verbally as well as in written form.
4. Request an inspection by the shipping company of the damaged equipment. This should be done within 10 days from receipt of the equipment.
5. Check the lower portion of the unit to be sure legs or casters are not bent.
6. Also open the compressor compartment housing and visually inspect the refrigeration package. Be sure lines are secure and base is still intact.
7. Freight carriers can supply the necessary damage forms upon request.
8. Retain all crating material until an inspection has been made or waived.

### Uncrating the Equipment

First cut and remove the banding from around the crate. Remove the front of the crate material, use of some tools will be required. If the unit is on legs remove the top of the crate as well and lift the unit off the skid. If the unit is on casters it can be "rolled" off the skid.

# F2000 Specifications

| **Self Contained Low-Profile Freezer Base Equipment Stands** | | | | | | | | | | |
|---|---|---|---|---|---|---|---|---|---|---|
| *Model* | *12x20 Pan Capacity* | *# Of Drawers* | *Voltage/Hertz/ Phase* | *Amps* | *H.P.* | *Nema Plug* | *Shipping Weight* | *BTU Load* | *BTU System* | *Evap BTU/ TD/Temp* |
| F2660 | 4 | (2) 32" | 115/60/1 | 11.0 | 1/2 | 5-15P | 418lbs/190kg | 925 | 1776 | 160/11º/-14º |
| F2694 | 8 | (4) 32" | 115/60/1 | 16.0 | 3/4 | 5-20P | 500lbs/227kg | 1558 | 2713 | 160/17º/-20º |
| **Remote Low-Profile Freezer Base Equipment Stands** | | | | | | | | | | |
| *Model* | *12x20 Pan Capacity* | *# Of Drawers* | *Voltage/Hertz/ Phase* | *Amps* | *H.P.* | *Nema Plug* | *Shipping Weight* | *BTU Load* | *BTU System* | *Evap BTU/ TD/Temp* |
| F2748 | 4 | (2) 32" | 115/60/1 | 10.0 | N/A | N/A | 295lbs/134kg | 1032 | N/A | 160/8º/-11º |
| F2776 | 8 | (4) 32" | 115/60/1 | 10.0 | N/A | N/A | 375lbs/170kg | 1770 | N/A | 160/12º/-15º |
| **Remote Low-Profile Refrigerator Base Equipment Stands** | | | | | | | | | | |
| *Model* | *12x20 Pan Capacity* | *# Of Drawers* | *Voltage/Hertz/ Phase* | *Amps* | *H.P.* | *Nema Plug* | *Shipping Weight* | *BTU Load* | *BTU System* | *Evap BTU/ TD/Temp* |
| F2852 | 4 | (2) 19" (2) 27" | 115/60/1 | 3.0 | N/A | N/A | 278lbs/126kg | 452 | N/A | 120/5º/32º |
| F2856 | 4 | (2) 32" | 115/60/1 | 3.0 | N/A | N/A | 299lbs/136kg | 461 | N/A | 120/5º/32º |
| F2862 | 6 | (2) 19" (2) 27" | 115/60/1 | 3.0 | N/A | N/A | 331lbs/150kg | 575 | N/A | 120/6º/31º |
| F2875 | 8 | (2) 27" (2) 32" | 115/60/1 | 3.0 | N/A | N/A | 401lbs/182kg | 717 | N/A | 240/4º/33º |
| F2880 | 8 | (4) 32" | 115/60/1 | 3.0 | N/A | N/A | 428lbs/194kg | 726 | N/A | 240/4º/33º |
| F2887 | 10 | (2) 19" (4) 27" | 115/60/1 | 6.0 | N/A | N/A | 466lbs/211kg | 868 | N/A | 240/4º/33º |
| F2899 | 12 | (6) 27" | 115/60/1 | 6.0 | N/A | N/A | 530lbs/240kg | 1029 | N/A | 240/5º/32º |
| F28110 | 12 | (6) 32" | 115/60/1 | 6.0 | N/A | N/A | 588lbs/267kg | 1143 | N/A | 240/5º/32º |
| **Self Contained Low-Profile Refrigerator Base Equipment Stands** | | | | | | | | | | |
| *Model* | *12x20 Pan Capacity* | *# Of Drawers* | *Voltage/Hertz/ Phase* | *Amps* | *H.P.* | *Nema Plug* | *Shipping Weight* | *BTU Load* | *BTU System* | *Evap BTU/ TD/Temp* |
| F2952C | 4 | (2) 32" | 115/60/1 | 8.0 | 1/5 | 5-15P | 398lbs/181kg | 452 | 1727 | 120/14º/23º |
| F2956C | 4 | (2) 32" | 115/60/1 | 8.0 | 1/5 | 5-15P | 405lbs/184kg | 461 | 1727 | 120/14º/23º |
| F2962C | 6 | (2) 19" (2) 27" | 115/60/1 | 8.0 | 1/5 | 5-15P | 479lbs/217kg | 575 | 1727 | 120/14º/23º |
| F2975C | 8 | (2) 27" (2) 32" | 115/60/1 | 10.0 | 1/4 | 5-15P | 540lbs/245kg | 717 | 2341 | 144/16º/21º |
| F2980C | 8 | (4) 32" | 115/60/1 | 10.0 | 1/4 | 5-15P | 578lbs/262kg | 726 | 2341 | 144/16º/21º |
| F2987C | 10 | (2) 19" (4) 27" | 115/60/1 | 10.0 | 1/4 | 5-15P | 672lbs/305kg | 868 | 2341 | 144/16º/21º |
| F2999C | 12 | (6) 27" | 115/60/1 | 10.0 | 1/4 | 5-15P | 691lbs/313kg | 1029 | 2341 | 144/16º/21º |
| F29110C | 12 | (6) 32" | 115/60/1 | 12.0 | 1/3 | 5-15P | 766lbs/347kg | 1143 | 2630 | 144/18º/19º |

# F17 Specifications

| Open Shelf Equipment Stands | | | | | | |
|---|---|---|---|---|---|---|
| *Model* | *Length* | *# Of Shelves* | *Shelves Sq. Ft.* | *# Of Drawers* | *# Of 12x20 Pans* | *Shipping Weight* |
| F17OS36 | 36" (91cm) | 1 | 5.95 | N/A | N/A | 200lbs/91kg |
| F17OS48 | 48" (122cm) | 1 | 8.0 | N/A | N/A | 250lbs/113kg |
| F17OS60 | 60" (152cm) | 1 | 10.15 | N/A | N/A | 300lbs/136kg |
| F17OS72 | 72" (183cm) | 1 | 12.25 | N/A | N/A | 350lbs/159kg |
| F17OS84 | 84" (213cm) | 1 | 14.36 | N/A | N/A | 400lbs/181kg |
| F17OS96 | 96" (244cm) | 1 | 16.46 | N/A | N/A | 475lbs/215kg |
| **Dry Drawer Equipment Stands** | | | | | | |
| F17DD32 | 32" (81cm) | N/A | N/A | (1) 32" | 2 | 290lbs/132kg |
| F17DD46 | 46" (117cm) | N/A | N/A | (1) 19" (1) 27" | 3 | 350lbs/159kg |
| F17DD54 | 54" (137cm) | N/A | N/A | (2) 27" | 4 | 390lbs/177kg |
| F17DD64 | 64" (163cm) | N/A | N/A | (2) 32" | 4 | 430lbs/195kg |
| F17DD73 | 73" (185cm) | N/A | N/A | (1) 19" (2) 27" | 5 | 475lbs/215kg |
| F17DD81 | 81" (206cm) | N/A | N/A | (3) 27" | 6 | 520lbs/236kg |
| F17DD96 | 96" (244cm) | N/A | N/A | (3) 32" | 6 | 600lbs/272kg |

| Self-Contained Refrigerated Base Equipment Stands | | | | | | | | | | |
|---|---|---|---|---|---|---|---|---|---|---|
| *Model* | *12x20 Pan Capacity* | *# Of Drawers* | *Voltage/Hertz/ Phase* | *Amps* | *H.P.* | *Nema Plug* | *Shipping Weight* | *BTU Load* | *BTU System* | *Evap BTU/ TD/Temp* |
| F17C52 | 4 | (2) 32" | 115/60/1 | 8.0 | 1/5 | 5-15P | 410lbs/186kg | 452 | 1727 | 120/14º/23º |
| F17C60 | 6 | (2) 19" (2) 27" | 115/60/1 | 8.0 | 1/5 | 5-15P | 460lbs/209kg | 556 | 1727 | 120/14º/23º |
| F17C68 | 8 | (4) 27" | 115/60/1 | 8.0 | 1/5 | 5-15P | 500lbs/227kg | 632 | 1727 | 120/14º/23º |
| F17C78 | 8 | (4) 32" | 115/60/1 | 10.0 | 1/4 | 5-15P | 580lbs/263kg | 726 | 2341 | 120/14º/23º |
| F17C87 | 10 | (2) 19" (4) 27" | 115/60/1 | 10.0 | 1/4 | 5-15P | 625lbs/284kg | 868 | 2341 | 144/16º/21º |
| F17C95 | 12 | (6) 27" | 115/60/1 | 10.0 | 1/4 | 5-15P | 700lbs/318kg | 1001 | 2341 | 144/16º/21º |
| F17C110 | 12 | (6) 32" | 115/60/1 | 12.0 | 1/3 | 5-15P | 750lbs/340kg | 1143 | 2630 | 144/16º/21º |
| **Remote Refrigerated Base Equipment Stands** | | | | | | | | | | |
| F17R44 | 4 | (2) 32" | 115/60/1 | 3.0 | N/A | N/A | 300lbs/136kg | 452 | N/A | 120/4º/33º |
| F17R52 | 6 | (2) 19" (2) 27" | 115/60/1 | 3.0 | N/A | N/A | 350lbs/159kg | 556 | N/A | 120/5º/32º |
| F17R60 | 8 | (4) 27" | 115/60/1 | 3.0 | N/A | N/A | 396lbs/180kg | 632 | N/A | 120/5º/32º |
| F17R70 | 8 | (4) 32" | 115/60/1 | 3.0 | N/A | N/A | 450lbs/204kg | 726 | N/A | 120/6º/31º |
| F17R79 | 10 | (2) 19" (4) 27" | 115/60/1 | 6.0 | N/A | N/A | 525lbs/238kg | 868 | N/A | 240/4º/33º |
| F17R87 | 12 | (6) 27" | 115/60/1 | 6.0 | N/A | N/A | 560lbs/254kg | 1001 | N/A | 240/4º/33º |
| F17R102 | 12 | (6) 32" | 115/60/1 | 6.0 | N/A | N/A | 610lbs/277kg | 1143 | N/A | 240/5º/32º |
| **Self-Contained Freezer Base Equipment Stands** | | | | | | | | | | |
| *Model* | *12x20 Pan Capacity* | *# Of Drawers* | *Voltage/Hertz/ Phase* | *Amps* | *H.P.* | *Nema Plug* | *Shipping Weight* | *BTU Load* | *BTU System* | *Evap BTU/ TD/Temp* |
| F17FC60 | 4 | (2) 32" | 115/60/1 | 12.0 | 1/2 | 5-15P | 450lbs/204kg | 1242 | 1776 | 160/11º/-14º |
| F17FC76 | 6 | (2) 19" (2) 27" | 115/60/1 | 16.0 | 3/4 | 5-20P | 600lbs/272kg | 1461 | 2713 | 160/17º/-20º |
| F17FC84 | 8 | (4) 27" | 115/60/1 | 16.0 | 3/4 | 5-20P | 635lbs/288kg | 1647 | 2713 | 160/17º/-20º |
| F17FC94 | 8 | (4) 32" | 115/60/1 | 16.0 | 3/4 | 5-20P | 710lbs/322kg | 1879 | 2713 | 160/17º/-20º |
| **Remote Freezer Base Equipment Stands** | | | | | | | | | | |
| F17FR48 | 4 | (2) 32" | 115/60/1 | 10.0 | N/A | N/A | 360lbs/163kg | 1242 | N/A | 160/8º/-11º |
| F17FR58 | 6 | (2) 19" (2) 27" | 115/60/1 | 10.0 | N/A | N/A | 400lbs/181kg | 1461 | N/A | 160/9º/-12º |
| F17FR66 | 8 | (4) 27" | 115/60/1 | 10.0 | N/A | N/A | 475lbs/215kg | 1647 | N/A | 160/10º/-13º |
| F17FR76 | 8 | (4) 32" | 115/60/1 | 10.0 | N/A | N/A | 560lbs/254kg | 1879 | N/A | 160/12º/-15º |

# Installation

**Location**
This unit is intended for indoor use only. Be sure the location chosen has a floor strong enough to support the total weight of the cabinet, cooking equipment and contents. Reinforce the floor as necessary to provide for maximum loading, for complete weight chart, please refer to page 7.
Good refrigeration is based on good air circulation inside and out.

**Inside cabinet:** Do not pack refrigerator so full that air cannot circulate.

**Outside cabinet:** Be sure that the unit has access to ample air to and from the unit. If air flow is available to the rear of the unit that will help dissipate exhaust air. In the event the unit is attached to the wall mount brackets, it is important that air flow is available to the compressor compartment. Allow air flow to the bottom of the unit as well, avoid hot corners when possible. Allowing for the proper air flow and ventilation to the compressor compartment will extend the life of the compressor as well as ensure proper operation.




**Cooking Equipment: WARNING! To assure proper operation a 2" airspace must be maintained between the lowest part of any cooking equipment and the top of this unit. Cooking equipment must have a barrier (i.e. bottom, drip pan) between its heat source and the top of the equipment stand. Failure to comply with this could severely damage the equipment stand and void all warranties.**

**Leveling**
A level cabinet looks better and will perform better because the drain pan will drain properly, the doors will line up with the frames properly, and the cabinet will not be subject to undue strain.
A unit on legs will have an adjustable bullet foot on each leg, adjust each for a level unit. A unit on casters will not be adjustable. Be sure the unit is on a level floor, make necessary changes to the floor for proper level.
Lock all front casters to ensure the stability of the unit.

**Wall bracket installation**
A wall bracket kit is supplied to secure the equipment stand to an interior wall. Some models are supplied on optional casters. These units must also have the wall bracket installed during use.




**The wall bracket must be installed properly and the equipment stand firmly secured to it before using this unit! Failure to observe this warning may result in damage to the equipment and/or injury to the operator! Never use the drawers as steps!**

Do not overload the drawers or drop or throw product into the drawer pans.

**To install the wall bracket, follow these instructions:**




1. Place the threaded rod through the front and rear brackets in the compressor section. Thread the rod into the wall bracket, making sure the longer bracket tabs are above the height of the unit.

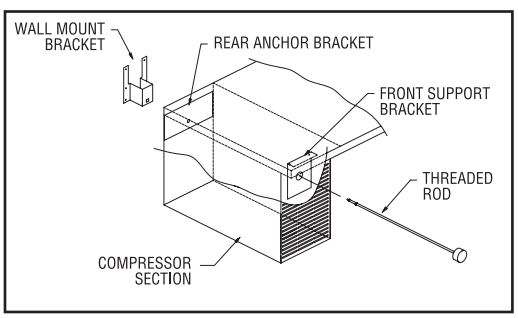


2. Tighten the rod until the bracket is held snug against the back of the unit.
3. Move the unit against the wall at the desired location.
4. Secure the wall mount bracket to the wall using the top two holes provided in the bracket tabs exposed above the unit. The wall material must be capable of supporting a minimum load of 300 pounds (136 kilograms) in the vertical direction. All screws must be 1/4" diameter and be capable of transferring the load from the bracket to the wall.
5. Remove the threaded rod from the wall mount bracket and move the unit away from the wall, leaving the bracket attached to the wall.
6. Secure the bracket to the wall using the remaining four holes.
7. Move the unit back into place and thread the rod back into the wall mount bracket.
8. The unit should now be secured to the wall. Test the mounting by pulling on the unit and checking that all screws are tightened and the unit is firmly in place. If the unit is secured, you may now place other equipment on top of the stand and use the unit as required.




**Never place any equipment on top of this unit without first installing the wall bracket as shown above and ensuring that the equipment is securely anchored and stable.**

9. To remove the unit in order to clean behind it, first remove any equipment placed on top of the stand. Then rotate the knob on the threaded rod counter-clockwise to loosen and remove the rod from the bracket.




**Before removing any cooking equipment (including cooking oils) from the equipment stand, allow time for the equipment to cool thoroughly. Use extreme care in moving cooking equipment.**

**The threaded rod must be reinstalled and tightened before returning the unit to service!**




**Be sure all cooking equipment resting on the equipment stand is properly anchored. Consult the manufacturer's instructions for the cooking equipment to determine the proper mounting technique. It is the owner's and operator's responsibility to securely anchor cooking equipment to the equipment stand.**

**Plumbing**
Self-contained equipment stands come standard with a condensate evaporator. If the condensate evaporator fails, the unit's drain must have an outlet to an appropriate drainage area or container.




**Moisture collecting from improper drainage can create a slippery surface on the floor and a hazard to employees. It is the owner's and operator's responsibility to provide a container or outlet for drainage.**

# Installation — Continued

## Electrical connection

Refer to the amperage data on page 3 & 4, the serial tag, your local code or the National Electrical Code to be sure the unit is connected to the proper power source. A protected circuit of the correct voltage and amperage must be run for connection of the line cord, or permanent connection to the unit.




**The on/off switch must be turned to OFF and the unit disconnected from the power source whenever performing service, maintenance functions or cleaning the refrigerated area.**

**Under no circumstances is a self-contained unit to be operated without the louvered panel in place.**

# Operation: Refrigerated Base Equipment Stands

Drawer base equipment stands are designed and pre-set at the factory to maintain a temperature of 36°F to 40°F (2°C to 4°C). A solar-powered digital thermometer is located on the front of the unit to allow monitoring of the drawer housing temperature.

The drawer housing temperature is controlled by a thermostat located in the machine compartment. Continuous opening and closing of the drawers will hamper the unit's ability to maintain optimum refrigeration temperature. Excess weight on top of the unit will adversely affect the operation of the drawers.

The cooling coil is coated in epoxy to provide long-lasting service. However, storing all acidic items, such as peppers and tomatoes with lids that are sealable and immediately wiping up all spills of either acid or base items will greatly extend the life of your unit.




**Never stand on the unit or its drawers! They are not designed to hold the weight of an adult, and may collapse or unit may tip if misused in this manner.**

### Refrigerator Evaporator Fan Operation

When the refrigerator is initially powered up or immediately following a power outage the unit will begin cooling after a 3-6 minute delay. During normal operation the evaporator fan pulses independently of the compressor as dictated by the controller as follows:

1. During the cooling mode, compressor and evaporator fan run simultaneously.
2. During the compressor off mode, evaporator fan pulses three minutes on and three minutes off.
3. During an actual defrost event other than the off-cycle defrost, compressor stays off but the evaporator fan runs continuously.

| Cooling Cycle | | | | Defrost Cycle | |
|---|---|---|---|---|---|
| Compressor On | | Compressor Off | | Compressor Off | |
| Evap Fan On | Evap Fan Off | Evap Fan On | Evap Fan Off | Evap Fan On | Evap Fan Off |
| X | | Cycles On 3-Min, Off 3-Min | | X | |

# Operation: Freezer Base Equipment Stands

Freezer base equipment stands are designed and pre-set at the factory to maintain a temperature of 0°F to -5°F (-18°C to -21°C) interior cabinet temperature at 100°F (38°C) ambient room temperature. Self-contained units have a digital thermometer installed in the removable louver. The digital thermometer for remote units is located in the removable access panel.

### Freezer Evaporator Fan Operation

The evaporator fan(s) and condenser fan will cycle off and on with the compressor to conserve energy. The temperature control will cycle the compressor and condenser fan motor and evaporator fan motor to maintain box temperature at the control setting.

| Cooling Cycle | | | | Defrost Cycle | |
|---|---|---|---|---|---|
| Compressor On | | Compressor Off | | Compressor Off | |
| Evap Fan On | Evap Fan Off | Evap Fan On | Evap Fan Off | Evap Fan On | Evap Fan Off |
| X | | | X | | X |

### Freezer Defrost

Self-contained models use hot gas to defrost the evaporator coils. Remote freezers use electric defrost.

## **Temperature Control Settings,** Self Contained Refrigerators And Freezers

A thermostat controls temperature in self contained refrigerators and freezers. Thermostats are located in the machine compartment. They are field adjustable and do not require a service agent. The factory setting for refrigerators is 2.5. The factory setting for freezers is 4.5. Set toward 1 for higher temperatures and toward 7 for lower temperatures.




**Please make small incremental adjustments if a temperature adjustment is necessary. Contact the service department at Delfield +1 (989) 773-7981 or your local service agent for additional assistance. Delfield is not responsible for charges incurred while adjusting the thermostat.**

## **Temperature Control Settings,** Remote Freezers

The temperature control is located in the machine compartment. It is field adjustable and does not require a service agent. The factory setting for a remote freezer is 0°F cut-in with a 5°F differential.




**Please make small incremental adjustments if a temperature adjustment is necessary. Contact the service department at Delfield +1 (989) 773-7981 or your local service agent for additional assistance. Delfield is not responsible for charges incurred while adjusting the thermostat.**

## Maximum Cooking Equipment Weight Capacity

| Model | Total Weight | Unit Weight | Total Drawer Capacity | Max Cooking Equipment Weight |
|---|---|---|---|---|
| F2952C | 1000lbs/ 454kg | 398lbs/ 181kg | 150lbs/ 68kg | 452lbs/ 205kg |
| F2956C | 1000lbs/ 454kg | 405lbs/ 184kg | 150lbs/ 68kg | 445lbs/ 202kg |
| F2962C | 1500lbs/ 680kg | 479lbs/ 217kg | 300lbs/ 136kg | 721lbs/ 327kg |
| F2975C | 1500lbs/ 680kg | 540lbs/ 245kg | 300lbs/ 136kg | 660lbs/ 299kg |
| F2980C | 1500lbs/ 680kg | 578lbs/ 262kg | 300lbs/ 136kg | 622lbs/ 282kg |
| F2987C | 1500lbs/ 680kg | 672lbs/ 305kg | 450lbs/ 204kg | 378lbs/ 171kg |
| F2999C | 1500lbs/ 680kg | 691lbs/ 313kg | 450lbs/ 204kg | 359lbs/ 163kg |
| F29110C | 1800lbs/ 816kg | 766lbs/ 347kg | 450lbs/ 204kg | 584lbs/ 265kg |
| F2660C | 1500lbs/ 680kg | 418lbs/ 190kg | 150lbs/ 68kg | 932lbs/ 423kg |
| F2694C | 1500lbs/ 680kg | 500lbs/ 227kg | 300lbs/ 136kg | 700lbs/ 318kg |

# Maintenance

**Door Gasket Maintenance**

Door gaskets require regular cleaning to prevent mold and mildew build up and also to retain the elasticity of the gasket. Gasket cleaning can be done with the use of warm soapy water. Avoid full strength cleaning products on gaskets as this can cause them to become brittle and crack. Never use sharp tools or knives to scrape or clean the gasket. Gaskets can be easily replaced and do not require the use of tools or an authorized service person. The gaskets are "Dart" style and can be pulled out of the groove in the door and new gaskets can be "pressed" back into place.

**Drain Maintenance - Base**

Each unit has a drain located inside the unit that removes the condensation from the evaporator coil and routes it to an external condensate evaporator pan. Each drain can become loose or disconnected during normal use. If you notice water accumulation on the inside of the unit be sure the drain tube is connected to the evaporator drain pan. If water is collecting underneath the unit make sure the end of the drain tube is in the condensate evaporator in the machine compartment. The leveling of the unit is important as the units are designed to drain properly when level. Be sure all drain lines are free of obstructions.

**Drawer Maintenance**

**Drawer Assembly Cleaning**

The drawer assembly is designed to be cleaned easily. Both drawer and tracks are removable without tools. The drawer tracks are dishwasher safe or can be cleaned in a sink with detergents and a soft bristle brush. Drawers and tracks should be cleaned on a weekly basis.

**Remove Drawers**

Pull the drawer box out until it stops. Lift up on the drawer front and pull the drawer box completely out. Using a soft bristle brush, clean the track on the bottom of the drawer box. When finished, it should be wiped clean of all food and debris.

**Tracks**

The drawer box assembly must be removed. Pull the drawer tracks out until they hit a stop. Locate blue safety clips towards the back of each drawer track. Blue safety clips have a tab on the top. Push the tab back until it clicks. Lift up and pull the drawer tracks all the way out of the drawer cage. The drawer tracks are dishwasher safe or can be cleaned in a sink with detergents and a soft bristle brush. Drawers and tracks should be cleaned on a weekly basis.

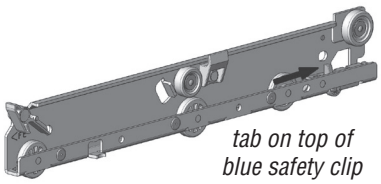

*tab on top of blue safety clip*

Using a soft bristle brush, wash the track making sure each roller is thoroughly cleaned. The drawer cage should be cleaned with a soft bristle brush, removing any food and debris gathered on the bottom ledge. Once it's cleaned thoroughly with a soft bristle brush, wipe remaining debris clean with a soft towel.

**Reassembly**

Push the drawer tracks into the drawer cage. The blue safety clip must remain pushed towards the back. Lift up and slide the drawer track all the way into the drawer cage. The blue safety clip will lock in place automatically. Once all tracks are replaced, insert the drawer box. Rest the drawer box bottom track on the front track roller. Then push the drawer back in place SLOWLY. When the drawer box is about half way in you will hit a STOP. You must lift the front of the drawer up approximately ½" (1.3cm) to continue inward. Clean tracks as often as possible. The cleaner the tracks are the better they will operate.

**Caster Maintenance**

Wipe casters with a damp cloth monthly to prevent corrosion.




**The power switch must be turned to OFF and the unit disconnected from the power source whenever performing service, maintenance functions or cleaning the refrigerated area.**

**Refrigerators and Freezers**

The interior and exterior can be cleaned using soap and warm water. If this isn't sufficient, try ammonia and water or a nonabrasive liquid cleaner. When cleaning the exterior, always rub with the "grain" of the stainless steel to avoid marring the finish. Do not use an abrasive cleaner because it will scratch the stainless steel and can damage the breaker strips and gaskets.

**Stainless Steel Care and Cleaning**

To prevent discoloration or rust on stainless steel several important steps need to be taken. First, we need to understand the properties of stainless steel. Stainless steel contains 70- 80% iron, which will rust. It also contains 12-30% chromium, which forms an invisible passive film over the steel's surface, which acts as a shield against corrosion. As long as the protective layer is intact, the metal is still stainless. If the film is broken or contaminated, outside elements can begin to breakdown the steel and begin to form discoloration or rust. Proper cleaning of stainless steel requires soft cloths or plastic scouring pads.

**NEVER USE STEEL PADS, WIRE BRUSHES OR SCRAPERS!**

Cleaning solutions need to be alkaline based or non-chloride cleaners. Any cleaner containing chlorides will damage the protective film of the stainless steel. Chlorides are also commonly found in hard water, salts, and household and industrial cleaners. If cleaners containing chlorides are used be sure to rinse repeatedly and dry thoroughly. Routine cleaning of stainless steel can be done with soap and water. Extreme stains or grease should be cleaned with a non-abrasive cleaner and plastic scrub pad. Always rub with the grain of the steel. There are stainless steel cleaners available which can restore and preserve the finish of the steels protective layer. Early signs of stainless steel breakdown are small pits and cracks. If this has begun, clean thoroughly and start to apply stainless steel cleaners in attempt to restore the passivity of the steel.

## **Maintenance,** continued




**Never use an acid based cleaning solution! Many food products have an acidic content, which can deteriorate the finish. Be sure to clean the stainless steel surfaces of ALL food products. Common items include, tomatoes, peppers and other vegetables.**

**Cleaning the Condenser Coil**

In order to maintain proper refrigeration performance, the condenser fins must be cleaned of dust, dirt and grease regularly. It is recommended that this be done at least every three months. If conditions are such that the condenser is totally blocked in three months, the frequency of cleaning should be increased. Clean the condenser with a vacuum cleaner or stiff brush. If extremely dirty, a commercially available condenser cleaner may be required.

Failure to maintain a clean condenser coil can initially cause high temperatures and excessive run times. Continuous operation with a dirty or clogged condenser coil can result in compressor failure. Neglecting the condenser coil cleaning procedures will void any warranties associated with the compressor and cost to replace the compressor.




**Never use a high-pressure water wash for this cleaning procedure as water can damage the electrical components located near or at the condenser coil.**

**Preventing blower coil corrosion**

To help prevent corrosion of the blower coil, store all acidic items, such as pickles and tomatoes, in sealable containers. Immediately wipe up all spills.




**Units with pans should be operated with pans in place. Operating the unit without all pans in place will lower efficiency and may damage the unit.**

**Cleaning the condensate evaporator (remote models only)**

The stainless steel condensate evaporator pan should be cleaned every six months. Use a vacuum cleaner or damp cloth to remove dust that may have accumulated. This will prevent corrosion of the stainless steel.

Over shelves and other items mounted to the top of the counters should never be installed in the field due to the potential damage to the refrigeration system.

## Wiring Diagram: F2900 & F17 Series Self Contained Refrigerators 115V/60HZ/1PH

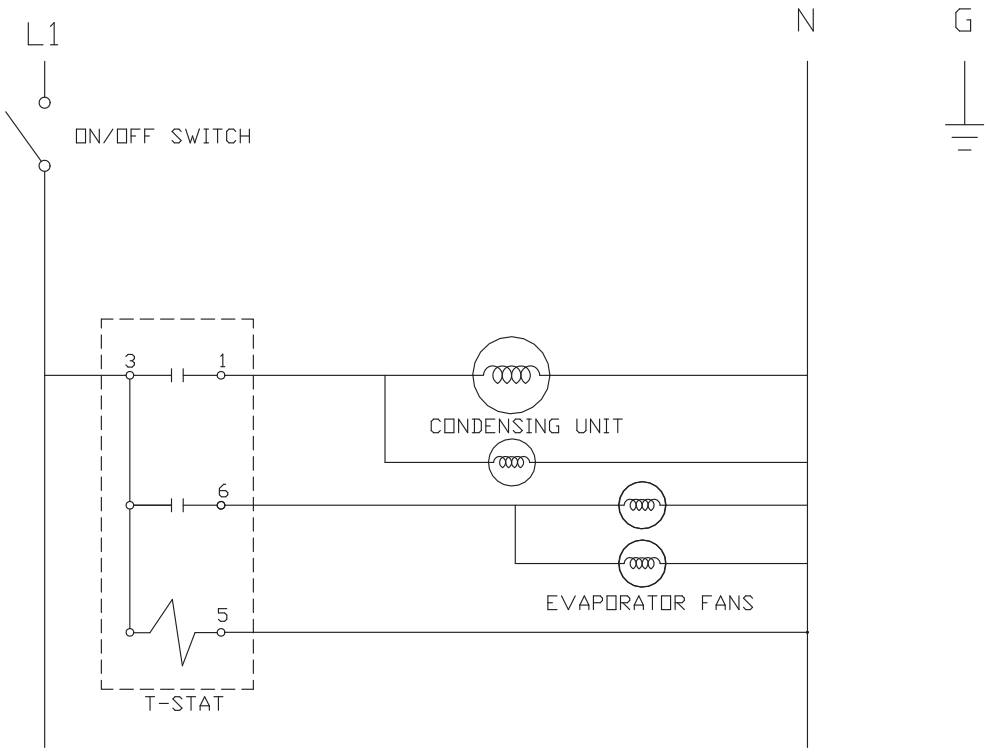


## Wiring Diagram: F2800 & F17 Series Remote Refrigerators 115V/60HZ/1PH

**Note:** Wiring for F2800 series includes junction box with 6" leads for field connection and wiring to evaporator fans and coils only.

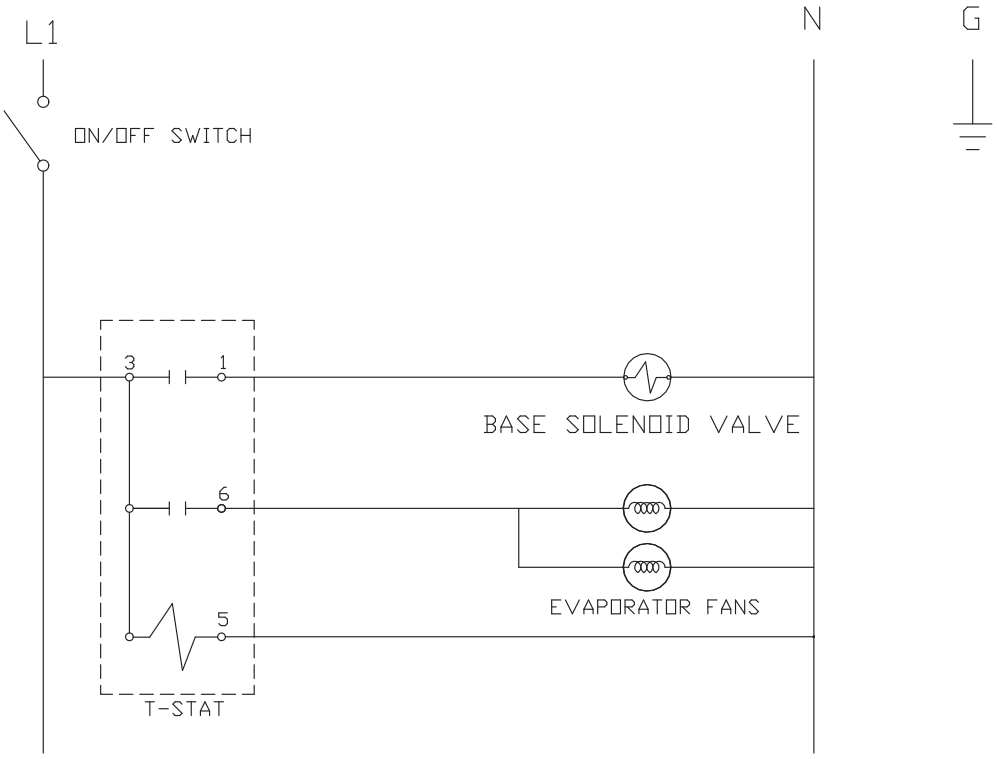

## Wiring Diagram: F2600 & F17 Series Self Contained Freezers

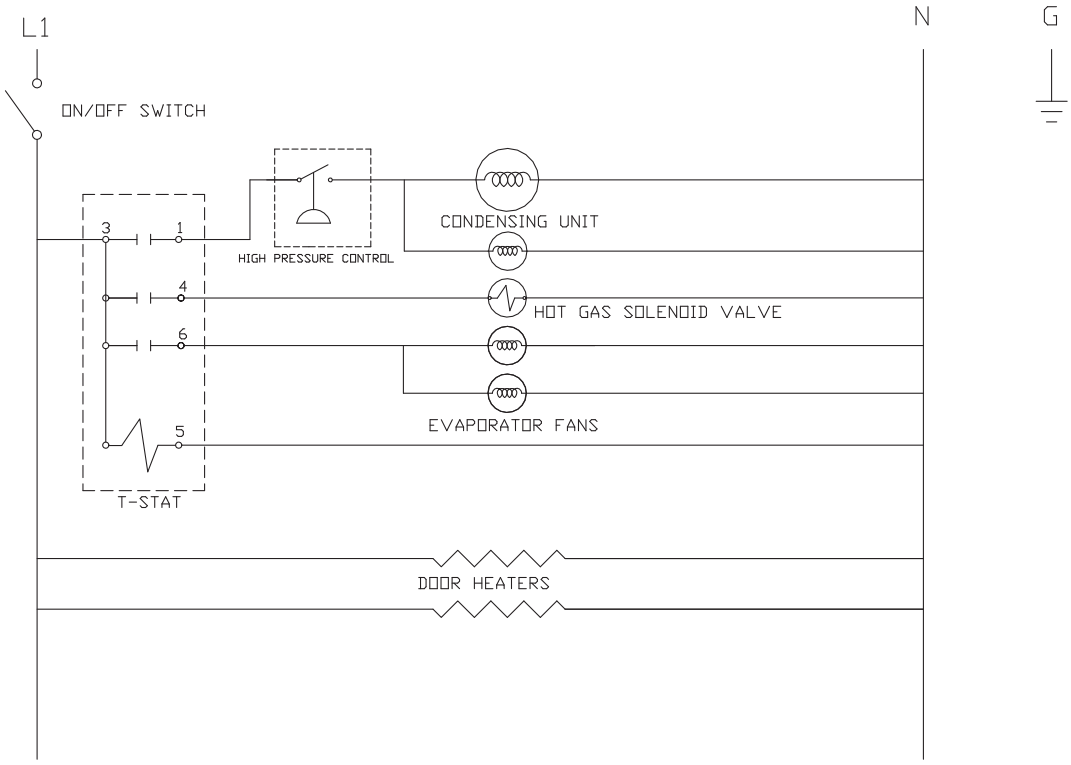


## Wiring Diagram: F2700 & F17 Series Remote Freezers

**Note:** Wiring for F2700 series includes junction box with 6' leads for field connection and wiring to evaporator fans and coils only.

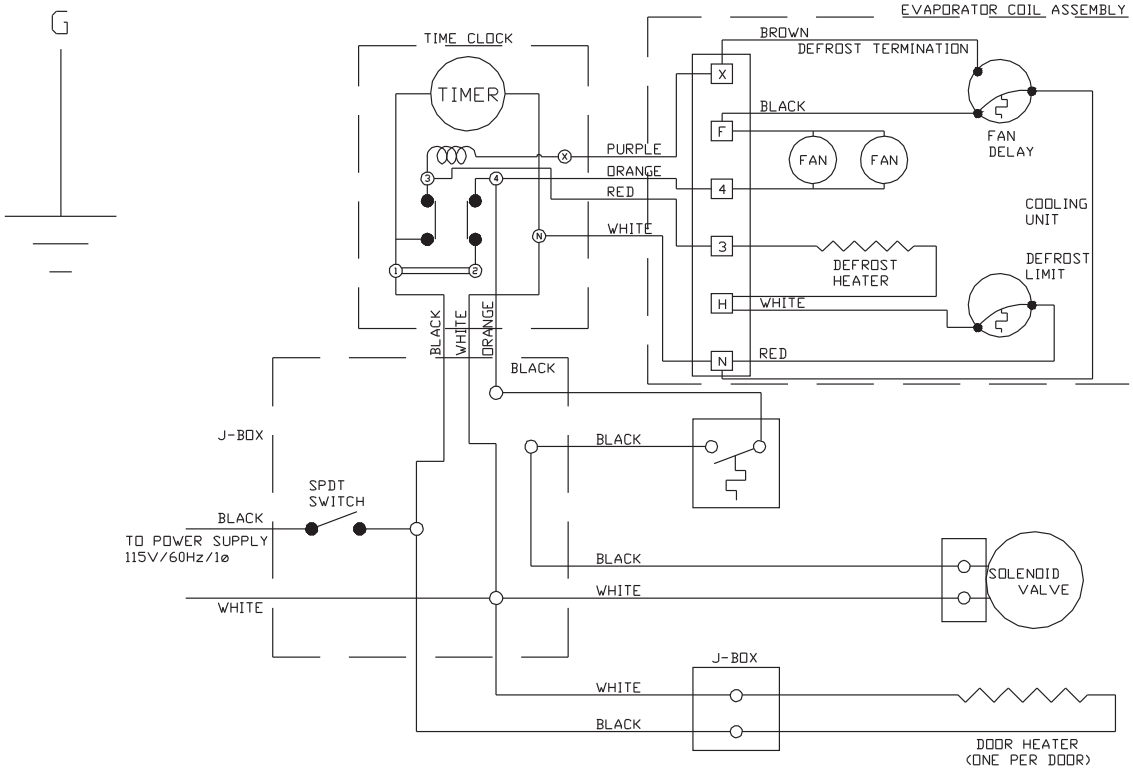




For customer service, call (800) 733-8829, (800) 733-8821, Fax (989) 773-3210, www.delfield.com

# Replacement Parts - Listed by Model

**F2600**

| *Part#* | *Description* | *F2660* | *F2694* |
|---|---|---|---|
| *000-BN5-0054 | Assembly, 1/2 HP Cond, Low, HG | X | |
| *000-BN5-0055 | Assembly, 3/4 HP Cond, Low, HG | | X |
| *000-AEW-007K | Assembly, Drawer Sys, FRZ | X | X |
| *000-AMF-0033 | Assembly, wall anchor, 18" louver | X | |
| *000-AMF-0034 | Assembly, wall anchor, 24" louver | | X |
| *000-249-0004 | Coil Assembly, Frz Evap, R404A | X | X |
| *000-298-003W | Control Assembly, 5-20 | | X |
| *000-298-003V | Control Assembly, 5-15 | X | |
| 3234645 | Leg, 6, S/S, Removable Foot | X | X |
| 359-478-003J | Panel, LVR Lo-Profile | X | |
| 359-478-003K | Panel, LVR Lo-Profile | | X |
| 2190154 | Switch, SPST, 15 Amp | X | |
| 2194241 | Switch, SPST, 20 Amp, Brown | | X |
| 3516135 | Thermometer, Hanging, 4” | X | X |
| 2194791 | Thermometer Cable, Danfoss | X | X |
| 2194792 | Thermometer Display, Digital, Danfoss | X | X |

**F2700**

| *Part#* | *Description* | *F2748* | *F2776* |
|---|---|---|---|
| *000-AMR-0030 | Assembly, Condensate Evap Pan | X | X |
| *000-AEW-007K | Assembly, Drawer Sys, FRZ | X | X |
| *000-AMF-0030 | Assembly, wall anchor, lo pro | X | X |
| 3516053 | Coil, Solenoid, 120V/50Amp | X | X |
| *000-249-0006 | Coil Assembly, Frz Evap, Remote | X | X |
| 3516056 | Control, Temperature | X | X |
| 3234645 | Leg, 6, S/S, Removable Foot | X | X |
| 3516135 | Thermometer, Hanging | X | X |
| 2194791 | Thermometer Cable, Danfoss | X | X |
| 2194792 | Thermometer Display, Digital, Danfoss | X | X |
| 2194151 | Timer, Paragon, #8145-00 | X | X |
| 3516102 | Valve, Solenoid, 1/4ODF | X | X |

**F2800 - All Models**

| *Part#* | *Description* |
|---|---|
| *000-AMR-0030 | Assembly, Condensate Evap Pan |
| 243-209-0031 | Clip, Coil Air Baffle, Left |
| 243-209-0032 | Clip, Coil Air Baffle, Right |
| 3234645 | Leg, 6, S/S, Removable Foot |
| 3516135 | Thermometer, Hanging, 4” |
| 2194791 | Thermometer Cable, Danfoss |
| 2194792 | Thermometer Display, Digital, Danfoss |
| 000-282-006T | Thermostat Assembly, Danfoss |

* Assembly and part prints on pages 17-21.

# **Replacement Parts -** Listed by Model

| *Part#* | *Description* | *F2852* | *F2856* | *F2862* | *F2875* | *F2880* | *F2887* | *F2899* | *F28110* |
|---|---|---|---|---|---|---|---|---|---|
| *000-AMF-0031 | Assembly, wall anchor, 14" louver | | | | | | X | | X |
| *000-AMF-0032 | Assembly, wall anchor, 16" louver | | | X | X | X | | | |
| *000-AMF-0033 | Assembly, wall anchor, 18" louver | | X | | | | | X | |
| *000-AMF-0030 | Assembly, wall anchor, lo pro | X | | | | | | | |
| *000-248-0030 | Coil Assembly, R404A, Ref | X | | X | X | X | X | X | X |
| *000-248-0037 | Coil Assembly, R404A, Ref, Fan Lt | | X | | | | | | |
| *000-AEW-007F | Drawer system, 19", lo-profile | X | | X | | | X | X | |
| *000-AEW-007D | Drawer system, 27", lo-profile | X | | X | X | | X | | |
| *000-AEW-007C | Drawer system, 32", lo-profile | | X | | X | X | | | X |

**F2900 - All Models**

| *Part#* | *Description* |
|---|---|
| 3234160 | Caster, 5, Plate, Swivel |
| 3234161 | Caster, 5, Plate, Swivel, Break |
| *000-298-003P | Control Assembly, Refg, 5-15P |
| 3516135 | Thermometer, Hanging |
| 2194791 | Thermometer Cable, Danfoss |
| 2194792 | Thermometer Display, Digital, Danfoss |

| *Part#* | *Description* | *F2952C* | *F2956C* | *F2962C* | *F2975C* | *F2980C* | *F2987C* | *F2999C* | *F29110C* |
|---|---|---|---|---|---|---|---|---|---|
| 030-209-0030 | Angle, Coil, Top Baffle | X | X | | | | | | |
| *000-BN5-0037 | Assembly, 1/3 HP Condensing Unit | | | | | | | | X |
| *000-BN5-0030 | Assembly, 1/4 HP Condensing Unit | | | | X | X | X | X | |
| *000-BN5-0031 | Assembly, 1/5 HP Condensing Unit | X | X | X | | | | | |
| *000-AMF-0031 | Assembly, wall anchor, 14" louver | X | | | | | X | | X |
| *000-AMF-0032 | Assembly, wall anchor, 16" louver | | | X | X | X | | | |
| *000-AMF-0033 | Assembly, wall anchor, 18" louver | | X | | | | | X | |
| 243-209-0031 | Clip, Coil Air Baffle, Left | X | X | X | X | X | X | X | X |
| 243-209-0032 | Clip, Coil Air Baffle, Right | | | X | X | X | X | X | X |
| *000-248-0037 | Coil Assembly, R404A, Ref, Fan Lt | X | X | | | | | | |
| *000-248-0030 | Coil Assembly, R404A, Ref | | | X | X | X | X | X | X |
| *000-AEW-007F | Drawer System, 19", lo-profile | | | X | | | X | | |
| *000-AEW-007D | Drawer system, 27", lo-profile | | | X | | | X | X | |
| *000-AEW-007C | Drawer system, 32", lo-profile | X | X | | X | X | | | X |
| *359-478-003I | Louver Panel, 14" | X | | | | | X | | X |
| *359-478-003L | Louver Panel, 16" | | | X | X | X | | | |
| *359-478-003J | Louver Panel, 18" | | X | X | | | | X | |

**F17OS**

| *Part #* | *Description* |
|---|---|
| *000-405-0031 | Bracket, cutting board, left hand |
| *000-405-0035 | Bracket, cutting board, right hand |
| 3234645 | Leg, 6, S/S, Removable Foot |

**F17DD - All Models**

| *Part #* | *Description* |
|---|---|
| *000-405-0031 | Bracket, cutting board, left hand |
| *000-405-0035 | Bracket, cutting board, right hand |

* Assembly and part prints on pages 17-21.

# Replacement Parts - Listed by Model

**F17C - All Models**

| *Part #* | *Description* |
|---|---|
| *000-AMF-0031 | Assembly, 14 RT Wall Anchor |
| *000-405-0031 | Bracket, cutting board, left hand |
| *000-405-0035 | Bracket, cutting board, right hand |
| *000-298-003P | Control Assembly, Refg, 5-15P |
| 3234645 | Leg, 6, S/S, Removable Foot |
| 2194099 | Switch, SPST, 15 Amp |
| 2194791 | Thermometer Cable, Danfoss |
| 2194792 | Thermometer Display, Digital, Danfoss |

| *Part #* | *Description* | *F17C52* | *F17C60* | *F17C68* | *F17C78* | *F17C87* | *F17C95* | *F17C110* |
|---|---|---|---|---|---|---|---|---|
| 030-209-0030 | Angle, Coil, Top Baffle | X | | | | | | |
| *000-BN5-0037 | Assembly, 1/3 HP Condensing Unit | | | | | | | X |
| *000-BN5-0030 | Assembly, 1/4 HP Condensing Unit | | | | X | X | X | |
| *000-BN5-0031 | Assembly, 1/5 HP Condensing Unit | X | X | X | | | | |
| *000-AEW-0066 | Assembly, drawer, 19" lo profile | | X | | | X | | |
| *000-AEW-0064 | Assembly, drawer, 27" lo profile | | X | X | | X | X | |
| *000-AEW-0063 | Assembly, drawer, 32" lo profile | X | | | X | | | X |
| 243-209-0031 | Clip, Coil Air Baffle, Left | X | X | X | X | X | X | X |
| 243-209-0032 | Clip, Coil Air Baffle, Right | | X | X | X | X | X | X |
| *000-248-0037 | Coil Assembly, R404A, Ref, Fan Lt | X | | | | | | |
| *000-248-0030 | Coil Assembly, R404A, Ref | | X | X | X | X | X | X |

**F17R - All Models**

| *Part #* | *Description* |
|---|---|
| *000-AMR-0030 | Assy., Condensate Evap Pan |
| *000-405-0031 | Bracket, cutting board, left hand |
| *000-405-0035 | Bracket, cutting board, right hand |
| 3234645 | Leg, 6, S/S, Removable Foot |
| 000-282-006T | Thermostat Assembly, Danfoss |
| 2194791 | Thermometer Cable, Danfoss |
| 2194792 | Thermometer Display, Digital, Danfoss |

| *Part #* | *Description* | *F17R44* | *F17R52* | *F17R60* | *F17R70* | *F17R79* | *F17R87* | *F17R102* |
|---|---|---|---|---|---|---|---|---|
| 030-209-0030 | Angle, Coil, Top Baffle | X | | | | | | |
| *000-AEW-0033 | Assembly, drawer, 19" lo profile | | X | | | X | | |
| *000-AEW-0031 | Assembly, drawer 27" lo profile | | X | X | | X | X | |
| *000-AEW-0063 | Assembly, drawer, 32" lo profile | X | | | X | | | X |
| 243-209-0031 | Clip, Coil Air Baffle, Left | X | X | X | X | X | X | |
| 243-209-0032 | Clip, Coil Air Baffle, Right | | X | X | X | X | X | |
| *000-248-0037 | Coil Assembly, R404A, Ref, Fan Lt | X | | | | | | |
| *000-248-0030 | Coil Assembly, R404A, Ref | | X | X | X | X | X | X |

* Assembly and part prints on pages 17-21.

# Replacement Parts - Listed by Model

**F17FC - All Models**

| *Part #* | *Description* |
|---|---|
| *000-405-0031 | Bracket, cutting board, left hand |
| *000-405-0035 | Bracket, cutting board, right hand |
| *000-249-0004 | Coil Assembly, Frz Evap, R404A |
| 3234645 | Leg, 6, S/S, Removable Foot |
| 3516135 | Thermometer, Hanging, 4” |
| 2194791 | Thermometer Cable, Danfoss |
| 2194792 | Thermometer Display, Digital, Danfoss |

| *Part #* | *Description* | *F17FC60* | *F17FC76* | *F17FC84* | *F17FC94* |
|---|---|---|---|---|---|
| *000-BN5-0054 | Assembly, 1/2HP Condenser, Low | X | | | |
| *000-BN5-0055 | Assembly, 3/4 HP Condenser, Low | | X | X | X |
| *000-AEW-006J | Assembly, drawer, 19” freezer, lo-profile | | X | | |
| *000-AEW-006M | Assembly, drawer, 27” freezer, lo-profile | | X | X | |
| *000-AEW-006G | Assembly, drawer, 32” freezer, lo-profile | X | | | X |
| *000-298-003W | Control Assembly, 5-20 | | X | X | X |
| *000-298-003V | Control Assembly, 5-15 | X | | | |
| 356-478-0031 | Panel, louver, 18” | X | | | |
| 356-478-0032 | Panel, louver, 24” | | X | X | X |
| 2190154 | Switch, SPST, 15 Amp, 120V | X | X | X | X |
| 2194241 | Switch, SPST, 20 Amp, Brown | | X | X | X |

**F17FR - All Models**

| *Part #* | *Description* |
|---|---|
| *000-AMR-0030 | Assembly, Condensate Evap Pan |
| *000-405-0031 | Bracket, cutting board, left hand |
| *000-405-0035 | Bracket, cutting board, right hand |
| *000-249-0006 | Coil Assembly, Frz Evap, Remote |
| 3516056 | Control, Temperature |
| 3234645 | Leg, 6, S/S, Removable Foot |
| 2194791 | Thermometer Cable, Danfoss |
| 2194792 | Thermometer Display, Digital, Danfoss |
| 2194151 | Timer, Paragon, #8145-00 |

| *Part #* | *Description* | *F17FR48* | *F17FR58* | *F17FR66* | *F17FR76* |
|---|---|---|---|---|---|
| *000-AEW-003D | Assembly, drawer, 19” freezer, lo-profile | | X | | |
| *000-AEW-003B | Assembly, drawer, 27” freezer, lo-profile | | X | X | |
| *000-AEW-003A | Assembly, drawer, 32” freezer, lo-profile | X | | | X |

* Assembly and part prints on pages 17-21.

# Replacement Parts - Condensing Unit Asemblies

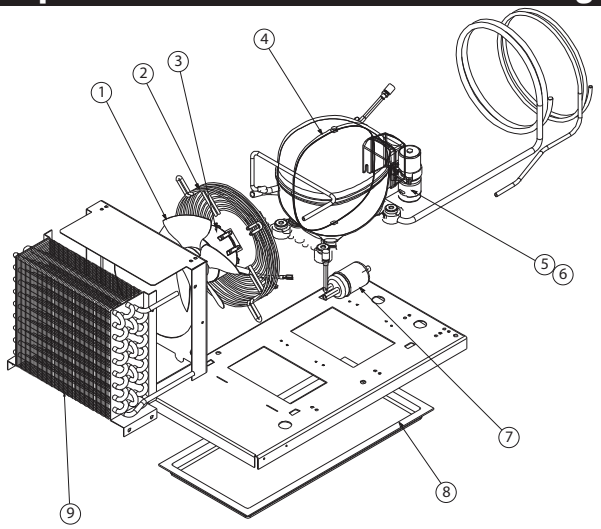


| Key | Part Number | Description |
|---|---|---|
| - | **000-BN5-0030** | **Assembly, 1/4 HP Condensing Unit** |
| 1 | 3516457 | Blade, Fan, 7.25 DIA., 30Deg |
| 2 | 2160020 | Guard, Fan, 7.25 |
| 3 | 2162717 | Motor, Fan, 9W, 115V, CW |
| 4 | 3526999 | Compressor, NF5.5CLX, 115V, 60HZ |
| 5 | 2194787 | Capacitor, Start, 280MFD |
| 6 | 3516444 | Compressor, Relay, Overload, NF5.5CLX |
| 7 | 3516322 | Drier, Filter, (2)Inlet |
| 8 | 039-231-0030 | Pan, Condensate, SM |
| 9 | 3516454 | Coil, Condenser, 1/5, 1/4,1/3HP |

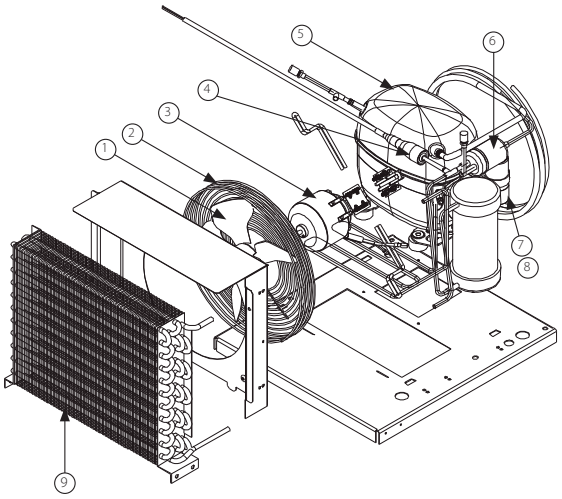


| Key | Part Number | Description |
|---|---|---|
| - | **000-BN5-0054** | **Assembly, 1/2HP Cond, Low, Hot gas** |
| 1 | 3516554 | Blade, Fan, 9.00” |
| 2 | 2160019 | Guard, Fan, Wire |
| 3 | 2162716 | Motor, Fan, 16W, 115V, CW |
| 4 | 3516324 | Cutout, High Pressure |
| 5 | 3527001 | Compressor, SC12CLX.2,115/60HZ |
| 6 | 3516322 | Drier, Filter, (2)Inlet |
| 7 | 2194789 | Capacitor, Start, 240MFD |
| 8 | 3516441 | Relay, Comp, SC12CLX.2 |
| 9 | 3516455 | Coil, Condenser, 1/2 HP |
| - | 024-034-0031 | Pan, Comp, 18.00 |

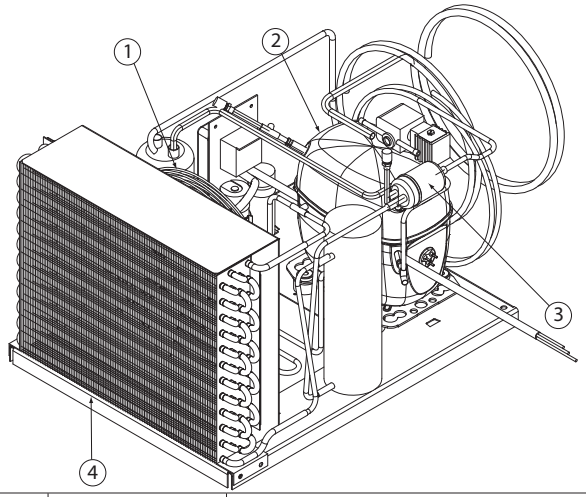


| Key | Part Number | Description |
|---|---|---|
| - | **000-BN5-0055** | **Assembly, 3/4 HP Cond, Low, Hot gas** |
| 1 | 2160019 | Guard, fan condenser |
| | 2162716 | Motor, condenser fan 16W, 155V |
| | 3516433 | Blade, fan 10” CW |
| 2 | 3527002 | Compressor, SC18CLS.2, 115V60hz |
| | 3516442 | Capacitor, start, run assembly |
| 3 | 3516322 | Filter drier |
| 4 | 3516456 | Coil, condenser, 3/4hp |

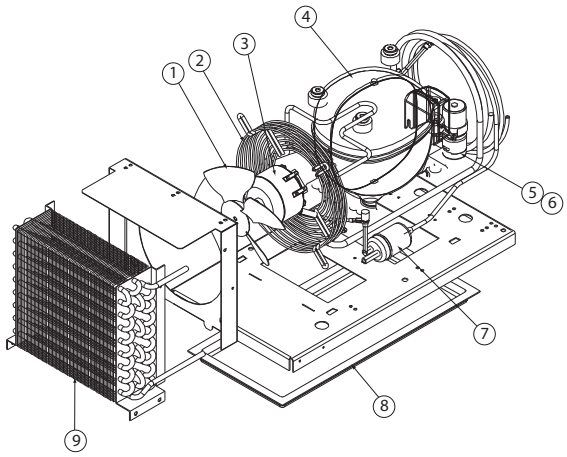


| Key | Part Number | Description |
|---|---|---|
| | **000-BN5-0031** | **Assembly, 1/5 Condensing Unit** |
| 1 | 3516457 | Blade, Fan, 7.25 DIA.,30 Deg |
| 2 | 2160020 | Guard, Fan, 7.25 |
| 3 | 2162717 | Motor, Fan, 9W, 115V, CW |
| 4 | 3526997 | Compressor, 1/5HP, 115/60, R404A |
| 5 | 2194787 | Capacitor, Start, 280MFD |
| 6 | 3516446 | Compressor, Relay, Danfoss |
| 7 | 3516322 | Drier, Filter, (2)Inlet |
| 8 | 039-231-0030 | Pan, Condensate, SM |
| 9 | 3516454 | Coil, Condenser, 1/5, 1/4, 1/3HP |

# Replacement Parts - Condensing Unit Assemblies

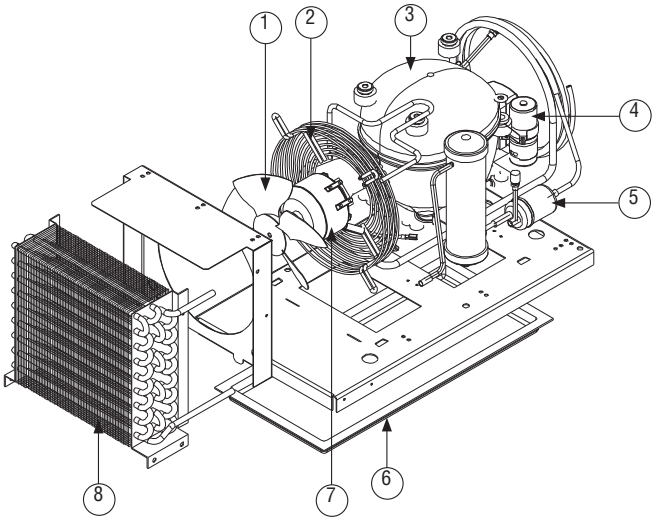


| *Key* | *Part Number* | *Description* |
|---|---|---|
| **-** | **000-BN5-0037** | **Assembly, 1/3 Condensing Unit** |
| 1 | 3516457 | Fan Blade |
| 2 | 2160020 | Fan Guard |
| 3 | 3527000 | Compress, Danfoss, NF7CLS |
| 4 | 2194788 | Start Capacitor |
| 5 | 3516322 | Filter Drier |
| 6 | 075-231-0030 | Pan, Condensate |
| 7 | 2162717 | Fan Motor |
| 8 | 3516454 | Condenser Coil |
| - | 3516438 | Relay, overload, compressor |

# Replacement Parts - Evaporator Coil Assemblies

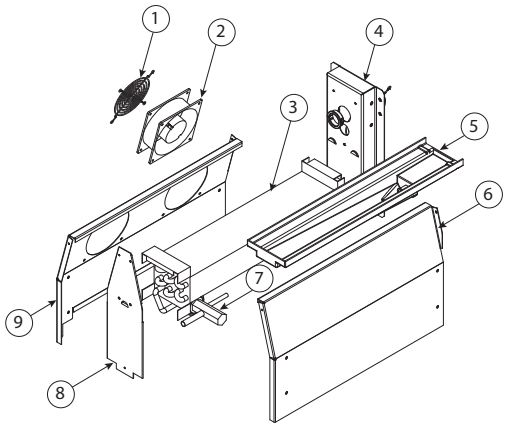


| Key | Part Number | Description |
|---|---|---|
| - | **000-248-0037** | **Coil Assembly, R404A, Ref, Fan Lt** |
| 1 | 2160024 | Guard, fan, 4.7" |
| 2 | 2160023 | Fan, axiel, 120V |
| 3 | 3516095 | Coil, evaporator |
| 4 | 030-232-0003 | Back, evaporator, enclosure |
| 5 | 000-BNH-0030 | Drip pan, evaporator |
| 6 | 030-233-0038 | Side, coil, angled, Rt, Blank |
| 7 | 3516273 | Expansion valve, 1/4, R-404a |
| 8 | 030-234-0003 | Front, coil |
| 9 | 030-233-0039 | Side, Coil, Angled, Lt, 2Fan |
| - | 2184317 | Harness, coil |
| - | 2194808 | Probe, Defrost, Danfoss, Control |
| - | 2194809 | Probe, Temp, Sensor, Danfoss |

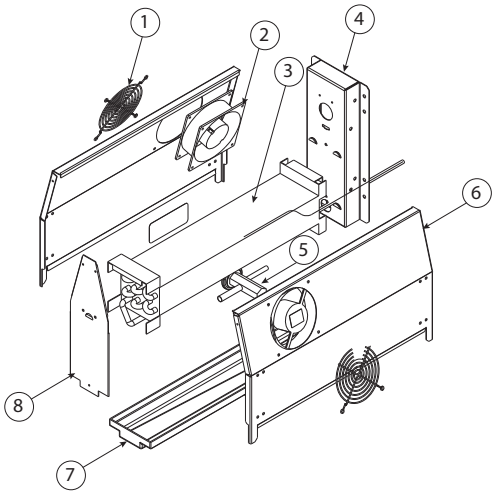


| Key | Part Number | Description |
|---|---|---|
| - | **000-248-0030** | **Coil Assembly, R404A, Ref** |
| 1 | 2160024 | Guard, fan, 4.7" |
| 2 | 2160023 | Fan, axiel, 120V |
| 3 | 3516095 | Coil, evaporator |
| 4 | 030-232-0003 | Back, evaporator, enclosure |
| 5 | 3516273 | Expansion valve, 1/4, R-404a |
| 6 | 030-233-0001 | Side, coil, angled |
| 7 | 075-231-0033 | Drip pan, evaporator |
| 8 | 030-234-0003 | Front, coil |
| - | 2184317 | Harness, coil |
| - | 2194808 | Probe, Defrost, Danfoss, Control |
| - | 2194809 | Probe, Temp, Sensor, Danfoss |

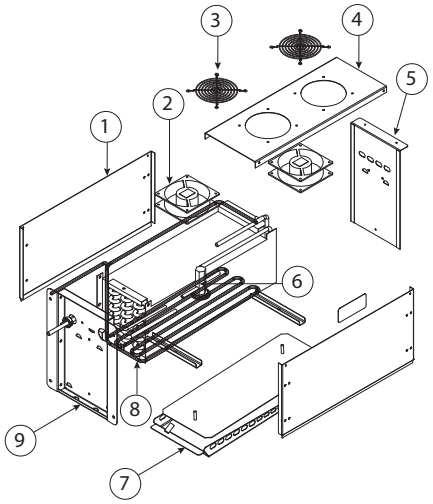


| Key | Part Number | Description |
|---|---|---|
| - | **000-249-0004** | **Coil Assembly, Evap, Freezer** |
| 1 | 030-262-0001 | Side, evaporator |
| 2 | 2160023 | Fan, axiel |
| 3 | 2160024 | Guard, fan, 4.7", SC120-W2 |
| 4 | 030-260-0001 | Top, frz, evaporator |
| 5 | 030-259-0000 | Front, enclosure |
| 6 | 3516271 | Valve, expansion, R404a |
| 7 | 265-261-0001 | Pan, freezer evaporator |
| 8 | 3516073 | Coil, Evaporator |
| 9 | 030-263-0001 | Back, evaporator |
| - | 2184318 | Harness, coil, frz, male |
| - | 2194808 | Probe, Defrost, Danfoss, Control |
| - | 2194809 | Probe, Temp, Sensor, Danfoss |

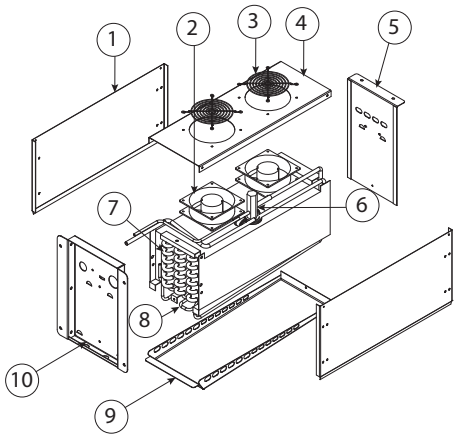


| Key | Part Number | Description |
|---|---|---|
| - | **000-249-0006** | **Coil Assembly, Freezer Evap, Remote** |
| 1 | 030-262-0001 | Side, evaporator |
| 2 | 2160023 | Fan, axiel |
| 3 | 2160024 | Guard, fan, 4.7", SC120-W2 |
| 4 | 030-260-0001 | Top, frz, evaporator |
| 5 | 030-259-0000 | Front, enclosure |
| 6 | 3516271 | Valve, expansion, R404a |
| 7 | 3516073 | Coil, Evaporator |
| 8 | 2194034 | Heater, Defrost |
| 9 | 265-261-0001 | Pan, freezer evaporator |
| 10 | 030-263-0001 | Back, evaporator |
| - | 2194046 | Control, Limit, Fan Delay/Defrost |
| - | 2194631 | Fuse, Defrost Heater, 7 Amp |
| - | 2184323 | Harness, coil, frz, male, remote |

# Replacement Parts - Drawer Assemblies

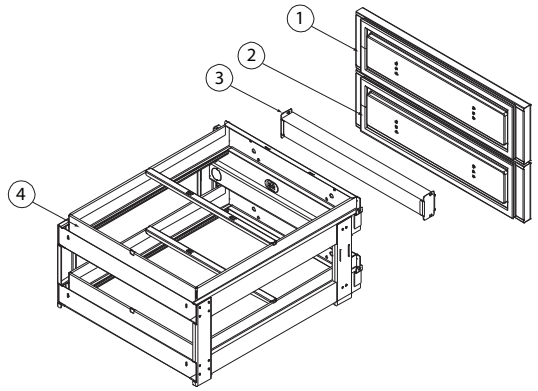


| *Key* | *Part Number* | *Description* |
|---|---|---|
| **-** | **000-AEW-0063** | **Assembly, drawer, 32" lo profile** |
| 1 | 000-328-0033 | Front, drawer, 32" lo profile |
| 2 | 1701197 | Gasket, drawer, 32" lo profile |
| 3 | 000-315-0033 | Mullion, refrigerator, 32" drawer |
| 4 | 000-333-0043 | Assembly, drawer box, 32" |
| - | 3234925 | Interm profile, LH (with nylon rollers) |
| - | 3234926 | Interm profile, RH (with nylon rollers) |

| - | **000-AEW-0064** | **Assembly, drawer 27" lo profile** |
|---|---|---|
| 1 | 000-328-0032 | Front, drawer 27" lo profile |
| 2 | 1701196 | Gasket, drawer 27" lo profile |
| 3 | 000-315-0032 | Mullion, refrigerator, 27" drawer |
| 4 | 000-333-0044 | Assembly, drawer box, 27" lo profile |
| - | 3234925 | Interm profile, LH (with nylon rollers) |
| - | 3234926 | Interm profile, RH (with nylon rollers) |

| - | **000-AEW-0066** | **Assembly, drawer, 19" lo profile** |
|---|---|---|
| 1 | 000-328-0030 | Front, drawer, 19" |
| 2 | 1701194 | Gasket, drawer 19" lo profile |
| 3 | 000-315-0030 | Mullion, refrigerator, 19" drawer |
| 4 | 000-333-0046 | Assembly, drawer box, 19" |
| - | 3234925 | Interm profile, LH (with nylon rollers) |
| - | 3234926 | Interm profile, RH (with nylon rollers) |

| - | **000-AEW-006G** | **Assembly, drawer, 32" freezer, lo profile** |
|---|---|---|
| 1 | 000-328-0033 | Front, drawer, 32" lo profile |
| 2 | 1701197 | Gasket, drawer, 32" lo profile |
| 3 | 000-315-003B | Mullion, Freezer, 32" Drawer |
| 4 | 000-333-0043 | Assembly, drawer box, 32" |
| - | 3234925 | Interm profile, LH (with nylon rollers) |
| - | 3234926 | Interm profile, RH (with nylon rollers) |

| - | **000-AEW-006H** | **Assembly, drawer, 27" freezer, lo profile** |
|---|---|---|
| 1 | 000-328-0032 | Front, drawer 27" lo profile |
| 2 | 1701196 | Gasket, drawer 27" lo profile |
| 3 | 000-315-003A | Mullion, Freezer, 27" Drawer |
| 4 | 000-333-0044 | Assembly, drawer box, 27" lo profile |
| - | 3234925 | Interm profile, LH (with nylon rollers) |
| - | 3234926 | Interm profile, RH (with nylon rollers) |

| *Key* | *Part Number* | *Description* |
|---|---|---|
| **-** | **000-AEW-006J** | **Assembly, drawer, 19" freezer, lo profile** |
| 1 | 000-328-0030 | Front, drawer, 19" |
| 2 | 1701194 | Gasket, drawer 19" lo profile |
| 3 | 000-315-0038 | Mullion, Freezer, 19" Drawer |
| 4 | 000-333-0046 | Assembly, drawer box, 19" |
| - | 3234925 | Interm profile, LH (with nylon rollers) |
| - | 3234926 | Interm profile, RH (with nylon rollers) |

| - | **000-AEW-007C** | **Drawer system, 32", lo-profile** |
|---|---|---|
| 1 | 000-328-003J | Drawer front, 32" |
| 2 | 1701197 | Gasket, drawer, 32" |
| 3 | 000-315-0033 | Mullion, refrigerator, 32" drawer |
| 4 | 000-333-0043 | Drawer box, 32" |
| - | 3234925 | Track, interm, left hand |
| - | 3234926 | Track, interm, right hand |

| - | **000-AEW-007D** | **Drawer system, 27", lo-profile** |
|---|---|---|
| 1 | 000-328-003I | Drawer front, 27" |
| 2 | 1701196 | Gasket, drawer, 27" |
| 3 | 000-315-0032 | Mullion, refrigerator, 27" drawer |
| 4 | 000-333-0044 | Drawer box, 27" |
| - | 3234925 | Track, interm, left hand |
| - | 3234926 | Track, interm, right hand |

| - | **000-AEW-007F** | **Drawer system, 19", lo-profile** |
|---|---|---|
| 1 | 000-328-003G | Drawer front, 19" |
| 2 | 1701194 | Gasket, drawer, 19" |
| 3 | 000-315-0030 | Mullion, refrigerator, 19" drawer |
| 4 | 000-333-0046 | Drawer box, 19" |
| - | 3234925 | Track, interm, left hand |
| - | 3234926 | Track, interm, right hand |

| - | **000-AEW-007K** | **Assembly, Drawer Sys, FRZ** |
|---|---|---|
| 1 | 000-328-003J | Front, 32 Drawer FRZ 3-HI |
| 2 | 1701195 | Gasket, Drawer, 24, 2-High, Lo |
| 3 | 000-315-003B | Mullion, Freezer, 32" Drawer |
| 4 | 000-333-0043 | Assembly, Drawer Box, 32" |
| - | 3234925 | Interm Profile, LH, Reg |
| - | 3234926 | Interm Profile, RH, Reg |

# Replacement Part Prints

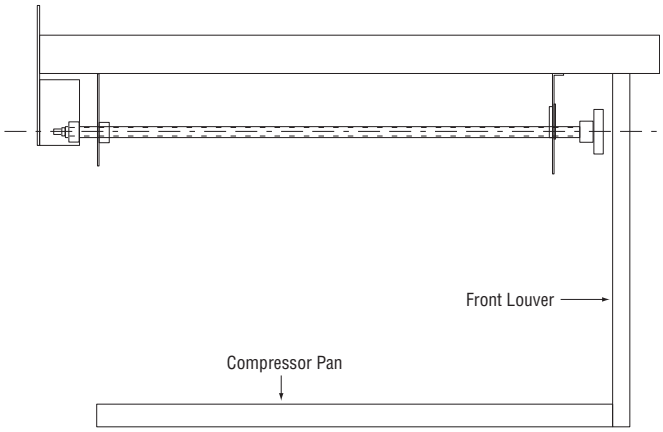


| *Part Number* | *Description* |
|---|---|
| 000-AMF-0031 | Assembly, wall anchor, 14 RT |
| 000-AMF-0032 | Assembly, wall anchor, 16" louver |
| 000-AMF-0033 | Assembly, wall anchor, 18" louver |
| 000-AMF-0034 | Assembly, wall anchor, 24" louver |
| 000-AMF-0030 | Assembly, wall anchor, lo pro |

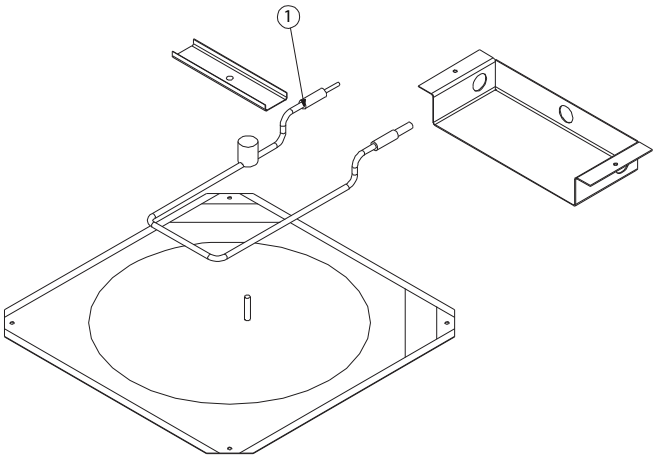


| *Key* | *Part Number* | *Description* |
|---|---|---|
| **-** | **000-AMR-0030** | **Assembly, Condensate Evap Pan** |
| 1 | 2194199 | Element, Heating, Cond Evap |

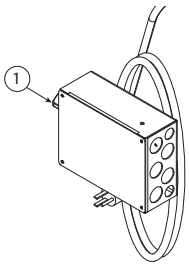


| *Key* | *Part Number* | *Description* |
|---|---|---|
| - | **000-298-003V** | **Control Assembly, Frz, 5-15** |
| 1 | 2194758-4 | Control, Freezer, 115V |
| - | 2190154 | Rocker switch, 20A/125V |

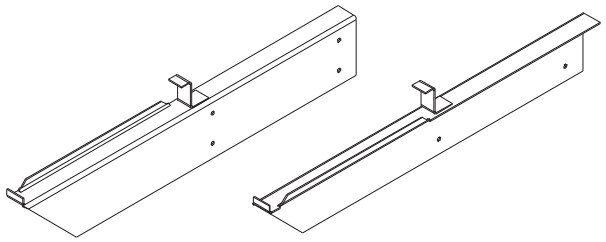

| | |
|---|---|
| 000-405-0031 | Bracket, cutting board, left hand |
| 000-405-0035 | Bracket, cutting board, right hand |

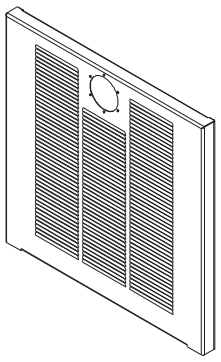

| | |
|---|---|
| 359-478-003I | Louver Panel, 14” |
| 359-478-003J | Louver Panel, 18” |
| 359-478-003L | Louver Panel, 16” |

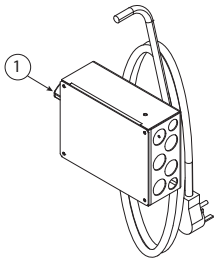


| *Key* | *Part Number* | *Description* |
|---|---|---|
| - | **000-298-003P** | **Control Assembly, Refg, 5-15P** |
| 1 | 2194810 | Control, Danfoss, GDM, 115V |
| 2 | 2190154 | Rocker switch, 20A/125V |

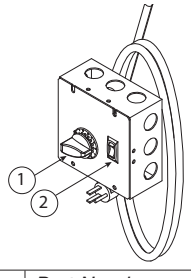


| *Key* | *Part Number* | *Description* |
|---|---|---|
| - | **000-298-003W** | **Control Assembly, Pressure Control, Frz** |
| 1 | 2194758-4 | Control, Freezer, 115V |
| - | 3516247 | Control, Pressure, High |
| - | 2190154 | Rocker switch, 20A/125V |

## Standard Labor Guidelines To Repair Or Replace Parts On Delfield Equipment

Advice and recommendations given by Delfield Service Technicians do not constitute or guarantee any special coverage.

- A maximum of 1-hour is allowed to **diagnose a defective component**.
- A maximum of 1-hour is allowed for **retrieval of parts** not in stock.
- A maximum **travel distance** of 100 miles round trip and 2-hours will be reimbursed.
- Overtime, installation/start-up, normal control adjustments, general maintenance, glass breakage, freight damage, and/or correcting and end-user installation error will not be reimbursed under warranty unless pre-approved with a **Service Work Authorization** from Delfield. You must submit the number with the service claim.

**Labor Of 1 Hour Is Allowed To Replace:**

- Compressor Start Components and Overload Protector
- Defrost Timer
- Drawer Tracks/Cartridges
- Fan Delay/Defrost Termination Switch
- Solenoid Coil
- Thermometer
- Condensate Element
- Door Hinges, Locks, and Gaskets
- Evaporator/Condenser Fan Motor and Blade
- Hi-limit/Thermal Protector Switch
- Thermostat
- Transformer

**Labor Of 2 Hours To Replace:**

- Defrost Element
- Pressure Control
- Locate/Repair Leak
- Solenoid Valve

**Labor Of 3 Hours To Replace:**

- Condenser or Evaporator Coil
- Expansion Valve

**Labor Of 4 Hours To Replace:**

- Compressor

This includes recovery of refrigerant and leak check.

$55.00 maximum reimbursement for refrigerant recovery (includes recovery machine, pump, torch, oil, flux, minor fittings, solder, brazing rod, nitrogen, or similar fees.)

**Refrigerant:**

- R404A A maximum of $15.00/lb. or $1.00/oz. will be reimbursed.

# Standard One Year Limited Warranty — One Year Parts, 90 Day Labor

The Delfield Company ("Delfield") warrants to the Original Purchaser of the Delfield product (herein called the "Unit") that such Unit, and all parts thereof, will be free from defects in material and workmanship under normal use and service for a period of one (1) year from the date of shipment of the Unit to the Original Purchaser or one (1) year from the date of installation if registration is completed one (1) year from installation. During this one year warranty period, Delfield will repair or replace any defective part or portion there of returned to Delfield by the Original Purchaser which Delfield determines was defective due to faulty material or workmanship. Only during the first 90 days of the this one year warranty period, Delfield will, subject to the limits set forth below, pay labor, crating, and freight incurred in the removal of the Unit of defective component and shipment to Delfield. A maximum of 1-hour is allowed to diagnose a defective component. A maximum of 1-hour is allowed for retrieval of parts not in stock. A maximum travel distance of 100 miles round trip and 2-hours will be reimbursed. Overtime, installation/start-up, normal control adjustments, general maintenance, glass breakage, freight damage, delayed site entry because of security or hours of operation and/or correcting an end-user installation error will not be reimbursed under warranty unless pre-approved with a Service Work Authorization from Delfield. Delfield will pay the return costs if the Unit or part thereof was defective.

The term "Original Purchaser" as used herein means that person, firm, association, or corporation for whom the Unit was originally installed.

This warranty does not apply to any Unit or part thereof that has been subjected to misuse, neglect, alteration, or accident, such as accidental damage to the exterior finish, operated contrary to the recommendations specified by Delfield; or repaired or altered by anyone other than Delfield in any way so as to, in Delfield's sole judgment, affect its quality or efficiency. This warranty does not apply to any Unit that has been moved from the location where it was originally installed. This warranty also does not cover the refrigerator drier, door gaskets or the light bulbs used in the Unit. The warranty is subject to the user's normal maintenance and care responsibility as set forth in the Service and Installation Manual, such as cleaning the condenser coil, and is in lieu of all other obligations of Delfield. Delfield neither assumes, nor authorizes any other person to assume for Delfield, any other liability in connection with Delfield's products.

Removal or defacement of the original Serial Number or Model Number from any Unit shall be deemed to release Delfield from all obligations hereunder or any other obligations, express or implied.

Parts furnished by suppliers to Delfield are guaranteed by Delfield only to the extent of the original manufacturer's express warranty to Delfield. Failure of the Original Purchaser to receive such manufacturers warranty shall in no way create any warranty, expressed or implied, or any other obligation or liability on Delfield's part in respect thereof.

Under no condition does this warranty give the Original Purchaser the right to replace the defective Unit with a complete Unit of the same manufacturer or of another make. Unless authorized by Delfield in writing, this warranty does not permit the replacement of any part, including the motor-compressor, to be made with the part of another make or manufacturer.

No claims can be made under this warranty for spoilage of any products for any reason, including system failure.

The installation contractor shall be responsible for building access, entrance and field conditions to insure sufficient clearance to allow any hood(s), vent(s), or Unit(s) if necessary, to be brought into the building. Delfield will not be responsible for structural changes or damages incurred during installation of the Unit or any exhaust system.

Delfield shall not be liable in any manner for any default or delay in performance hereunder caused by or resulting from any contingency beyond Delfield's control, including, but not limited to, war, governmental restrictions or restraints, strike, lockouts, injunctions, fire, food, acts of nature, short or reduced supply of raw materials, or discontinuance of the parts by the original part manufacturer.

Except as provided in any Additional Four Year Protection Plan, if applicable, and the Service Labor Contract, if applicable, the preceding paragraphs set forth the exclusive remedy for all claims based on failure of, or defect for Delfield products sold hereunder, whether the failure or defect arises before or during the warranty period, and whether a claim, however instituted, is based on contract, indemnity, warranty, tort (including negligence), strict liability, implied by statute, common-law or otherwise , and Delfield and its agents shall not be liable for any claims for personal injuries or consequential damages or loss, howsoever caused. Upon the expiration of the warranty period, all such liability shall terminate. THE FOREGOING WARRANTIES ARE EXCLUSIVE AND IN LIEU OF ALL OTHER WARRANTIES, WHETHER WRITTEN, ORAL, IMPLIED OR STATUTORY. NO IMPLIED WARRANTY OF MERCHANTABILITY OR FITNESS FOR PARTICULAR PURPOSE SHALL APPLY, DELFIELD DOES NOT WARRANT ANY PRODUCTS OR SERVICES OF OTHERS

This warranty supersedes and excludes any prior oral or written representations or warranties. The sole and exclusive remedies of any person relating to the Unit, and the full liability of Delfield for any breach of this warranty, will be as provided in this warranty.

Other than this Delfield Standard One Year Limited Warranty, any applicable Delfield Additional Four Year Protection Plan or applicable Delfield Service Labor Contract, the Original Purchaser agrees and acknowledges that no other warranties are offered or provided in connection with or for the Unit or any other part thereof. The liability of Delfield for breach of any warranty obligation hereunder is limited to: (i) the repair or replacement of the Delfield Product on which the liability is based, or with respect to services, re-performance of the services; or (ii) at Delfield's option, the refund of the amount paid for said equipment or services. Any breach by Delfield with respect to any item or unit of equipment or services shall be deemed a breach with respect to that item or unit or service only

IN NO EVENT WILL DELFIELD BE LIABLE FOR SPECIAL, INCIDENTAL OR CONSEQUENTIAL DAMAGES, OR FOR DAMAGES IN THE NATURE OF PENALTIES.

If shipment of a replacement part is requested prior to the arrival in the Delfield factory of the part claimed to be defective, the Original Purchaser must accept delivery of the replacement part on a C.O.D. basis, with credit being issued after the part has been received and inspected at Delfield's plant and determined by Delfield to be within this warranty.

# Additional Four Year Protection Plan — For Motor-Compressor Only

| Delfield Model# | Serial# | Installation Date |
|---|---|---|
| | | |

In addition to the Standard One Year Warranty on the Motor-Compressor contained in the above listed Delfield product (the "Unit"), The Delfield Company ("Delfield") also agrees to repair, or exchange with similar or interchangeable parts in design and capacity at Delfield's option, the defective Motor-Compressor contained in the Unit (the "Motor-Compressor"), or any part thereof, for the Original Purchaser only, at any time during the four (4) years following the initial one (1) year period commencing on the date of installation for the Original Purchaser. This additional Warranty is only available if the Motor-Compressor is inoperative due to defects in material or factory workmanship, as determined by Delfield in its sole judgment and discretion. The Original Purchaser shall be responsible for returning the defective Motor-Compressor to Delfield prepaid, F.O.B. at the address shown on the back cover of this manual.

The term "Original Purchaser" as used herein shall be deemed to mean that person, firm, association, or corporation for whom the equipment was originally installed.

The term "Motor-Compressor" as used herein does not include unit base, air or water-cooled condenser, receiver, electrical accessories such as relay, capacitors, refrigerant controls, or condenser fan/motor assembly. This warranty does not cover labor charges incidental to the replacement of parts. This warranty further does not include any equipment to which said condensing unit is connected, such as cooling coils, temperature controls or refrigerant metering devices. This warranty shall be void if the Motor-Compressor, in Delfield's sole judgment, has been subjected to misuse, neglect, alteration or accident, operated contrary to the recommendations specified by the Unit manufacturer, repaired or altered by anyone other than Delfield in any way so as, in Delfield's sole judgment, to affect its quality or efficiency or if the serial number has been altered, defaced or removed. This Warranty does not apply to a Motor-Compressor in any Unit that has been moved from the location where it was originally installed. The addition of methyl chloride to the condensing unit or refrigeration system shall void this warranty.

General Conditions

Delfield shall not be liable in any manner for any default or delay in performance thereunder caused by or resulting from any contingency beyond Delfield's control including, but not limited to, war, governmental restrictions or restraints, strikes, lockouts, injunctions, fire, floods, acts of nature, short or reduced supply of raw material or discontinuance of any part or the Motor-Compressor by the unit manufacturer.

Replacement of a defective Motor-Compressor is limited to one (1) Motor-Compressor by us during the four (4) year period. Delfield shall replace the Motor-Compressor part only at no charge.

This Warranty does not give the Original Purchaser of the Motor-Compressor the right to purchase a complete re placement Motor-Compressor of the same make or of another make. It further does not permit the replacement to be made with a Motor-Compressor of another kind unless authorized by Delfield. In the event Delfield authorizes the Original Purchaser to purchase a replacement Motor-Compressor locally, only the wholesale cost of the Motor-Compressor is refundable.

Expressly excluded from this warranty are damages resulting from spoilage of goods.

Except as provided in any applicable Standard One Year Limited Warranty or applicable Service Labor Contract, the foregoing is exclusive and in lieu of all other war ran ties, whether written or oral, express or implied. This Warranty supersedes and excludes any prior oral or written representations or warranties. Delfield expressly disclaims any implied warranties of merchantability, fitness for a particular purpose or compliance with any law, treaty, rule or regulation relating to the discharge of substances into the environment. The sole and exclusive remedies of any person relating to the Motor-Compressor, and the full liability of Delfield for any breach of this Warranty, will be as provided in this Warranty.

Other than any applicable Delfield Standard One Year Limited Warranty, this Delfield Additional Four Year Protection Plan and any applicable Delfield Service Labor Contract, the Original Purchaser agrees and acknowledges that no other warranties are offered or provided in connection with or for the Motor-Compressor or any part thereof. In no event will Delfield be liable for special, incidental or consequential damages, or for damages in the nature of penalties.

# Drawer Warranty - One/ Ten Year Parts * 90 Day labor

The Delfield Company ("Delfield") warrants to the Original Purchaser of the Delfield drawer system (herein called the "Unit") that such Unit, and all parts thereof, will be free from defects in material and workmanship under normal use and service for a period of one (1) year from the date of shipment of the Unit to the Original Purchaser or, if the Original Purchaser returns the warranty card completely filled out including the date of installation within thirty (30) days of receipt of the Unit, one (1) year from the date of installation. In addition, Delfield warrants the left and right intermediate track deemed the "Roller track assembly" profiles, this is the part that contains all the Delrin rollers for ten years. These are the only parts falling under the 10 year warranty. During this one year warranty period, Delfield will repair or replace any defective part or portion thereof returned to Delfield by the Original Purchaser which Delfield determines was defective due to faulty material or workmanship. The Original Purchaser will pay all labor, crating, freight and related costs incurred in the removal of the Unit or defective component and shipment to Delfield, except that during a period of either ninety (90) days from the date of shipment of the Unit to the Original Purchaser or, if the Original Purchaser returns the warranty card completely filled out including the date of installation within thirty (30) days of receipt of the Unit, ninety (90) days from the date of installation Delfield will pay all related labor costs. Delfield will pay the return costs if the Unit or part thereof was defective.

The term "Original Purchaser" as used herein means that person, firm, association, or corporation for whom the Unit was originally installed.

This Warranty does not apply to any Unit or part hereof that has been subjected to misuse, neglect, alteration, or accident, such as accidental damage to the exterior finish; operated contrary to the recommendations specified by Delfield; or repaired or altered by anyone other than Delfield in any way so as to, in Delfield's sole judgment, affect its quality or efficiency. This Warranty does not apply to any Unit that has been moved from the location where it was originally installed. The warranty is subject to the user's normal maintenance and care responsibility as set forth in the Service and Installation Manual. Delfield neither assumes, nor authorizes any other person to assume for Delfield, any other liability in connection with Delfield's products.

Removal or defacement of the original Serial Number or Model Number from any Unit shall be deemed to release Delfield from all obligations hereunder or any other obligations, express or implied.

Parts furnished by suppliers to Delfield are guaranteed by Delfield only to the extent of the original manufacturer's express warranty to Delfield. Failure of the Original Purchaser to receive such manufacturer's warranty shall in no way create any warranty, express or implied, or any other obligation or liability on Delfield's part in respect thereof.

If shipment of a replacement part is requested prior to the arrival in the Delfield factory of the part claimed to be defective, Delfield will send a UPS call tag to the customer to receive damaged or defective parts back for inspection. Delfield must receive the parts back to redeem warranty coverage from Fulterer. It is also very important to receive these parts to determine if any future change to the design is needed.

Under no condition does this Warranty give the Original Purchaser the right to replace the defective Unit with a complete Unit of the same manufacturer or of another make. Unless authorized by Delfield in writing, this Warranty does not permit the replacement of any part to be made with the part of another make or manufacturer.

No claims can be made under this Warranty for spoilage of products for any reason, including system failure.

Delfield shall not be liable in any manner for any default or delay in performance hereunder caused by or resulting from any contingency beyond Delfield's control, including, but not limited to, war, governmental restrictions or restraints, strikes, lockouts, injunctions, fire, floods, acts of nature, short or reduced supply of raw materials, or discontinuance of the parts by the original part manufacturer.

Except as provided in any Additional Four Year Protection Plan, if applicable, and the Service Labor Contract, if applicable, the foregoing is exclusive and in lieu of all other warranties, whether written or oral, express or implied. This Warranty supersedes and excludes any prior oral or written representations or warranties. Delfield expressly disclaims any implied warranties of merchantability, fitness for a particular purpose or compliance with any law, treaty, rule or regulation relating to the discharge of substances into the environment. The sole and exclusive remedies of any person relating to the Unit, and the full liability of Delfield for any breach of this Warranty, will be as provided in this Warranty.

Other than this Delfield Standard One Year Limited Warranty, any applicable Delfield Additional Four Year Protection Plan or applicable Delfield Service Labor Contract, the Original Purchaser agrees and acknowledges that no other warranties are offered or provided in connection with or for the Unit or any part thereof.

In no event will Delfield be liable for special, incidental or consequential damages, or for damages in the nature of penalties.

# Notes

# Notes

Delfield




***Mt. Pleasant, MI***




***Covington, TN***

*Thank you for choosing Delfield!*

Help is a phone call away! Help our team of professional, courteous customer service reps by having your model number and serial number available at the time of your call (800) 733-8829

Model: _____S/N: _____

Installation Date: _____

Manitowoc STAR CERTIFIED SERVICE AND PARTS

**For a list of Delfield's authorized parts depots, visit our website at www.delfield.com**

Delfield

980 S. Isabella Rd., Mt. Pleasant, MI 48858, U.S.A. • (989) 773-7981 or (800) 733-8829 • Fax (989) 773-3210 • www.delfield.com
Delfield reserves the right to make changes in design or specifications without prior notice. ©2012 The Delfield Company. All rights reserved. Printed in the U.S.A.
DM2000_17 07/12