DELFIELD®

F5 and F15 Series
Refrigerated Display Cases

Original Instructions
Installation, Operation and Maintenance Manual

This manual is updated as new information and models are released. Visit our website for the latest manual.

Part Number: 9291460 11/17

WELBILT®

Safety Notices

⚠ Warning

Read this manual thoroughly before operating, installing or performing maintenance on the equipment. Failure to follow instructions in this manual can cause property damage, injury or death.

⚠ DANGER

Do not install or operate equipment that has been misused, abused, neglected, damaged, or altered/ modified from that of original manufactured specifications.

⚠ DANGER

Keep power cord AWAY from HEATED surfaces. DO NOT immerse power cord or plug in water. DO NOT let power cord hang over edge of table or counter.

⚠ DANGER

All utility connections and fixtures must be maintained in accordance with local and national codes.

⚠ DANGER

Use appropriate safety equipment during installation and servicing.

⚠ Warning

Do not damage the refrigeration circuit when installing, maintaining or servicing the unit.

⚠ Warning

Authorized service representatives are obligated to follow industry standard safety procedures, including, but not limited to, local/national regulations for disconnection / lock out / tag out procedures for all utilities including electric, gas, water and steam.

⚠ Warning

Do not store or use gasoline or other flammable vapors or liquids in the vicinity of this or any other appliance. Never use flammable oil soaked cloths or combustible cleaning solutions, for cleaning.

⚠ Warning

This product contains chemicals known to the State of California to cause cancer and/or birth defects or other reproductive harm. Operation, installation, and servicing of this product could expose you to airborne particles of glasswool or ceramic fibers, crystalline silica, and/or carbon monoxide. Inhalation of airborne particles of glasswool or ceramic fibers is known to the State of California to cause cancer. Inhalation of carbon monoxide is known to the State of California to cause birth defects or other reproductive harm.

⚠ Warning

Do not use electrical appliances or accessories other than those supplied by the manufacturer.

⚠ Warning

Use caution when handling metal surface edges of all equipment.

⚠ Warning

This appliance is not intended for use by persons (including children) with reduced physical, sensory or mental capabilities, or lack of experience and knowledge, unless they have been given supervision concerning use of the appliance by a person responsible for their safety. Do not allow children to play with this appliance.

Notice

Proper installation, care and maintenance are essential for maximum performance and trouble-free operation of your equipment. Visit our website www.mtwkitchencare.com for manual updates, translations, or contact information for service agents in your area.

Table of Contents

Section 1
General Information

Model Numbers **5**
Serial Number Information **5**
Warranty Information **5**
Regulatory Certifications **5**
Domestic Models 5
Export Models 5

Section 2
Installation

Location **7**
Weight of Equipment **8**
Clearance Requirements **8**
Dimensions **8**
F15 Leg & Caster Installation **9**
Leveling **9**
Stabilizing **9**
Shelf Installation **9**
F5 Counter Installation For 36" & 48" Units **10**
F5 Counter Installation For 60" & 72" Units **11**
Electrical Service **12**
Voltage 12
Ground Fault Circuit Interrupter 12
Rated Amperages, Horsepower, Voltage & Power Cord Chart 12
Drain Connections **13**
Refrigeration **13**
Remote Option Installation **14**
F5 Remote Models 14
F15 Remote Models 14

Section 3
Operation

Refrigerated Display Cases **15**
Display Lock Operation **15**
115Volt Power Switch **16**
115Volt Light Switch **16**
115Volt Temperature Controls **16**
Temperature Control & Display 17
115Volt F15 Pressure Control **18**
Changing Display from Fahrenheit to Celsius on ERC112 Control 19
230-240 Volt Export Operation **20**

Section 4
Maintenance

General Cleaning **21**
Interior Cleaning **22**
Gaskets 22
Preventing Blower Coil Corrosion 22
Exterior Cleaning **22**
Drain 22
Cleaning The Condenser Coil **23**
Cleaning The Condensate Evaporator **23**
Remote Models Only 23
Door Maintenance **23**
Doors With Hinges 23
Sliding Doors 23

Section 1
General Information

Model Numbers

This manual covers the following refrigerated display cases:

Mirrored Back	Pass-thru	See-thru
Self-Contained Drop-In		
F5MC36DV	F5PC36DV	F5SC36DV
F5MC48DV	F5PC48DV	F5SC48DV
F5MC60DV	F5PC60DV	F5SC60DV
F5MC72DV	F5PC72DV	F5SC72DV
Self-Contained Serview		
F15MC48DV	F15PC48DV	F15SC48DV
F15MC60DV	F15PC60DV	F15SC60DV
F15MC72DV	F15PC72DV	F15SC72DV

Export Numbers

Mirrored Back	Pass-thru	See-thru
Export Self-Contained Drop-In		
F5MC36D-E	F5PC36D-E	F5SC36D-E
F5MC48D-E	F5PC48D-E	F5SC48D-E
F5MC60D-E	F5PC60D-E	F5SC60D-E
F5MC72D-E	F5PC72D-E	F5SC72D-E
Export Self-Contained Serview		
F15MC48D-E	F15PC48D-E	F15SC48D-E
F15MC60D-E	F15PC60D-E	F15SC60D-E
F15MC72D-E	F15PC72D-E	F15SC72D-E

Serial Number Information

The serial number is on the identification plate that also includes the model number.

- Self-contained F5 series identification plate is located near the condensing unit.
- The serial number on all self-contained F15 series units is located behind the compressor housing.

Always have the serial number of your unit available when calling for parts or service.

Warranty Information

Visit www.delfield.com/warranty to:

- Register your product for warranty.
- Verify warranty information.
- View and download a copy of your warranty.

Regulatory Certifications

DOMESTIC MODELS

115Volt models are certified by:

- National Sanitation Foundation (NSF)
- Underwriters Laboratories (UL)
- Underwriters Laboratories of Canada (cUL)

EXPORT MODELS

Export models are certified by:

- National Sanitation Foundation (NSF)
- Technical Inspection Association
- European Conformity

THIS PAGE INTENTIONALLY LEFT BLANK

Section 2
Installation

⚠ DANGER

Installation must comply with all applicable fire and health codes in your jurisdiction.

Location

⚠ Warning

This equipment must be positioned so that the plug is accessible unless other means for disconnection from the power supply (e.g., circuit breaker or disconnect switch) is provided.

⚠ Warning

Adequate means must be provided to limit the movement of this appliance without depending on or transmitting stress to the electrical conduit or gas lines.

⚠ Warning

To avoid instability the installation area must be capable of supporting the combined weight of the equipment and product. Additionally the equipment must be level side to side and front to back.

⚠ Warning

This equipment is intended for indoor use only. Do not install or operate this equipment in outdoor areas.

The location selected for the equipment must meet the following criteria. If any of these criteria are not met, select another location.

- Units are intended for indoor use only.
- The location MUST be level, stable and capable of supporting the weight of the equipment.
- The location MUST be free from and clear of combustible materials.
- Equipment MUST be level both front to back and side to side.
- Position the equipment so it will not tip or slide.
- Front casters MUST be locked once positioned.
- Recommended air temperature is 50° - 100°F (10° - 38°C).
- Proper air supply for ventilation is REQUIRED AND CRITICAL for safe and efficient operation.
- Do not obstruct the flow of ventilation air. Make sure the air vents of the equipment are not blocked.
- Do not install the equipment directly over a drain. Steam rising up out of the drain will adversely affect operation, air circulation, and damage electrical / electronic components.

Weight of Equipment

Model	Export Option	Weight
Self-Contained Drop-In		
F5MC36DV	F5MC36D-E	525lbs (238kg)
F5PC36DV	F5PC36D-E	541lbs (245kg)
F5SC36DV	F5SC36D-E	546lbs (248kg)
F5MC48DV	F5MC48D-E	590lbs (268kg)
F5PC48DV	F5PC48D-E	609lbs (276kg)
F5SC48DV	F5SC48D-E	614lbs (279kg)
F5MC60DV	F5MC60D-E	690lbs (313kg)
F5PC60DV	F5PC60D-E	711lbs (323kg)
F5SC60DV	F5SC60D-E	718lbs (326kg)
F5MC72DV	F5MC72D-E	790lbs (358kg)
F5PC72DV	F5PC72D-E	815lbs (370kg)
F5SC72DV	F5SC72D-E	818lbs (371kg)
Self-Contained Serview		
F15MC48DV	F15MC48D-E	759lbs (344kg)
F15PC48DV	F15PC48D-E	807lbs (366kg)
F15SC48DV	F15SC48D-E	786lbs (357kg)
F15MC60DV	F15MC60D-E	949lbs (430kg)
F15PC60DV	F15PC60D-E	1009lbs (458kg)
F15SC60DV	F15SC60D-E	983lbs (446kg)
F15MC72DV	F15MC72D-E	1110lbs (503kg)
F15PC72DV	F15PC72D-E	1159lbs (526kg)
F15SC72DV	F15SC72D-E	1140lbs (517kg)

Clearance Requirements

- Keep the vents clean and free of obstruction.
- Casters or optional legs must be used and not removed.

Dimensions

Model	Length	Depth	Height
Self-Contained Drop-In			
F5MC36DV	36″ (91cm)	31.5″ (80cm)	57″ (145cm)
F5PC36DV	36″ (91cm)	33.38″ (85cm)	57″ (145cm)
F5SC36DV	36″ (91cm)	33.38″ (85cm)	57″ (145cm)
F5MC48DV	48″ (122cm)	31.5″ (80cm)	57″ (145cm)
F5PC48DV	48″ (122cm)	33.38″ (85cm)	57″ (145cm)
F5SC48DV	48″ (122cm)	33.38″ (85cm)	57″ (145cm)
F5MC60DV	60″ (152cm)	31.5″ (80cm)	57″ (145cm)
F5PC60DV	60″ (152cm)	33.38″ (85cm)	57″ (145cm)
F5SC60DV	60″ (152cm)	33.38″ (85cm)	57″ (145cm)
F5MC72DV	72″ (183cm)	31.5″ (80cm)	57″ (145cm)
F5PC72DV	72″ (183cm)	33.38″ (85cm)	57″ (145cm)
F5SC72DV	72″ (183cm)	33.38″ (85cm)	57″ (145cm)
Self-Contained Serview			
F15MC48DV	48″ (122cm)	31.5″ (80cm)	78″ (198cm)
F15PC48DV	48″ (122cm)	33.38″ (85cm)	78″ (198cm)
F15SC48DV	48″ (122cm)	33.38″ (85cm)	78″ (198cm)
F15MC60DV	60″ (152cm)	31.5″ (80cm)	78″ (198cm)
F15PC60DV	60″ (152cm)	33.38″ (85cm)	78″ (198cm)
F15SC60DV	60″ (152cm)	33.38″ (85cm)	78″ (198cm)
F15MC72DV	72″ (183cm)	31.5″ (80cm)	78″ (198cm)
F15PC72DV	72″ (183cm)	33.38″ (85cm)	78″ (198cm)
F15SC72DV	72″ (183cm)	33.38″ (85cm)	78″ (198cm)
Export Self-Contained Drop-In			
F5MC36D-E	36″ (91cm)	31.5″ (80cm)	57.5″ (146cm)
F5PC36D-E	36″ (91cm)	33.38″ (85cm)	57.5″ (146cm)
F5SC36D-E	36″ (91cm)	33.38″ (85cm)	57.5″ (146cm)
F5MC48D-E	48″ (122cm)	31.5″ (80cm)	57.5″ (146cm)
F5PC48D-E	48″ (122cm)	33.38″ (85cm)	57.5″ (146cm)
F5SC48D-E	48″ (122cm)	33.38″ (85cm)	57.5″ (146cm)
F5MC60D-E	60″ (152cm)	31.5″ (80cm)	57.5″ (146cm)
F5PC60D-E	60″ (152cm)	33.38″ (85cm)	57.5″ (146cm)
F5SC60D-E	60″ (152cm)	33.38″ (85cm)	57.5″ (146cm)
F5MC72D-E	72″ (183cm)	31.5″ (80cm)	57.5″ (146cm)
F5PC72D-E	72″ (183cm)	33.38″ (85cm)	57.5″ (146cm)
F5SC72D-E	72″ (183cm)	33.38″ (85cm)	57.5″ (146cm)
Export Self-Contained Serview			
F15MC48D-E	48″ (122cm)	31.5″ (80cm)	78″ (198cm)
F15PC48D-E	48″ (122cm)	33.38″ (85cm)	78″ (198cm)
F15SC48D-E	48″ (122cm)	33.38″ (85cm)	78″ (198cm)
F15MC60D-E	60″ (152cm)	31.5″ (80cm)	78″ (198cm)
F15PC60D-E	60″ (152cm)	33.38″ (85cm)	78″ (198cm)
F15SC60D-E	60″ (152cm)	33.38″ (85cm)	78″ (198cm)
F15MC72D-E	72″ (183cm)	31.5″ (80cm)	78″ (198cm)
F15PC72D-E	72″ (183cm)	33.38″ (85cm)	78″ (198cm)
F15SC72D-E	72″ (183cm)	33.38″ (85cm)	78″ (198cm)

Model	Shelf Area	Display Volume	Base Volume
Self-Contained Drop-In			
F5MC36DV	14.2ft^2	16.2ft^3	NA
F5PC36DV	15.5ft^2	18.1ft^3	NA
F5SC36DV	15.5ft^2	17.6ft^3	NA
F5MC48DV	19.6ft^2	22.3ft^3	NA
F5PC48DV	21.4ft^2	25ft^3	NA
F5SC48DV	21.4ft^2	24.3ft^3	NA
F5MC60DV	25ft^2	28.4ft^3	NA
F5PC60DV	27.3ft^2	31.9ft^3	NA
F5SC60DV	27.3ft^2	31ft^3	NA
F5MC72DV	30.5ft^2	34.6ft^3	NA
F5PC72DV	33.3ft^2	38.8ft^3	NA
F5SC72DV	33.3ft^2	37.7ft^3	NA
Self-Contained Serview			
F15MC48DV	19.6ft^2	22.3ft^3	9.15ft^3
F15PC48DV	21.4ft^2	25ft^3	9.15ft^3
F15SC48DV	21.4ft^2	24.3ft^3	9.15ft^3
F15MC60DV	25ft^2	28.4ft^3	12.13ft^3
F15PC60DV	27.3ft^2	31.9ft^3	12.13ft^3
F15SC60DV	27.3ft^2	31ft^3	12.13ft^3
F15MC72DV	30.5ft^2	34.6ft^3	18.04ft^3
F15PC72DV	33.3ft^2	38.8ft^3	18.04ft^3
F15SC72DV	33.3ft^2	37.7ft^3	18.04ft^3

Model	Shelf Area	Display Volume	Base Volume
Export Self-Contained Drop-In			
F5MC36D-E	14.2ft^2 (13192cm^2)	16.2ft^3 (459L)	NA
F5PC36D-E	15.5ft^2 (14400cm^2)	18.1ft^3 (513L)	NA
F5SC36D-E	15.5ft^2 (14400cm^2)	17.6ft^3 (498L)	NA
F5MC48D-E	19.6ft^2 (18209cm^2)	22.3ft^3 (631L)	NA
F5PC48D-E	21.4ft^2 (19881cm^2)	25ft^3 (708L)	NA
F5SC48D-E	21.4ft^2 (19881cm^2)	24.3ft^3 (688L)	NA
F5MC60D-E	25ft^2 (23226cm^2)	28.4ft^3 (804L)	NA
F5PC60D-E	27.3ft^2 (25363cm^2)	31.9ft^3 (903L)	NA
F5SC60D-E	27.3ft^2 (25363cm^2)	31ft^3 (878L)	NA
F5MC72D-E	30.5ft^2 (28335cm^2)	34.6ft^3 (980L)	NA
F5PC72D-E	33.3ft^2 (30937cm^2)	38.8ft^3 (1099L)	NA
F5SC72D-E	33.3ft^2 (30937cm^2)	37.7ft^3 (1068L)	NA
Export Self-Contained Serview			
F15MC48D-E	19.6ft^2 (18209cm^2)	22.3ft^3 (631L)	9.15ft^3 (259L)
F15PC48D-E	21.4ft^2 (19881cm^2)	25ft^3 (708L)	9.15ft^3 (259L)
F15SC48D-E	21.4ft^2 (19881cm^2)	24.3ft^3 (688L)	9.15ft^3 (259L)
F15MC60D-E	25ft^2 (23226cm^2)	28.4ft^3 (804L)	12.13ft^3 (343L)
F15PC60D-E	27.3ft^2 (25363cm^2)	31.9ft^3 (903L)	12.13ft^3 (343L)
F15SC60D-E	27.3ft^2 (25363cm^2)	31ft^3 (878L)	12.13ft^3 (343L)
F15MC72D-E	30.5ft^2 (28335cm^2)	34.6ft^3 (980L)	18.04ft^3 (511L)
F15PC72D-E	33.3ft^2 (30937cm^2)	38.8ft^3 (1099L)	18.04ft^3 (511L)
F15SC72D-E	33.3ft^2 (30937cm^2)	37.7ft^3 (1068L)	18.04ft^3 (511L)

F15 Leg & Caster Installation

⚠ DANGER

Legs or casters must be installed and the legs or casters must be screwed in completely to prevent bending. When casters are installed the mass of this unit will allow it to move uncontrolled on an inclined surface. These units must be tethered/secured to comply with all applicable codes.

⚠ Warning

The unit must be installed in a stable condition with the front wheels locked. Locking the front casters after installation is the owner's and operator's responsibility.

Leveling

After the cabinet has been placed in the desired location, cabinets with legs must be leveled. Level units from front to back and from side to side. Leveling will insure proper door operation and removal of condensate. Cabinets with casters must have the caster brake set so the cabinet cannot move.

Stabilizing

It is very important that all legs are properly adjusted to keep the cabinet level, evenly distribute the weight and to make sure the unit will not rock, lean or be unstable.

Shelf Installation

Display cases come with three epoxy coated wire shelves that are adjustable in 3-3/4" increments.

F5 Counter Installation For 36″ & 48″ Units

Installation Dimensions	
Counter Cutout	32.62″ x 18.62″ (83cm x 47cm)
2 Louver Cutouts	22″ x 11″ (56cm x 28cm)
Max distance between counter top and louver cutout	4.00″ (10cm)

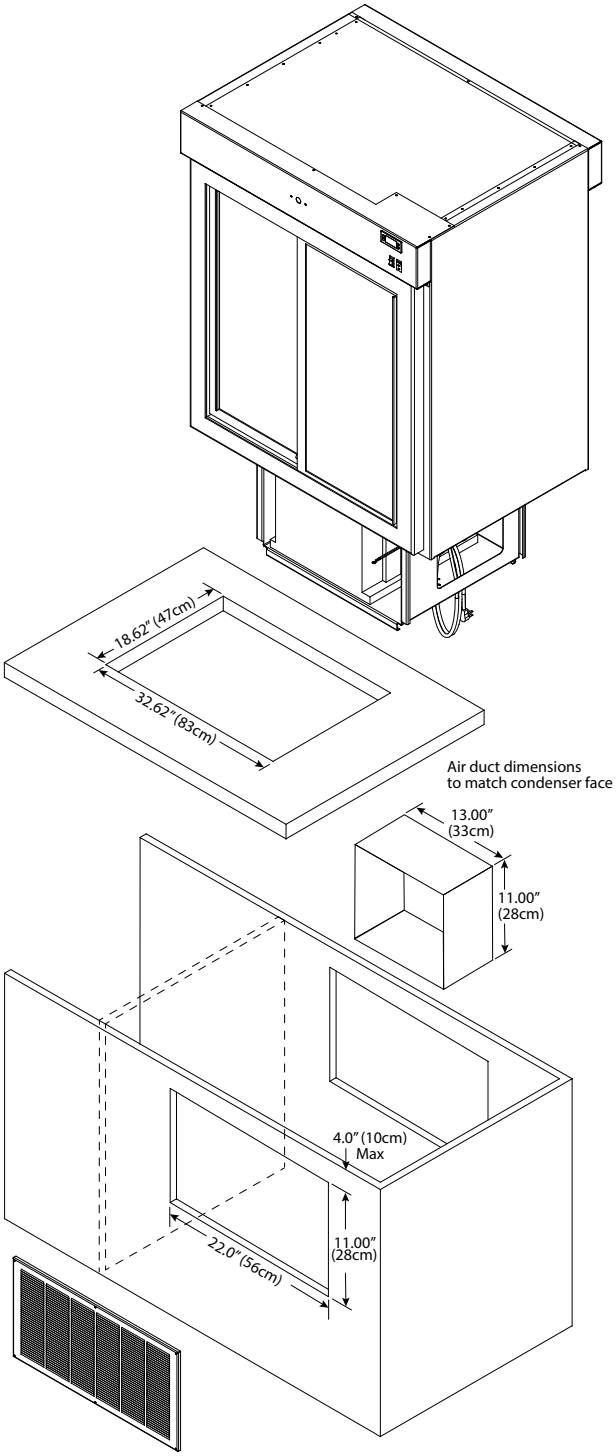

1. Install partitions between F5 refrigerated display case and other electrical appliances if they are located in the same cabinet. Partitions must fully extend front to back and top to bottom.
2. Install a GFCI receptacle a minimum of 14″ (36cm) up from the cabinet bottom inside the partitions.
3. The unit requires airflow to the compressor. Two louvers are provided with each unit.

   NOTE: Any restriction to the proper air flow will void the compressor warranty.

   - Louver cut-outs are 22″ x 11″ (56cm by 28cm).
   - 143in^2 (923cm^2) is required at both the intake and discharge.
   - Cut-outs are to begin a maximum of 4.00″ (10cm) from the counter-top.
   - Install the louvers on the front and back of the cabinet.

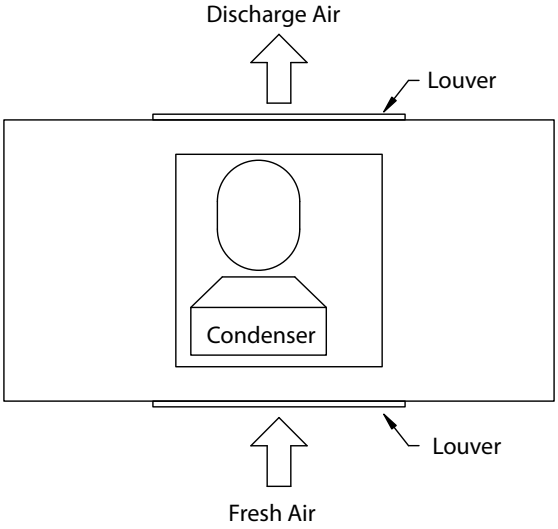

4. Place the condensing unit through the counter cutout.
5. Construct a 13″ x 11″ (33cm x 28cm) air duct (not provided) connecting the condenser face to the louver. This will prevent recirculation of discharge air.

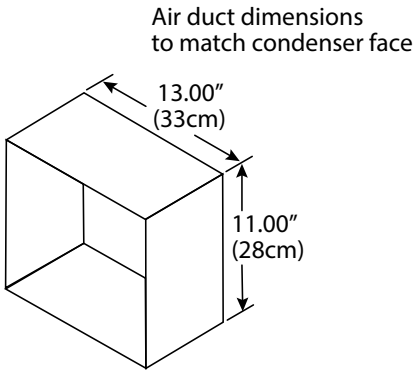

F5 Counter Installation For 60" & 72" Units

Installation Dimensions	
Counter Cutout	32.62" x 18.62" (83cm x 47cm)
2 Louver Cutouts	22" x 11" (56cm x 28cm)
Max distance between counter top and louver cutout	4.00" (10cm)

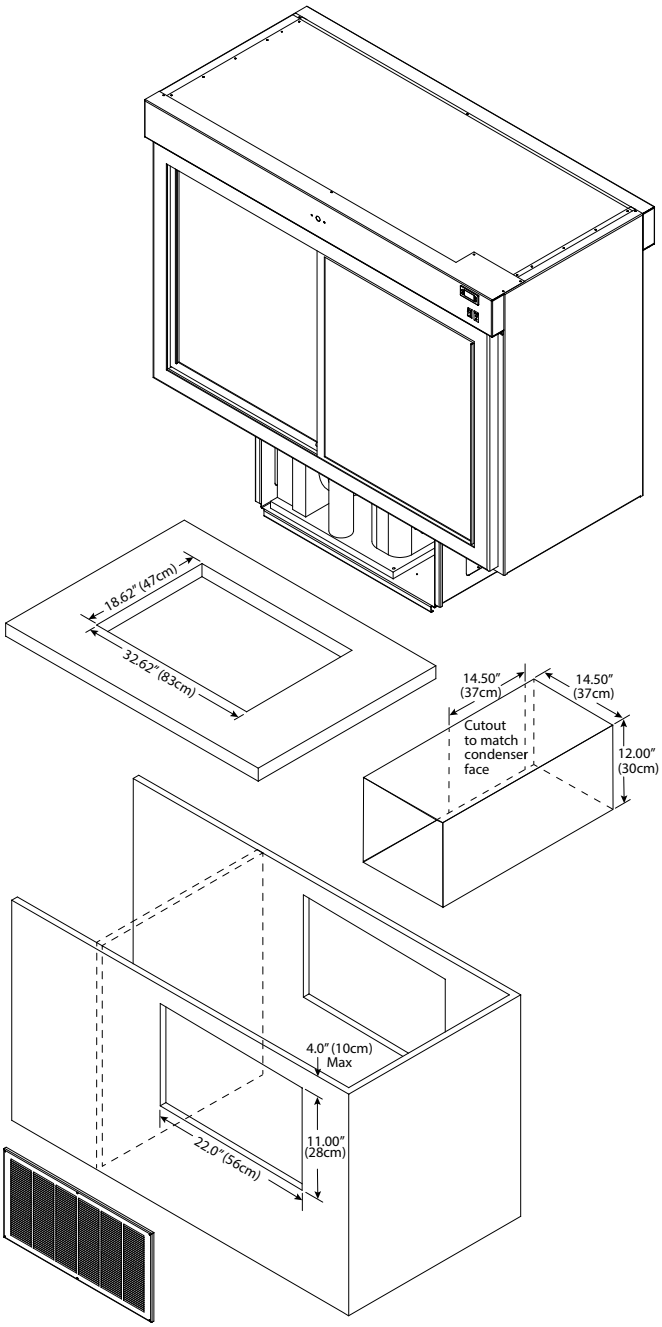

1. Install partitions between F5 refrigerated display case and other electrical appliances if they are located in the same cabinet. Partitions must fully extend front to back and top to bottom.
2. Install a GFCI receptacle a minimum of 14" (36cm) up from the cabinet bottom inside the partitions.
3. The unit requires airflow to the compressor. Two louvers are provided with each unit.

   NOTE: Any restriction to the proper air flow will void the compressor warranty.

   - Louver cut-outs are 22" x 11" (56cm by 28cm).
   - 174in^2 (1123cm^2) is required at both the intake and discharge.
   - Cut-outs are to begin a maximum of 4.00" (10cm) from the counter-top.
   - Install louvers on the front and back of the cabinet or both on the front with a minimum of 12" (30cm) between them.

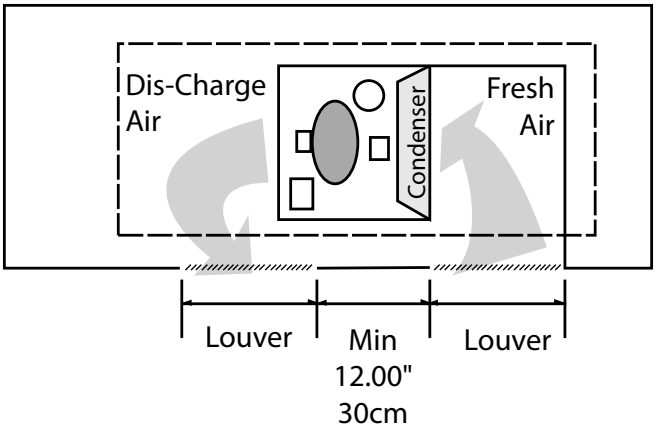

4. Place the condensing unit through the counter cutout.
5. Construct a 14.50" x 12" (37cm x 30cm) air duct (not provided) connecting the condenser face to the louver. This will prevent recirculation of discharge air.

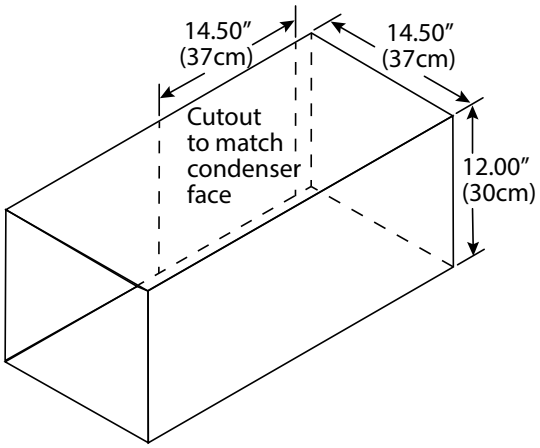

Electrical Service

⚠ DANGER

Check all wiring connections, including factory terminals, before operation. Connections can become loose during shipment and installation.

⚠ Warning

This appliance must be grounded and all field wiring must conform to all applicable local and national codes. Refer to rating plate for proper voltage. It is the responsibility of the end user to provide the disconnect means to satisfy the authority having jurisdiction.

VOLTAGE

All electrical work, including wire routing and grounding, must conform to local, state and national electrical codes.

The following precautions must be observed:

- The equipment must be grounded.
- A separate fuse/circuit breaker must be provided for each unit.
- Check all green ground screws, cables and wire connections to verify they are tight before start-up.

GROUND FAULT CIRCUIT INTERRUPTER

Ground Fault Circuit Interrupter (GFCI/GFI) protection is a system that shuts down the electric circuit (opens it) when it senses an unexpected loss of power, presumably to ground. Welbilt does not recommend the use of GFCI/GFI circuit protection to energize our equipment. If code requires the use of a GFCI/GFI then you must follow the local code. The circuit must be dedicated, sized properly and there must be a panel GFCI/GFI breaker. We do not recommend the use of GFCI/GFI outlets to energize our equipment as they are known for more intermittent nuisance trips than panel breakers.

RATED AMPERAGES, HORSEPOWER, VOLTAGE & POWER CORD CHART

Display cases come with maximum 8ft (2.4m) cord and plug.

Model	Amps	H.P.	Volts, Hertz, Phase	Nema Plug
Self-Contained Drop-In				
F5MC36DV	12	1/2	115,60,1	5-15P
F5PC36DV				
F5SC36DV				
F5MC48DV				
F5PC48DV				
F5SC48DV				
F5MC60DV	16	3/4	115,60,1	5-20P
F5PC60DV				
F5SC60DV				
F5MC72DV				
F5PC72DV				
F5SC72DV				
Self-Contained Serview				
F15MC48DV	16	3/4	115,60,1	5-20P
F15PC48DV				
F15SC48DV				
F15MC60DV				
F15PC60DV				
F15SC60DV				
F15MC72DV				
F15PC72DV				
F15SC72DV				

Model	Amps	Max Lamp Watts	H.P.	Volts, Hertz, Phase	Nema Plug
Export Self-Contained Drop-In					
F5MC36D-E	6.0	25	1/2	230-240, 50,1	Varies per destination
F5PC36D-E					
F5SC36D-E					
F5MC48D-E					
F5PC48D-E					
F5SC48D-E					
F5MC60D-E	6.0	40	3/4	230-240, 50, 1	Varies per destination
F5PC60D-E					
F5SC60D-E					
F5MC72D-E					
F5PC72D-E					
F5SC72D-E					
Export Self-Contained Serview					
F15MC48D-E	6.0	25	3/4	230-240, 50,1	Varies per destination
F15PC48D-E					
F15SC48D-E					
F15MC60D-E	6.0	40	3/4	230-240, 50, 1	Varies per destination
F15PC60D-E					
F15SC60D-E					
F15MC72D-E					
F15PC72D-E					
F15SC72D-E					

Drain Connections

Self-contained models are standard with a condensate evaporator. If, for some reason, a unit does not have a condensate evaporator, or the evaporator fails, the unit's drain must have an outlet to an appropriate drainage area or container.

⚠ Warning

Moisture collecting from improper drainage can create a slippery surface on the floor and a hazard to employees. It is the owner's responsibility to provide a container or outlet for drainage.

Refrigeration

Model	BTU/Hour Capacity		Heat of Rejection		R404A Charge
	Base	Display	Base	Display	
Self-Contained Drop-In					
F5MC36DV	N/A	4780	N/A	425	32oz
F5PC36DV	N/A	4780	N/A	750	32oz
F5SC36DV	N/A	4780	N/A	510	32oz
F5MC48DV	N/A	5335	N/A	520	32oz
F5PC48DV	N/A	5335	N/A	900	32oz
F5SC48DV	N/A	5335	N/A	750	32oz
F5MC60DV	N/A	6900	N/A	600	48oz
F5PC60DV	N/A	6900	N/A	1050	48oz
F5SC60DV	N/A	6900	N/A	714	48oz
F5MC72DV	N/A	7450	N/A	690	48oz
F5PC72DV	N/A	7450	N/A	1200	48oz
F5SC72DV	N/A	7450	N/A	1020	48oz
Self-Contained Serview					
F15MC48DV	3600	6800	190	450	48oz
F15PC48DV	3600	6800	190	780	48oz
F15SC48DV	3600	6800	190	630	48oz
F15MC60DV	3600	6800	220	518	48oz
F15PC60DV	3600	6800	220	900	48oz
F15SC60DV	3600	6800	220	740	48oz
F15MC72DV	3600	7350	250	600	48oz
F15PC72DV	3600	7350	250	860	48oz
F15SC72DV	3600	7350	250	1030	48oz

Export models are temperature class N.

Remote Option Installation

F5 REMOTE MODELS

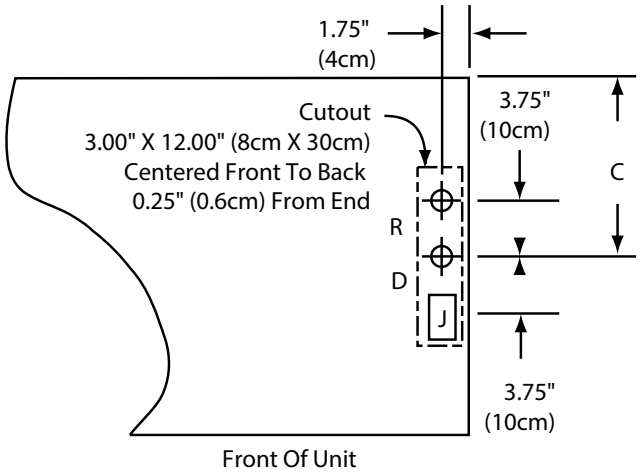

J= Junction Box
R= Refrigeration Lines,
0.25" Liquid,
0.37" Suction
D= 0.50" I.D. Drain

F5 Typical Mechanical Access (Plan View)

F15 REMOTE MODELS

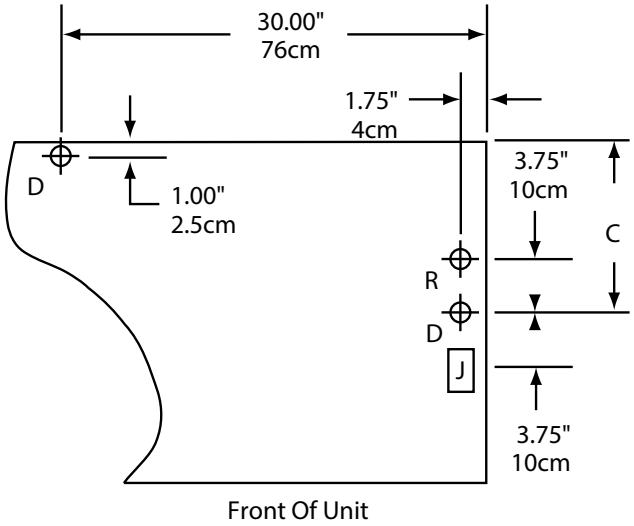

J= Junction Box
R= Refrigeration Lines,
0.25" Liquid,
0.37" Suction
D= 0.50" I.D. Drain

F15 Typical Mechanical Access (Plan View)

Section 3
Operation

⚠ DANGER

The on-site supervisor is responsible for ensuring that operators are made aware of the inherent dangers of operating this equipment.

⚠ DANGER

Do not operate any appliance with a damaged cord or plug. All repairs must be performed by a qualified service company.

⚠ DANGER

Never stand on the unit! They are not designed to hold the weight of an adult, and may collapse or tip if misused in this manner.

⚠ DANGER

Keep power cord AWAY from HEATED surfaces. DO NOT immerse power cord in water. DO NOT let power cord hang over edge of table or counter.

⚠ Warning

Do not contact moving parts.

⚠ Warning

The operator of this equipment is solely responsible for ensuring safe holding temperature levels for all food items. Failure to do so could result in unsafe food products for customers.

⚠ Warning

Do not use electrical appliances or accessories other than those supplied by the manufacturer.

⚠ Warning

All covers and access panels must be in place and properly secured, before operating this equipment.

⚠ Warning

Damp or wet hands may stick to cold surfaces.

⚠ Warning

Maximum weight for shelves is 75 pounds. Overloading shelves can damage equipment or cause bodily injury.

⚠ Warning

Do not block the supply and return air grills or the air space around the air grills. Keep plastic wrappings, paper, labels, etc. from being airborne and lodging in the grills. Failure to keep the air grills clear will result in unsatisfactory operation of the system.

⚠ Caution

Do not throw items into the display case or storage area. Failure to heed this recommendation could result in damage to the interior of the cabinet or to the blower coil.

Refrigerated Display Cases

Delfield display cases are designed to maintain 36°F to 40°F (2°C to 4°C) operational temperature in both the display and storage areas (F15 series only) at 55% or lower ambient relative humidity.

Notice

If humidity is above 55%, condensation on the glass will be present.

Display Lock Operation

At the factory, the keys are taped to the display case.

To lock: Line up key ridge with red dot.
Insert key and rotate one-half turn.
Remove key and push lock bolt in.

To open: Line up ridge with red dot.
Insert key and rotate key one-half turn.
Remove key.

115Volt Power Switch

F5 power switch is located next to the condensing unit. Turn the switch ON to begin operation.

F15 displays cases have one power switch. It is located behind the louvered panel in the mechanical compartment. Turn the switch ON to begin operation.

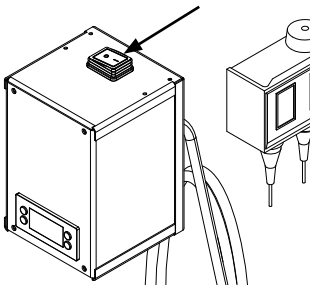

F15 Power Switch On Top of Base Temperature Control

115Volt Light Switch

The lights are controlled by a 3 position switch. The switch is located in the display nosing under the display thermostat. It has the following positions and functions:

- Top position – Motion – the lights will function according to the motion sensors. This is the factory recommended setting.
- Middle position – Off – the light will be off.
- Bottom position – On – the lights will be on.

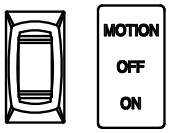

115Volt Temperature Controls

The F5 and F15 display case temperature control is located in the display nosing.

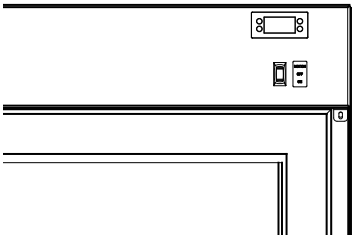

F5 & F15 Display Temperature Control

F15 display cases have two temperature controls. The base temperature control in located in the mechanical compartment.

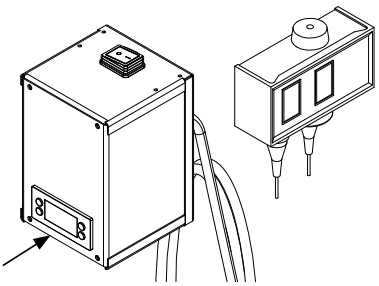

F15 Base Temperature Control

Display cases are factory set at mid-range to maintain about 38ºF (3ºC) box temperature.

1. At initial start-up or anytime power is disconnected, then reconnected to the unit, the control will go into defrost mode.
2. The control will enter a DEFROST mode and the display will read dEF. The compressor and condenser fan as well as the evaporator fan will remain off until this initial defrost is complete. This initial defrost cycle may take up to 35 minutes to complete.
3. The display will continue to read dEF for an additional 30 minutes while the cooling cycle cools the box to the set temperature.
4. Then the digital thermostat will display box temperature.
5. The temperature control will cycle the compressor, evaporator fan motor and condenser fan motor to maintain box temperature at the control setting. For more information see Evaporator Fan Operation on page 18.

Defrost

The temperature control also monitors the evaporator temperature and will turn off the compressor and condenser fan motor when needed to allow accumulated frost on the evaporator to clear. During this defrost cycle, the digital temperature display will read dEF. After the defrost cycle is complete, the temperature control will return to a normal cooling cycle, but the display will continue to read dEF until the evaporator returns to normal cooling temperatures (up to 30 minutes).

The electronic temperature controller monitors evaporator temperature and compressor run time to determine the proper time for a positive defrost cycle. A defrost cycle can occur as often as every 60 minutes under extremely heavy usage. When the controller enters the defrost mode the compressor is shut off and will remain off until the evaporator coil temperature exceeds 41°F or the controller reaches a time limit of 75 minutes. The defrost cycle can last from a minimum of 2 minutes to a maximum of 75 minutes.

TEMPERATURE CONTROL & DISPLAY

Operation / Indication			
Status	**Displayed**	🔊	**Comments**
Normal (°C)	Temp. [°C]		Unit depends on setting (parameters in control)
Normal (°F)	Temp. [°F]		
Show set-point	Temp.		
Set to Defrost	dEF / Temp		Depends on setting (parameters in control or as chosen by upper left button)
Sensor 1 defect	E01 🔔	X	Air sensor
Sensor 2 defect	E02 🔔	X	Coil sensor
Sensor 3 defect	E03 🔔	X	Open
Sensor 4 defect	E04 🔔	X	Open
High temperature alarm	Hi 🔔	X	Automatically switching at 2 sec rate
Low temperature alarm	Lo 🔔	X	
Line voltage too high	uHi 🔔	X	
Line voltage too low	uLi 🔔	X	
Control calls for cooling for more than 24 hours straight	LEA 🔔	X	Time includes defrost. Error will go away if the control cycles off the compressor or if the power is shut off. If error is on a cold pan it could be related to a high ambient temperature or not shutting the rail off nightly.

Temperature Control & Display Operation

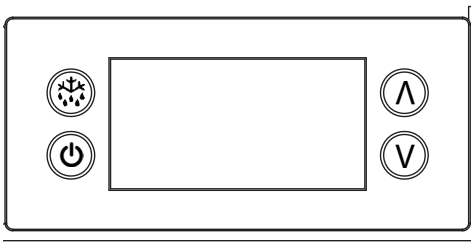

Press upper or lower right button.

- Display show actual set-point (blinking).
    - If buttons untouched for 3 seconds returns to normal.
- Increase set-point by pressing upper button. Max value depends on parameters in control.
- Decrease set-point by pressing lower button. Min value depends on parameters in control.
    - If buttons untouched for 3 seconds returns to normal and stores new set-point.

Press upper left button for 5 seconds.

- Start defrost.

Press lower left button for 5 seconds.

- Unit goes into stand-by mode.
    - The display will read Off, then a period.
- Press the lower left button again for 5 seconds.
    - The display will read On.
    - The unit will then start up in the defrost mode, and display will read dEF.

Temperature Alarm

The alarm will sound and flash HI or LO 90 minutes after the unit has reached its alarm temperature point or after any power interruption if the temperature is above or below the alarm set points. Refrigerators are factory set at mid-range to maintain about 38ºF (3ºC) box temperature. The high refrigerator temperature point is 50°F (10°C). The low refrigerator temperature point is 25°F (-4°C).

EVAPORATOR FAN OPERATION

During normal operation the evaporator fan may cycle and/or pulse independently of the compressor. Consult Technical Support at 1-844-724-CARE if you are unsure of the proper function.

Cooling Cycle		Defrost Cycle
Compressor On	**Compressor Off**	**Compressor Off**
Evap Fan On	Evap Fan Cycles On 2-Min, Off 2-Min	Evap Fan On

115Volt F15 Pressure Control

F15 display cases have a high pressure limiting device. Under severe overloading conditions, or in the event of a condenser fan failure or a plugged or blocked condenser, this device may shut down the refrigeration system. This device will automatically reset, but determining the cause of the high pressure condition should be investigated by a qualified refrigeration technician.

⚠ Caution

In attempting to adjust the pressure control, you can do damage to your unit. Please contact KitchenCare +1 (844) 724-2273 or your local service agent. Delfield is not responsible for charges incurred while having the pressure control adjusted.

Factory Recommended Settings	
Cut-in	20#
Cut-out	5#
Differential	15#

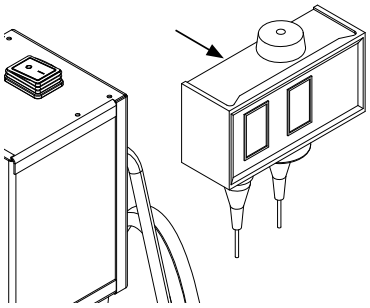

F15 Base Pressure Control

CHANGING DISPLAY FROM FAHRENHEIT TO CELSIUS ON ERC112 CONTROL

1. Simultaneously hold the up and down arrows for 5 seconds to access menu for password protected parameters.

2. Screen should temporarily flash ***PAS*** and then move to a numeric screen.

3. Scroll to ***187*** using the up/down arrows and push the stand-by button (lower left button) to enter.

4. Scroll to ***dis*** using the up/down arrows and push the stand-by button (lower left button) to enter into the display menu.

5. Scroll to ***CFu*** using the up/down arrows and push the stand-by button (lower left button) to enter the display unit menu.

6. ***-F*** should be displayed indicating Fahrenheit. Use the down arrow to change it to ***-C*** for Celsius and hit the stand-by button (lower left button) to enter the change.

7. Push the defrost button (upper left button) to move out of the display unit menu.

8. Push the defrost button (upper left button) to move out of the display menu and back to the normal display.

NOTE: For steps 7 and 8, display will return back to normal display after 30 seconds of inactivity.

230-240 Volt Export Operation

After turning the ON/OFF switch to ON the unit's compressor will begin operating. Located on the operator side at the top right is an ON/OFF switch for the display lights.

Temperature Control

Display and base temperature is controlled by separate thermostats. The display temperature control is located in the fan shroud. The F15 base thermostat is located in the mechanical compartment.

- The thermostat is set at 2.5 at the factory to provide proper operation.
- To adjust the temperature, turn the knob clockwise as indicated on the control. Settings are from 1 through 9 (9 being the coldest).
- Adjustments should be made gradually.
- Several small adjustments will be more effective than one large adjustment.
- It may take an hour or longer to realize the temperature change depending on the application and location of the unit.

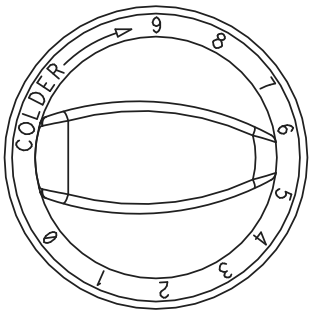

Thermostat Dial

Export 230-240 Volt Pressure Control

The export display cases have a high pressure limiting device. Under severe overloading conditions, or in the event of a condenser fan failure or a plugged or blocked condenser, this device may shut down the refrigeration system. This device will automatically reset, but determining the cause of the high pressure condition should be investigated by a qualified refrigeration technician.

⚠ Caution

In attempting to adjust the pressure control, you can do damage to your unit. Please contact KitchenCare +1 (844) 724-2273 or your local service agent. Delfield is not responsible for charges incurred while having the pressure control adjusted.

Factory Recommended Settings	
Cut-in	20#
Cut-out	5#
Differential	15#

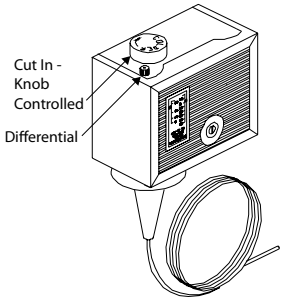

F15 Refrigerated Base Evaporator Fan Operation

When the refrigerator is initially powered up or immediately following a power outage the unit will begin cooling after a 3-6 minute delay. During normal operation the evaporator fan pulses independently of the compressor as dictated by the controller as follows:

- During the cooling mode, compressor and evaporator fan run simultaneously.
- During the compressor off mode, evaporator fan pulses three minutes on and three minutes off.
- During an actual defrost event other than the off-cycle defrost, compressor stays off but the evaporator fan runs continuously.

Cooling Cycle		Defrost Cycle
Compressor On	**Compressor Off**	**Compressor Off**
Evaporator Fan On	Evap Fan Cycles On 3-Min, Off 3-Min	Evaporator Fan On

Section 4
Maintenance

⚠ DANGER

It is the responsibility of the equipment owner to perform a Personal Protective Equipment Hazard Assessment to ensure adequate protection during maintenance procedures.

⚠ DANGER

Failure to disconnect the power at the main power supply disconnect could result in serious injury or death. The power switch DOES NOT disconnect all incoming power.

⚠ DANGER

Disconnect electric power at the main power disconnect for all equipment being serviced. Observe correct polarity of incoming line voltage. Incorrect polarity can lead to erratic operation.

⚠ Warning

When cleaning interior and exterior of unit, care should be taken to avoid the front power switch and the rear power cord. Keep water and/or cleaning solutions away from these parts.

⚠ Warning

Never use sharp objects or tools to remove ice or frost. Do not use mechanical devices or other means to accelerate the defrosting process.

⚠ Caution

Maintenance and servicing work other than cleaning as described in this manual must be done by an authorized service personnel.

General Cleaning

⚠ Warning

When using cleaning fluids or chemicals, rubber gloves and eye protection (and/or face shield) must be worn.

⚠ Caution

Never use a high-pressure water jet for cleaning or hose down or flood interior or exterior of units with water. Do not use power cleaning equipment, steel wool, scrapers or wire brushes on stainless steel or painted surfaces.

You are responsible for maintaining the equipment in accordance with the instructions in this manual. Maintenance procedures are not covered by the warranty.

Maintenance	Daily	Weekly	Monthly	After Prolonged Shutdown	At Start-Up
Interior	X			X	X
Gasket	X			X	X
Exterior	X			X	X
Drain		X		X	X
Sliding Door		X		X	X
Condenser Coil			X	X	X

Interior Cleaning

The interior can be cleaned using soap and warm water. If this isn't sufficient, try ammonia and water or a nonabrasive liquid cleaner.

GASKETS

Gaskets require regular cleaning to prevent mold and mildew build up and also to retain the elasticity of the gasket. Clean them with water and mild soap (not citrus based). Avoid full strength cleaning products on gaskets as this can cause them to become brittle and crack. Never use sharp tools or knives to scrape or clean the gasket. Gaskets can be easily replaced and do not require the use of tools or an authorized service person. The gaskets are dart style and can be pulled out of the groove in the door. Place gasket in warm water to make the material more pliable for installation. Dry and press into place.

PREVENTING BLOWER COIL CORROSION

To help prevent corrosion of the blower coil, store all acidic items, such as pickles and tomatoes, in seal-able containers. Immediately wipe up all spills.

Exterior Cleaning

Notice

Never use an acid based cleaning solution on exterior panels! Many food products have an acidic content, which can deteriorate the finish. Be sure to clean the stainless steel surfaces of ALL food products.

Clean the area around the unit as often as necessary to maintain cleanliness and efficient operation.

Wipe surfaces with a damp cloth rinsed in water to remove dust and dirt from the outside of the unit. Always rub with the "grain" of the stainless steel to avoid marring the finish. If a greasy residue persists, use a damp cloth rinsed in a mild dish soap and water solution. Wipe dry with a clean, soft cloth.

Never use steel wool or abrasive pads for cleaning. Never use chlorinated, citrus based or abrasive cleaners.

Stainless steel exterior panels have a clear coating that is stain resistant and easy to clean. Products containing abrasives will damage the coating and scratch the panels. Daily cleaning may be followed by an application of stainless steel cleaner which will eliminate water spotting and fingerprints. Early signs of stainless steel breakdown are small pits and cracks. If this has begun, clean thoroughly and start to apply stainless steel cleaners in attempt to restore the steel.

Wipe casters with a damp cloth to prevent corrosion.

DRAIN

Each refrigerated unit has a drain located inside the unit that removes the condensation from the evaporator coil and routes it to an external condensate evaporator pan. Each drain can become loose or disconnected during normal use. If you notice water accumulation on the inside of the unit, be sure the drain tube is connected to the evaporator drain pan. If water is collecting underneath the unit, make sure the end of the drain tube is in the condensate evaporator. The leveling of the unit is important as the units are designed to drain properly when level. Be sure all drain lines are free of obstructions.

Cleaning The Condenser Coil

In order to maintain proper refrigeration performance, the condenser fins must be cleaned of dust, dirt and grease regularly. It is recommended that this be done monthly. If conditions are such that the condenser is totally blocked in a month, the frequency of cleaning should be increased. Clean the condenser with a vacuum cleaner or stiff brush. If extremely dirty, a commercially available condenser cleaner may be required.

Failure to maintain a clean condenser coil can initially cause high temperatures and excessive run times. Continuous operation with a dirty or clogged condenser coil can result in compressor failure. Neglecting the condenser coil cleaning procedures will void any warranties associated with the compressor and cost to replace the compressor.

Cleaning The Condensate Evaporator

REMOTE MODELS ONLY

The stainless steel condensate evaporator pan should be cleaned every six months. Use a vacuum cleaner or damp cloth to remove dust that may have accumulated. This will prevent corrosion of the stainless steel.

Door Maintenance

DOORS WITH HINGES

Over time and with heavy-use doors, the hinges may become loose. If this happens, tighten the screws that mount the hinge brackets to the frame of the unit. Loose or sagging doors can cause the hinges to pull out of the frame, which may damage both the doors and the hinges. In some cases this may require qualified service agents or maintenance personnel to perform repairs.

SLIDING DOORS

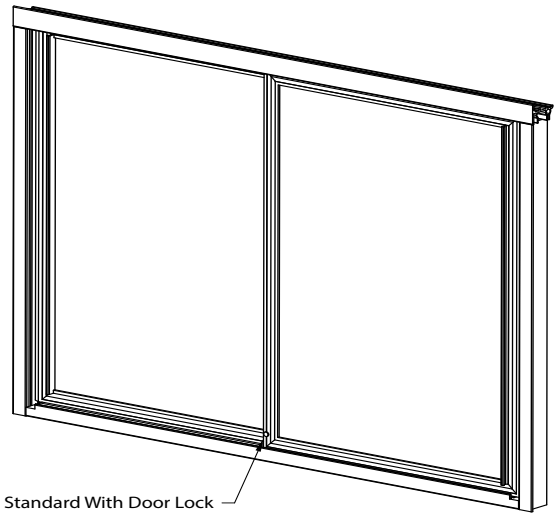

Clean the tracks weekly with a mild soap and water solution to keep the tracks free of foreign matter. The glass may be cleaned with one of the many commercial glass cleaners available.

Sliding Door Removal

If it becomes necessary to replace a sliding door assembly or a glass panel, have your unit's model and serial numbers available when you call KitchenCare (844) 724-2273. Indicate that your unit has the sliding door assembly when you call.

1. Open the door almost completely.
2. Firmly grasp both sides of the door.
3. Lift the door up and move it until it enters a notch and can be lifted higher.
4. Tilt the bottom out without removing the top.
5. Use the top to gently return the spring to the closed position.
6. Remove the door from the top track.

Sliding Door Reinstall

1. Use the top inside corner of the door to move the spring to the open position.
2. Put the top into the track and find the notch where the door can be lifted higher.
3. Set bottom of the door into the track.

DELFIELD
980 SOUTH ISABELLA ROAD, MOUNT PLEASANT, MI 48858

800-733-8821
WWW.DELFIELD.COM

WELBILT®
Bringing innovation to the table

WWW.WELBILT.COM

Welbilt provides the world's top chefs, and premier chain operators or growing independents with industry leading equipment and solutions. Our cutting-edge designs and lean manufacturing tactics are powered by deep knowledge, operator insights, and culinary expertise. All of our products are backed by KitchenCare® – our aftermarket, repair, and parts service.

- CLEVELAND
- CONVOTHERM®
- DELFIELD®
- FITKITCHEN™
- FRYMASTER®
- GARLAND
- KOLPAK®
- LINCOLN
- MANITOWOC®
- MERCO®
- MERRYCHEF®
- MULTIPLEX®

©2017 Welbilt Inc. except where explicitly stated otherwise. All rights reserved. Continuing product improvement may necessitate change of specifications without notice.
Part Number: 9291460 11/17