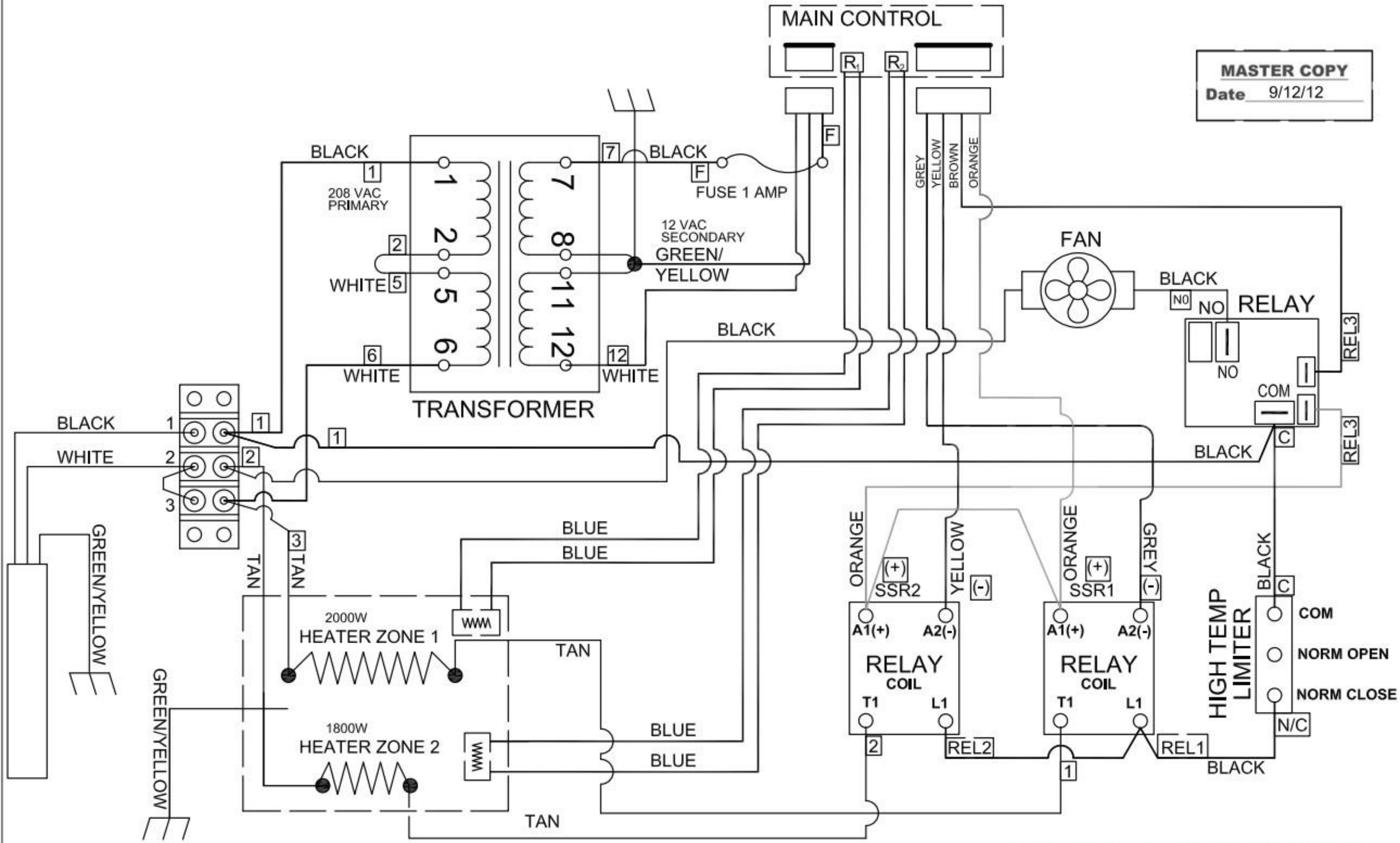

WD BC2325 30030 043012.DWG