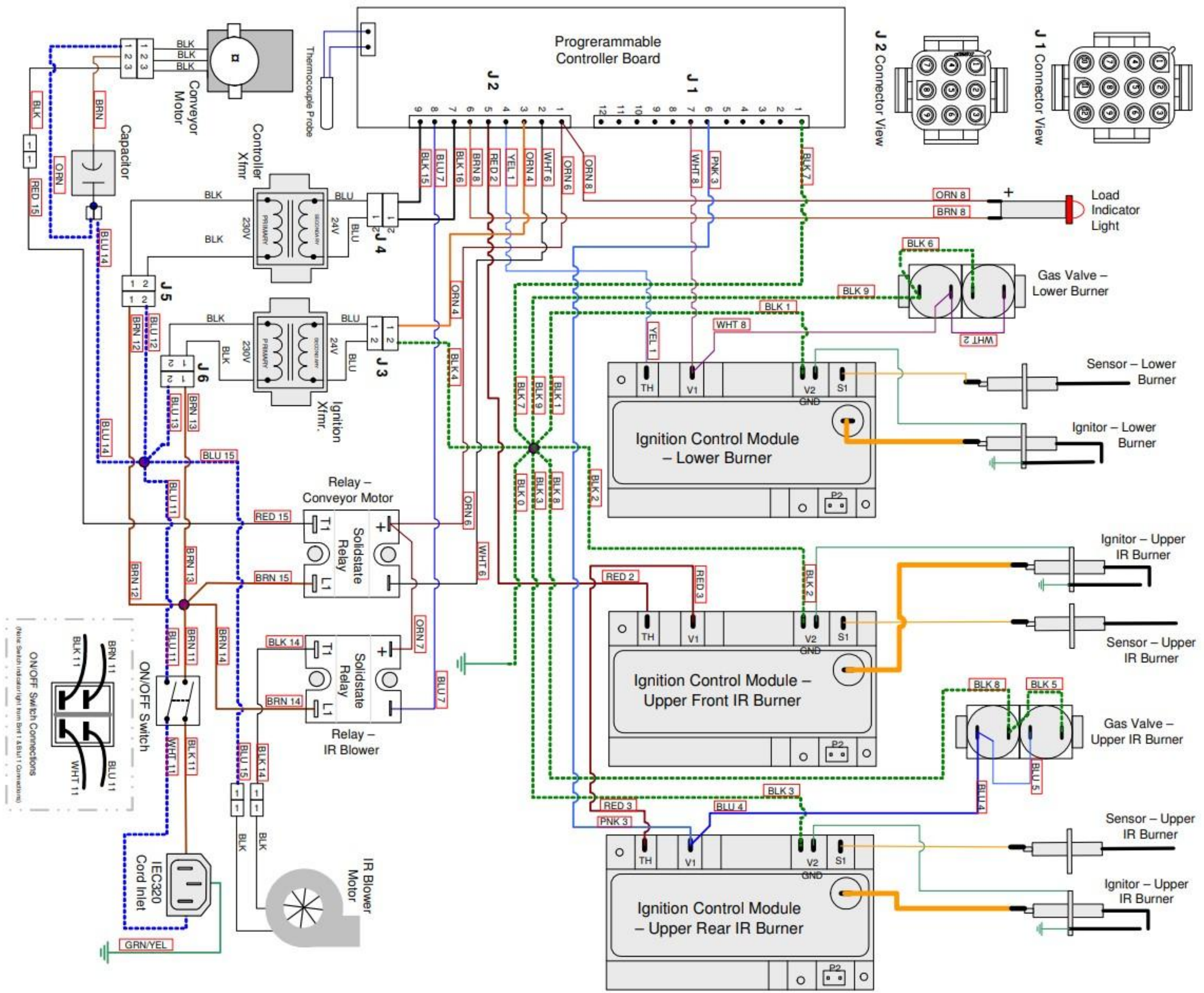
Progrerammable Controller Board
J 2
J 1
J 2 Connector View
J 1 Connector View
Thermocouple Probe
Conveyor Motor
Capacitor
Controller Xfmr
Ignition Xfmr.
J 4
J 5
J 6
J 3
Load Indicator Light
Gas Valve – Lower Burner
Sensor – Lower Burner
Ignitor – Lower Burner
Ignition Control Module – Lower Burner
Relay – Conveyor Motor
Solidstate Relay
Relay – IR Blower
Ignitor – Upper IR Burner
Sensor – Upper IR Burner
Ignition Control Module – Upper Front IR Burner
Gas Valve – Upper IR Burner
Sensor – Upper IR Burner
Ignitor – Upper IR Burner
Ignition Control Module – Upper Rear IR Burner
ON/OFF Switch
ON/OFF Switch Connections
IEC320 Cord Inlet
IR Blower Motor
GRN/YEL