Illustrated Parts List

Your Solutions Partner

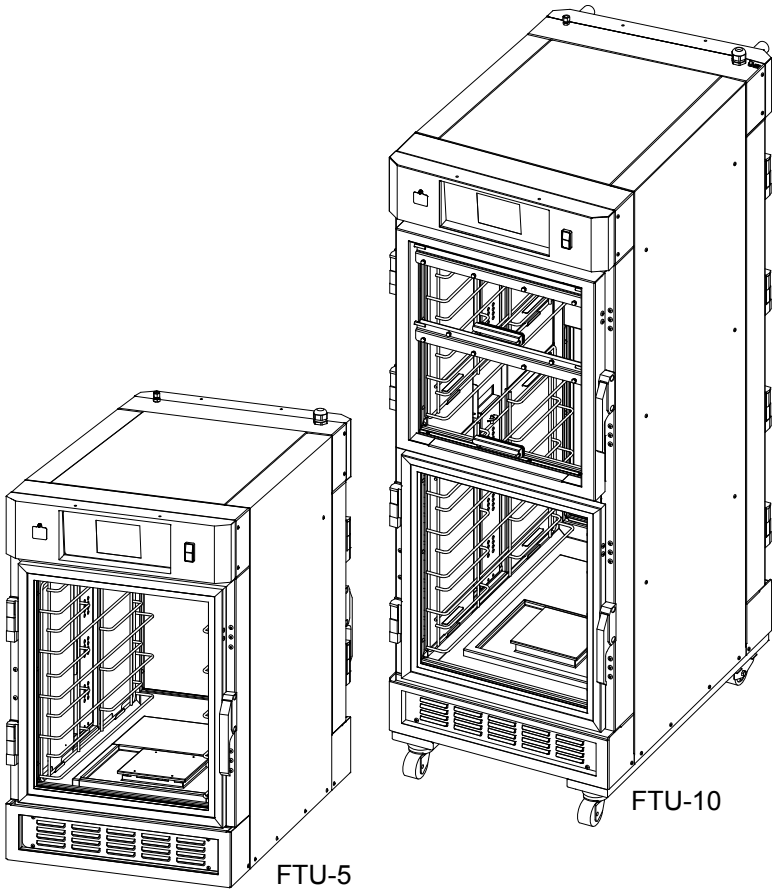

FLEXTECH HUMIDIFIED HOLDING CABINET (FTU)

MODELS

FTU-5
FTU-5S (STACKED)
FTU-10

This manual is Copyright © 2017 Duke Manufacturing Co. All rights reserved. Reproduction without written permission is prohibited. Duke is a registered trademark of the Duke Manufacturing Co.

Duke Manufacturing Co.

2305 N. Broadway • St. Louis, MO 63102
800.735.3853 • 314.231.1130
Fax: 314-231-5074
www.dukemfg.com

TABLE OF CONTENTS

FTU-5 UNIT PANELS AND DOORS 4
FTU-5 CONTROLLER PANEL 6
FTU-5 CONTROL AND REAR PANEL ASSEMBLIES 7
FTU-5 CONTROL PANEL COMPONENTS 8
FTU-5 INTERIOR CABINET AND BASE 9
FTU-5 BASE ASSEMBLY 10
FTU-5 WATER SUPPLY ASSEMBLY COMPONENTS 12
FTU-5 HUMIDIFICATION AND FAN ASSEMBLY 14
FTU-5 INSULATION 16
FTU-5 HEATING COMPONENTS 17
FTU-5 SINGLE CORD REAR ADAPTER ASSEMBLY 18
FTU-5 DUAL CORDS REAT ADAPTER ASSEMBLY 19

FTU-5 & FTU-10 UNIT DOORS 20
FTU-5 & FTU-10 HARNESSES 22

FTU-10 UNIT PANELS AND DOORS 24
FTU-10 CONTROL PANEL 26
FTU-10 REAR PANEL ASSEMBLIES 28
FTU-10 INSULATION 30
FTU-10 INTERIOR CABINET AND BASE 31
FTU-10 BASE ASSEMBLY 32
FTU-10 HUMIDIFICATION AND FAN ASSEMBLY 34
FTU-10 HEATING COMPARTMENT 36
FTU-10 WATER SUPPLY ASSEMBLY COMPONENTS 37

How to Determine Manufacture Date from Duke Equipment Serial Numbers

All units currently manufactured in St. Louis and Sedalia, Missouri (After 2/1/2013):

08 03 0202

Month Manufactured

Year Manufactured

Sequential Number

(Example: 08030202 = Indicates the unit was manufactured in August of 2003)

Units Manufactured in St. Louis, Missouri (Before 2/1/2013):

30 IF AA 0123

Unit Identification

10	=	5/9
20	=	6/13 & E-Series
30	=	6/18 & 3/9
90	=	FBB
94	=	FWM
95	=	IRHU
99	=	Dry Channel

Year of Manufacture

A	=	1
B	=	2
C	=	3
D	=	4
E	=	5
F	=	6
G	=	7
H	=	8
I	=	9
J	=	0

(Examples)
(JJ = 2000)
(JA = 2001)
(JB = 2002)

Sequential Number

Month of Manufacture

JA	=	January
JB	=	February
JC	=	March
JD	=	April
JE	=	May
JF	=	June
JG	=	July
JH	=	August
JI	=	September
AJ	=	October
AA	=	November
AB	=	December

FTU-5 UNIT PANELS AND DOORS

ITEM	PART NUMBER	DESCRIPTION	QTY
1	169388	PANEL, TOP, PAINTED	1
	169389	PANEL, TOP, STACKED PAINTED	
2	279500	SCREW, PH TR HD SS, 8-32 X 1/2"	49
3	169390	PANEL, SIDE, PAINTED	2
4	513032	SCREW-8-18 x 1/2" SS TEK	36
5	169637	FTU, GASKET, DOOR	2
6	169685	SCREW, #10-24 x 1/2" PH FL W/NYLON PATCH	12
7	169047	ASSY, SOLID DOOR LEFT HINGE	2
	169048	ASSY, SOLID DOOR RIGHT HINGE	
	169056	ASSY, GLASS DOOR, LEFT HINGE	
	169058	ASSY, GLASS DOOR RIGHT HINGE	
	169070	ASSY, FLIP DOWN DOOR, LEFT HINGE	
	169071	ASSY, FLIP DOWN DOOR, RIGHT HINGE	
8	169394	RETAINER, DOOR GASKET, HORIZ.	4
9	169395	RETAINER, DOOR GASKET, VERT.	4
10	169675	HINGE, DOOR, FTU	A/R
11	169668	LATCH, FTU DOOR	A/R
12	169053	WELDMENT, SOLID DOOR, FTU	A/R
13	169636	FTU, DOOR, GLASS, DUAL PANE	A/R
14	512938	SCREW, #10-24 × 1 FL PH SS W/NYTEMP PATCH	A/R
15	407064	SCREW, 10-24 × 3/8" TRUSS HD, SS	A/R
16	10280400	SCREW, 10-24 × 3/8" TR PH SS	A/R
17	169093	ASSY, FD, FRAME DOOR & CHANNEL	A/R
NS	297000	SEALANT, SILICONE, ALUMINUM, NSF	A/R
NS	169712	SCREW, #10-24 × .25IN TR PH MACHINE	A/R
NS	71350	LOCKING COUMPOND, 242 THREAD LOCKER	A/R

Table: PL-1 FTU-5 Unit Panels and Doors

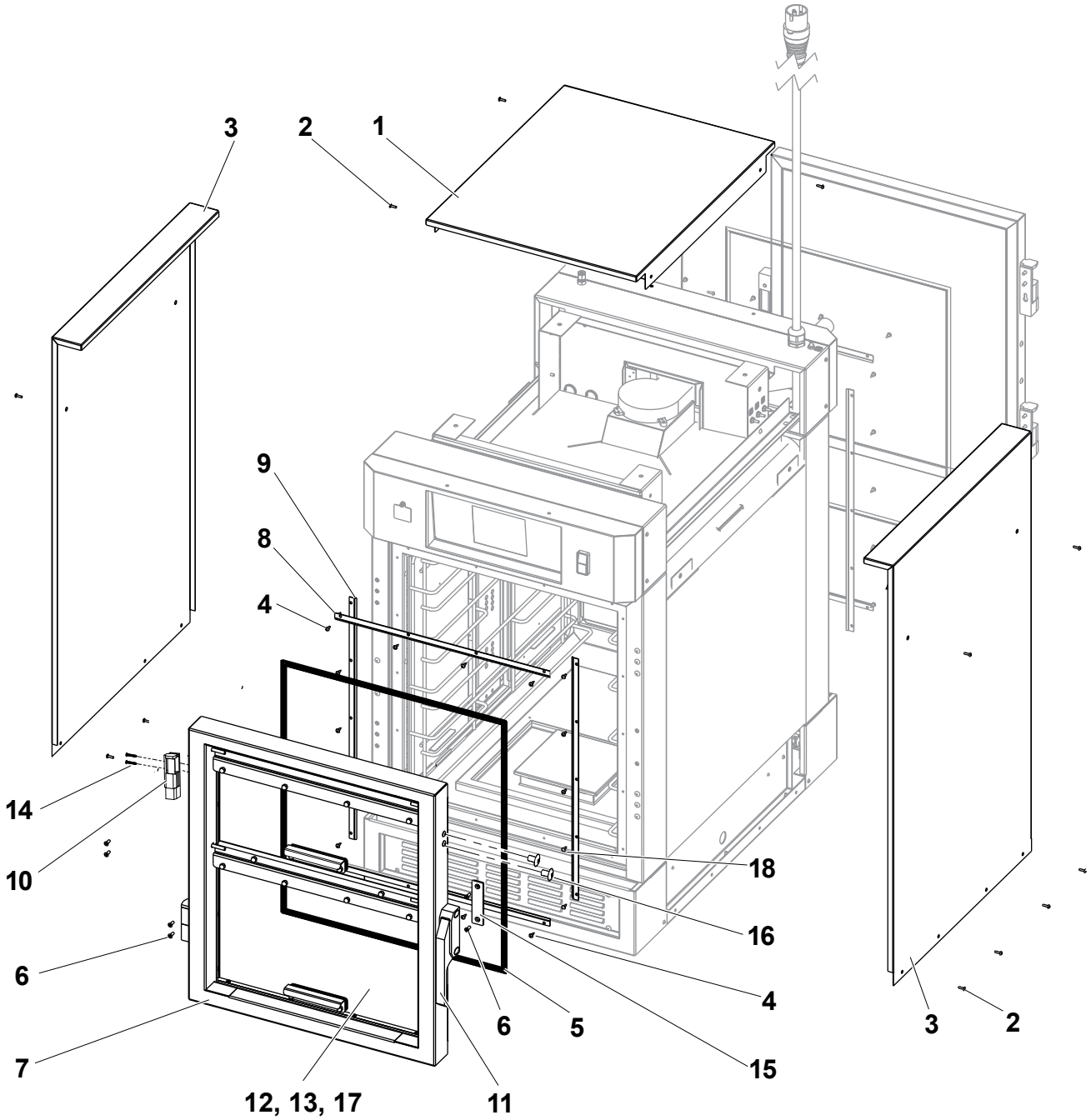

Figure: PL-1 FTU-5 Unit Panels and Doors

FTU-5 CONTROLLER PANEL

ITEM	PART NUMBER	DESCRIPTION	QTY
1	120007	CONNECTOR, USB PANEL MOUNT	1
2	ELC0017-2	PCB, TSC, FTU	1
3	513158	NUT, 8-32, SERRATED FLANGE	4
4	169028	WELDMENT, CONTROL PANEL (*155625 Nutserts must be Factory Installed*)	1
5	169629	SWITCH, SEALED CARLING	1
6	169680	OVERLAY, CONTROL, FTU	1
7	168158	PLATE, DATA KEY COVER - DSO	1
8	168500	SCREW, 8-32 x 3/16 x 3/16 D. SHDR	1
9	168160	WASHER, .195 ID x .354 OD x .032 THK SS	2
10	156840	LABEL, ELECTRICAL DANGER	1

Table: PL-2 FTU-5 Controller Panel

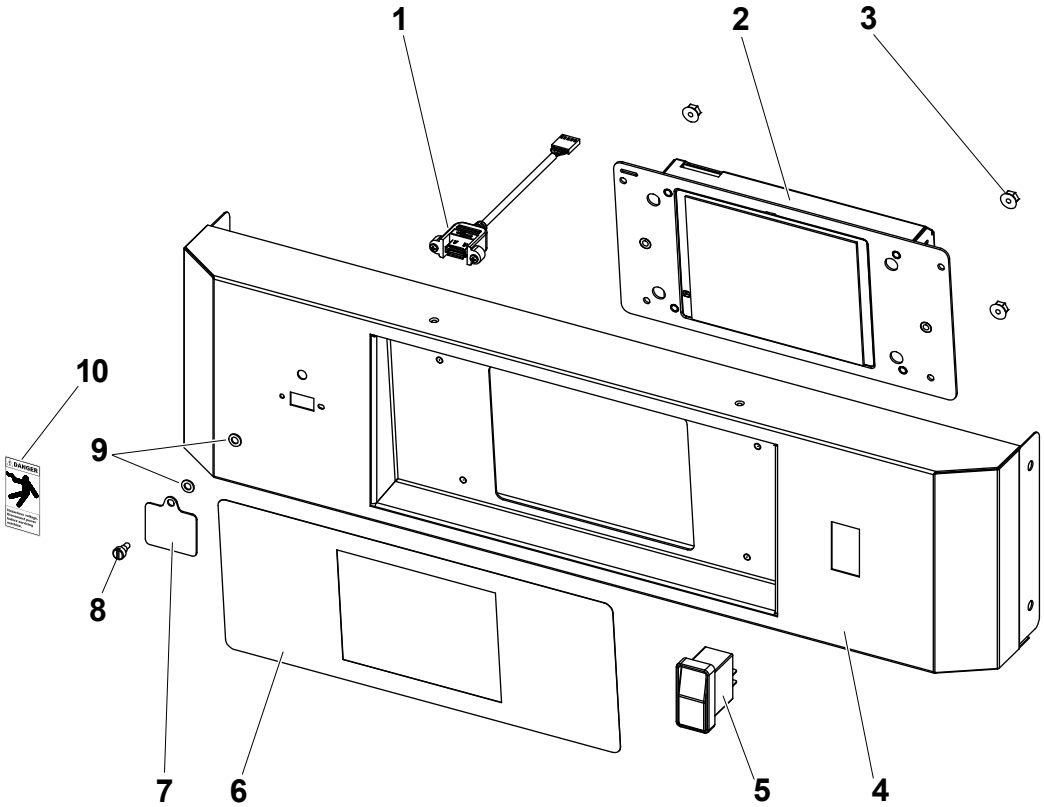

Figure: PL-2 FTU-5 Controller Panel

FTU-5 CONTROL AND REAR PANEL ASSEMBLIES

ITEM	PART NUMBER	DESCRIPTION	QTY
1	169027	ASSEMBLY, CONTROL PANEL	1
2	169045	ASSEMBLY, FRONT ADAPTER	1
3	297000	SILICONE SEALANT, ALUM. COLOR	1
4	10280400	SCREW, 10-24 x 3/8" TR PH SS	19
5	279500	SCREW, PH TR HD SS,8-32 X 1/2"	51
6	169670	FTU, BLOWER, VENT	1
7	168378	SCREW, 8-32 X .375 PN PH S/S	11
8	169044	ASSEMBLY, PANEL, REAR, TOP	1
9	169026	ASSEMBLY, AXIAL FAN	1
10	169370	BRACKET, MTG COOLING FAN (*155625 Nutserts must be Factory Installed*)	1
11	169398	WATER GUARD, TOP, FTU	1
12	155625	NUTSERT, #8-32	2
13	169667	FAN	1
14	10280400	SCREWS	4
15	169760	STANDOFF, RUBBER	2
16	159101	SCREW, 8-32 × 1-1/2 PN PH SS	2

Table: PL-3 FTU-5 Control and Rear Panel Assemblies

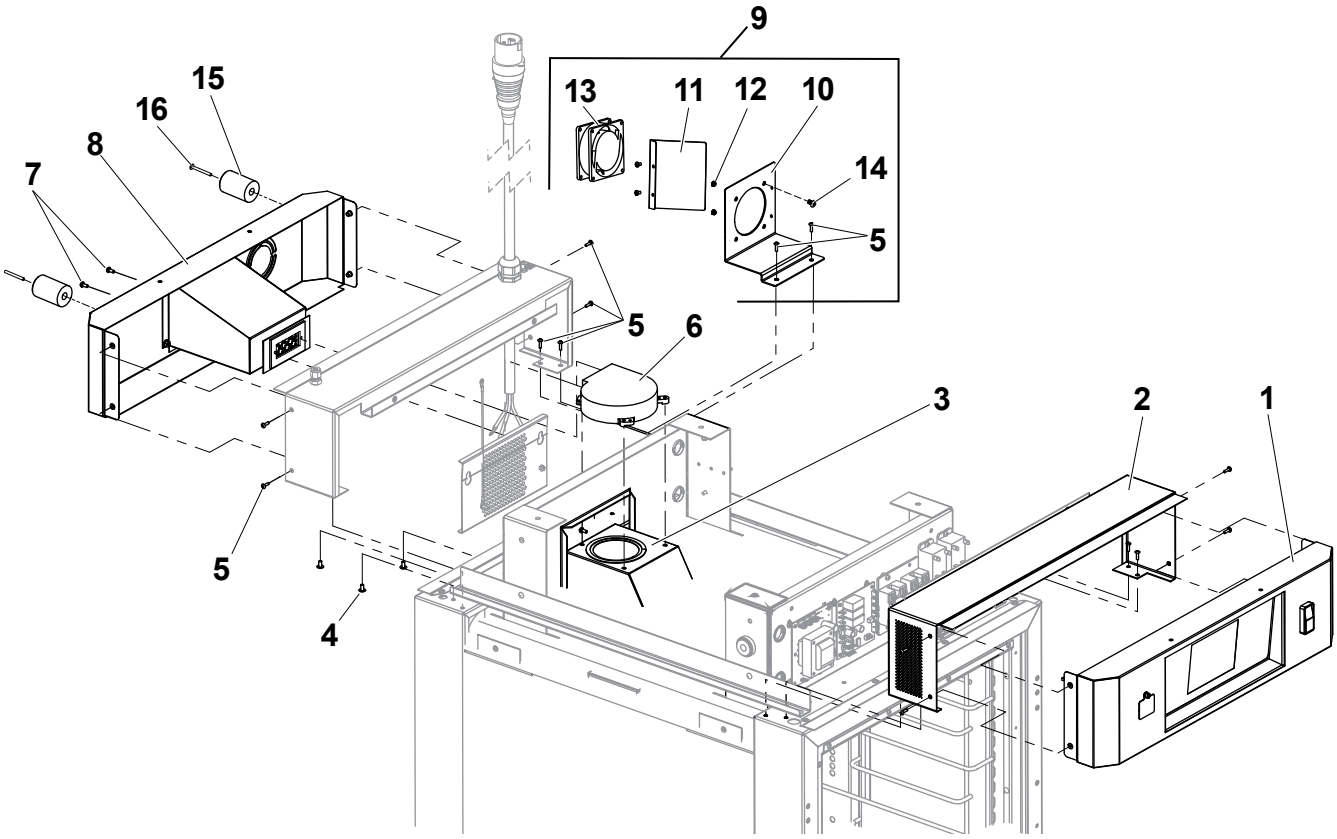

Figure: PL-3 FTU-5 Control and Rear Panel Assemblies

FTU-5 CONTROL PANEL COMPONENTS

ITEM	PART NUMBER	DESCRIPTION	QTY.
1	169614	SPACER, ALUM., .375OD, .166ID, .250 LG	2
2	225427	RELAY GEN PURPOSE DPST	2
3	168378	SCREW, 8-32 x .375 PN PH S/S	11
4	120103	FUSE, MOD CONTROL, TSC	2
5	160814	SCREW, 10-24 x 1-1/4" TR PH SS	2
6	120102	FUSE HOLDER, MOD CONTROL	1
7	168128	SCREW, 8-32 x 5/8" PN PH SS	2
8	175765	TRANSFORMER, 240V	1
9	169029	ASSEMBLY, SSRs (Includes ITEM'S 10, 11 AND 12)	1
10	169397	PLATE, HEAT SINK	1
11	120005	SSR, 25A 3-32VDC TRIGGER	2
12	279500	SCREW, PH TR HD SS,8-32 × 1/2"	4
13	169773	PCB, IO, TSC-6/18M	1
14	120011	PCB, 12V PWR 208/230V	1
15	120501	FUSE, 3.15 AMP 5 x 20 MILLIMETER (REF. 120011)	1
16	512766	BUZZER, ULTRA LOUD CONTINUOUS TONE	1

Table: PL-4 FTU-5 Control Panel Components

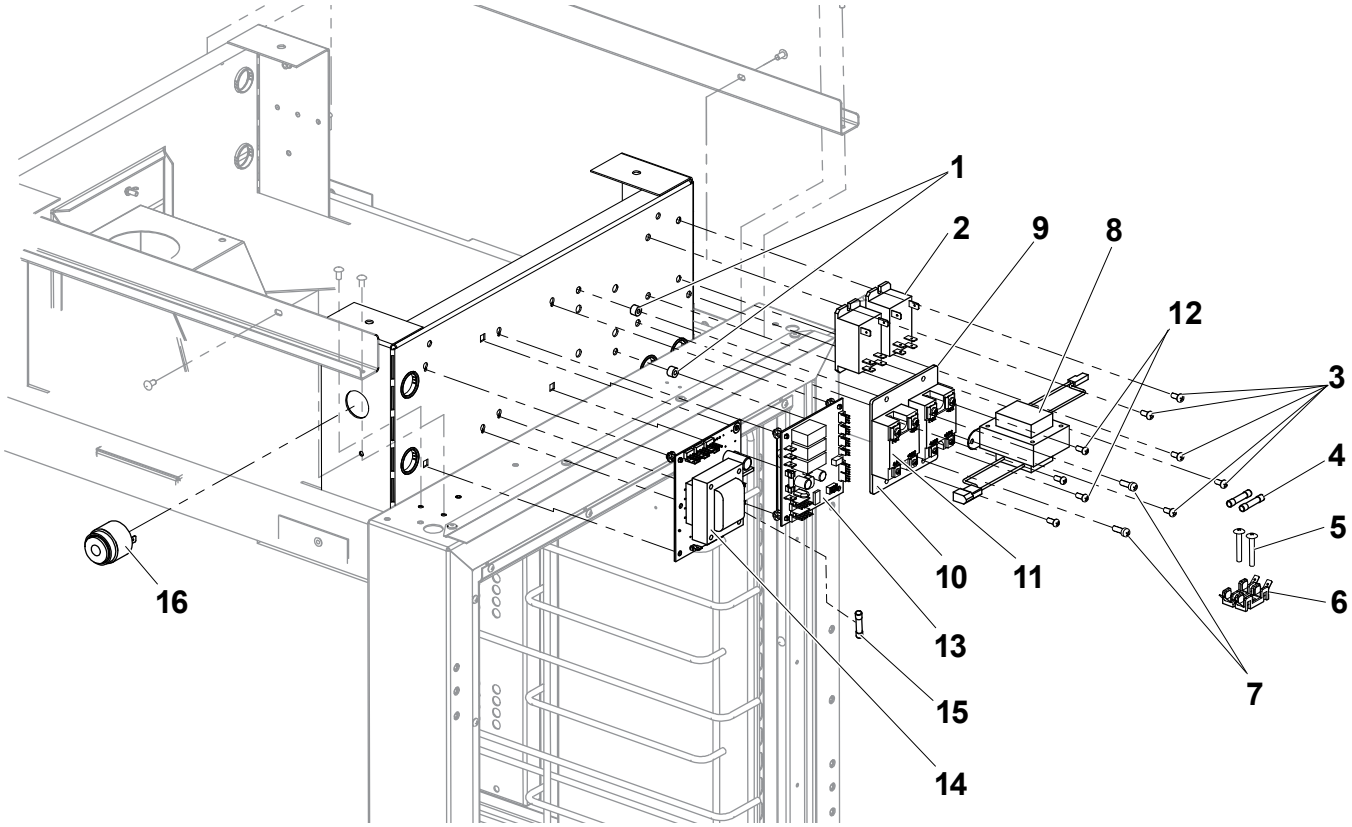

Figure: PL-4 FTU-5 Control Panel Components

FTU-5 INTERIOR CABINET AND BASE

ITEM	PART NUMBER	DESCRIPTION	QTY.
1	169759	RACK, WIRE FTU	2
2	169191	WELDMENT, HANDLE PNL INNER SIDE	4
3	169192	ASY, DUCT, FTU CMN VENT INTERNAL	2
4	169136	ASY, COVER, FTU DUCT REAR	1
5	154219	NUT, 6-32, HEX KEPS	5
6	169343	PLATE, OUTLET	1
7	279500	SCREW, PH TR HD SS,8-32 X 1/2"	49
8	169187	WLDMNT, FRT BASE COVER, FTU	1
9	169679	VENEER, HI LIMIT	1
10	169676	INSULATION, LOWER, REAR	1
11	169042	ASY, INSULATION SUPPORT, LEFT	1
12	169043	ASY, INSULATION SUPPORT, RIGHT	1
13	169506	SUPPORT, FTU INSULATION CTR	1
14	153657	BUSHING, SPLIT, 1.375 HOLE	1
15	10280400	SCREW,10-24 x 3/8" TR PH SS	21
16	169188	WELDMENT, REAR BASE COVER, FTU	1
17	169119	ASSY, WALL MOUNTING HARDWARE	1
18	512835	CASTER, 2-1/2" SWIVEL W/LO	2
19	512836	CASTER, 2-1/2" SWIVEL	2
20	983305	SCREW, 5/16-18 × 3/4" HX CP ZP	16

Table: PL-5 FTU-5 Interior Cabinet and Base

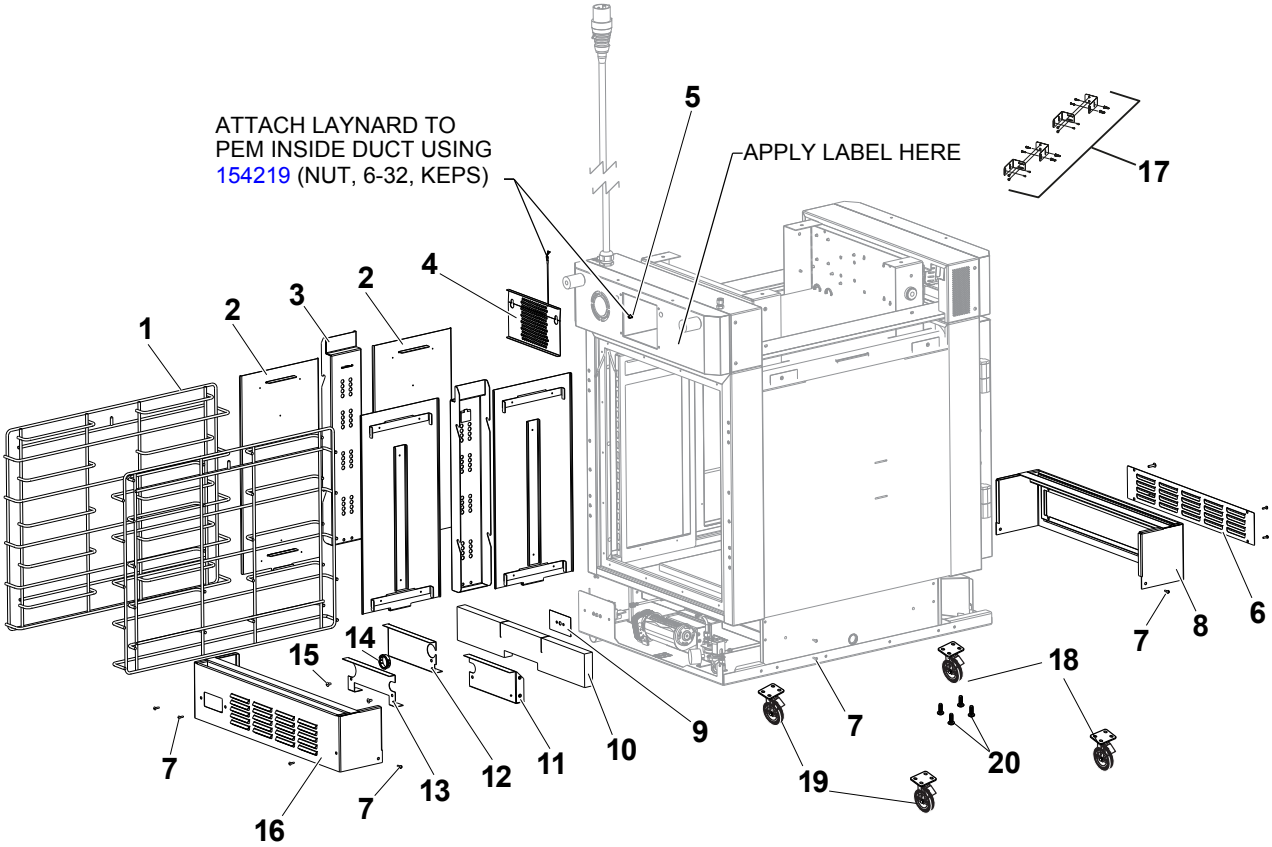

Figure: PL-5 FTU-5 Interior Cabinet and Base

FTU-5 BASE ASSEMBLY

ITEM	PART NUMBER	DESCRIPTION	QTY.
1	169016	WELDMENT, DUCT MACHINE COMPT	1
2	169015	ASSY, INLET DUCT	1
3	169604	GROMMET, SILICONE .875	3
4	169337	PAN, INSULATION	2
5	169656	INSULATION, COOLING DUCT	2
6	168429	BLOWER, SIDE TANGENTIAL 208-230VAC 105CFM	1
7	513158	NUT, 8-32 SHLDR SERRETED Z ZINC	9
8	169784	SCREW, 6 × 3/8" PN PH SM SS	4
9	169655	INSULATION, BASE	2
10	156954	LABEL, GROUND SYMBOL	1
11	169030	ASSY, BRKT INTERLOCK SWITCH SP	1
12	168303	SWITCH, PRIMARY & SECONDARY	1
13	169612	LOCKNUT, 8-32 SERRATED FLANGE HEX HEAD	2
14	169117	WELDMENT, OUTLET TRANSITION DUCT	1
15	169040	ASSY, SPILLAGE PAN	1
16	279500	SCREW, 8-32 × 1/2" PTHMS 18-8SS	2
17	156840	LABEL,1CAUTION ELECT'L HAZARD	2
18	169013	ASSY, BASE NON-STACKING	1
	169038	ASSY, BASE STACKING LOWER UNIT	1
	169039	ASSY, BASE STACKING UPPER UNIT	1
19	175514	BUSHING, HEYCO SHORTY 1”	1

Table: PL-6 FTU-5 Base Assembly

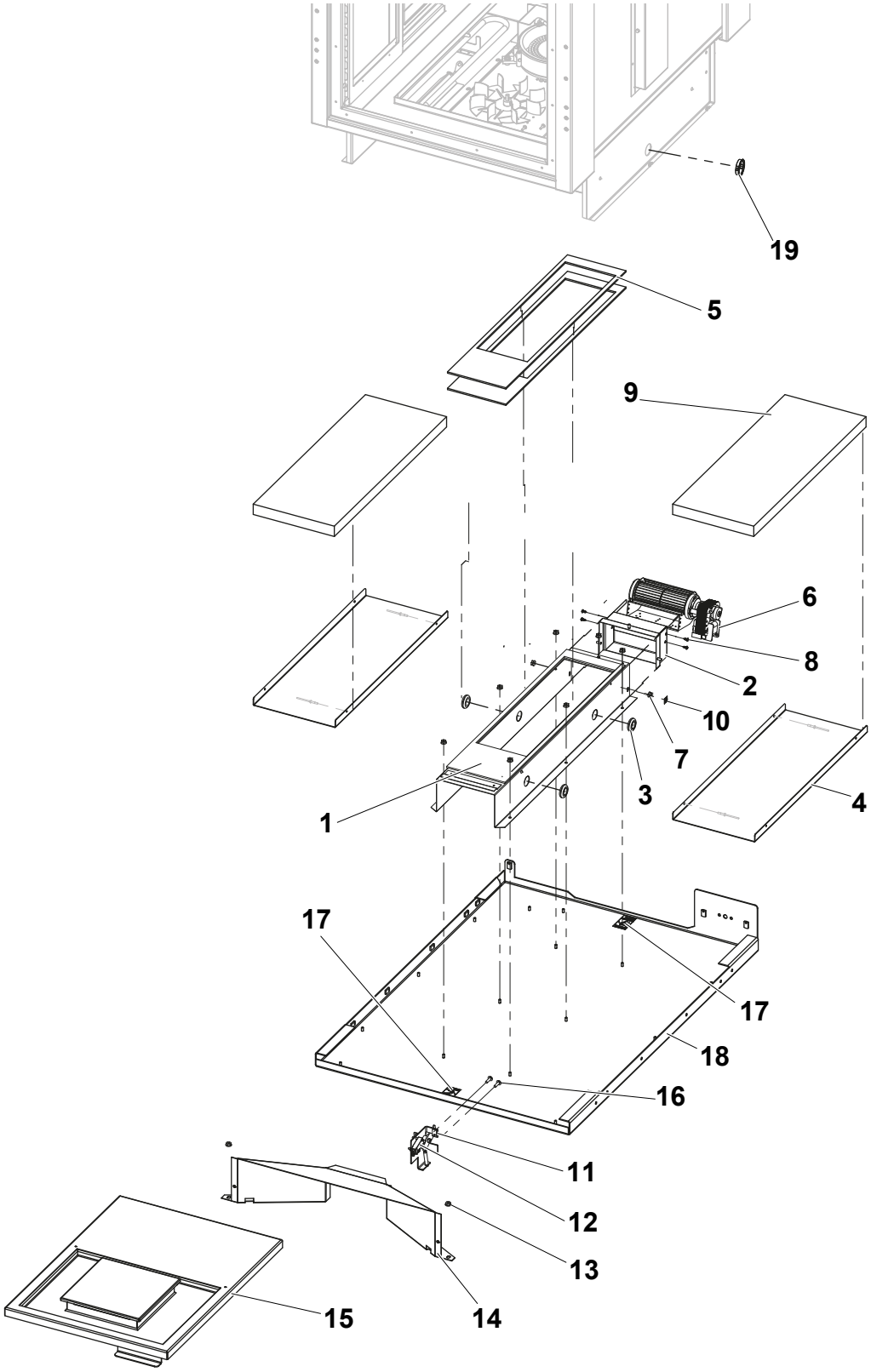

Figure: PL-6 FTU-5 Base Assembly

FTU-5 WATER SUPPLY ASSEMBLY COMPONENTS

ITEM	PART NUMBER	DESCRIPTION	QTY.
1	169025	ASY, WATER SUPPLY COMPONENTS	1
2	169606	VALVE, SOLENOID DEMA P442	1
3	169678	FITTING, PIPE 1/4” NPT BRASS HEX NIPPLE	1
4	169602	ORIFACE, FLOW RESTRICTOR #35 1/4” NPT MALE	1
5	169301	ANGLE, REGULATOR	1
6	169605	REGULATOR, WITH GAUGE 1/4” NPT FEMALE	1
7	169055	ASY, REG BRACKET WATER SUPPLY	1
8	169611	FITTING, BRASS YOR-LOK ADAPTER 1/4 TUBE × 1/4 NPT MALE	1
9	168378	SCREW, 8-32 × 3/8”PN PH SS	2
10	169633	FITTING, BRASS YOR-LOK 90 DEGREE ELBOW 1/4 TUBE × 1/4 NPT MALE	1
11	169618	ELBOW, .250 NPT 90 DEGREE	1
12	169619	FITTING, 1/4"TUBE OD	1
13	169682	TUBE, COPPER LOWER	1
14	169683	TUBE, COPPER TOP	1
15	169684	TUBE, COPPER JUMPER	1
16	169686	TUBE, WATER SUPPLY STAND ALONE UNIT	1
Not Shown	338475	TAPE, 1/2" X 520" TEFLON	A/R

Table: PL-7 FTU-5 Water Supply Assembly Components

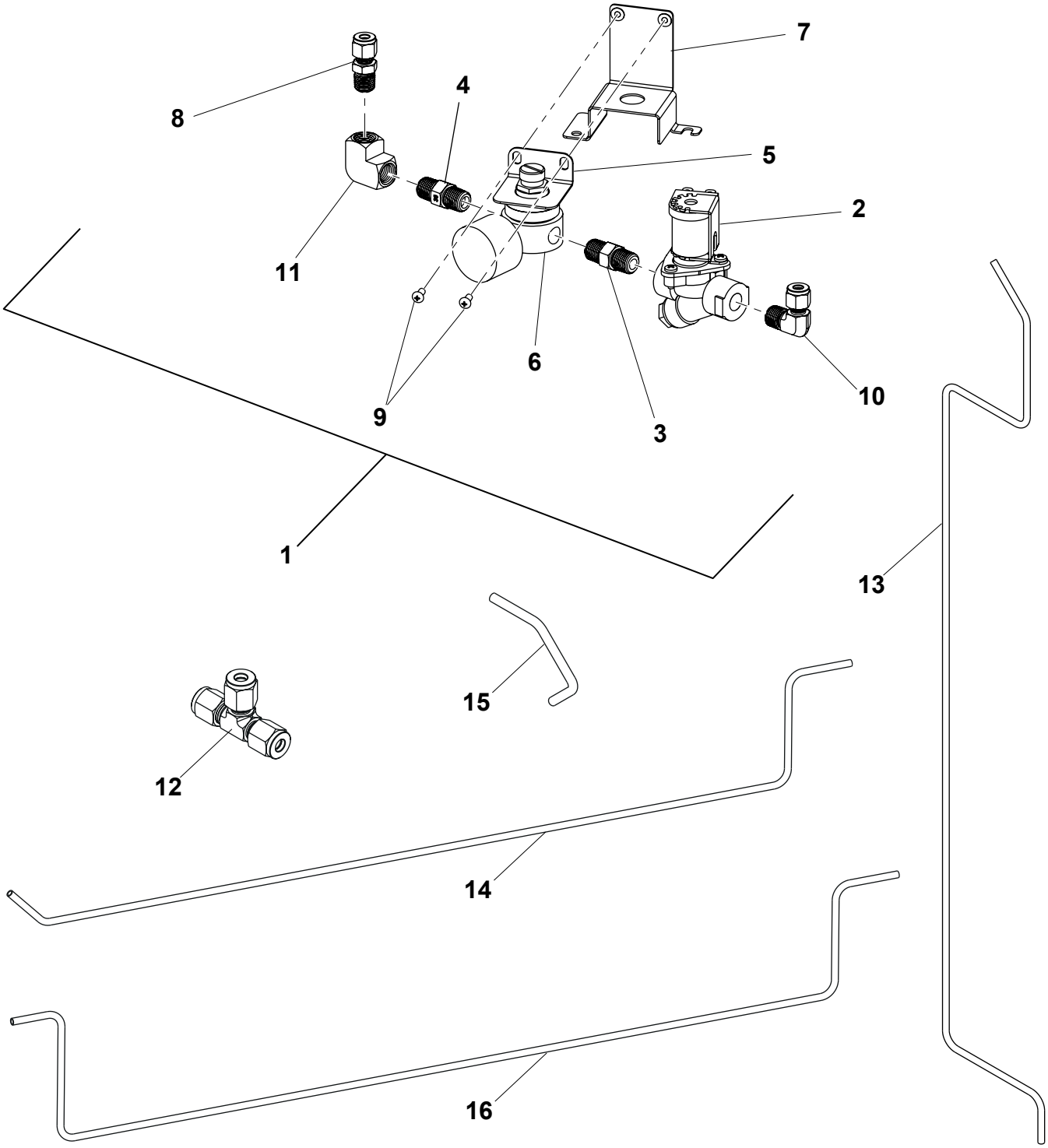

Figure: PL-7 FTU-5 Water Supply Assembly Components

FTU-5 HUMIDIFICATION AND FAN ASSEMBLY

ITEM	PART NUMBER	DESCRIPTION	QTY.
1	169017	ASSY, HUMIDIFICATION AND FAN	1
2	169020	WELDMENT, PAN HUMIDITY & FAN	1
3	512778	MOTOR, SEALED PROOFER 50/60HZ CE	1
4	154019	BLOWER WHEEL	1
5	169657	SCREW, SET 1/4-28 SS	1
6	169604	GROMMET, SILICONE .875	1
7	169018	ASSY, BLOCK HUMIDITY (Includes Part Nos. 512566, 169691, 169019 & 169689 or 169690)	1
8	169019	WELDMENT, BLOCK HUMIDITY GEN.	1
9	169691	THERMOSTAT, SNAP DISC 400F	1
10	512566	SCREW #4-40 × 1/4” PN PH SS	2
11	169022	ASSY, BEARING SUPPORT	1
12	169614	SPACER, ALUM. .375OD X .166ID X .250LG	7
13	169612	LOCKNUT, 8-32 SERRATED FLANGE HEX HEAD	9
14	169607	DISC, ATOMIZING 5” W/PERF.	1
15	169603	COLLAR, SHAFT SET SCREW 5/16”	2
16	512777	RTD, PROOFER/OVEN 50/BOX	1
17	154219	NUT, KEPS 6-32 HEX ZP	2
18	169658	INSULATION, HUMIDITY MOTOR	2
19	169610	FITTING, BULKHEAD 1/4” OD TUBING	1
20	169659	TUBE, WATER AT CYLINDER	1
21	169660	CLAMP, LOOP STAINLESS STEEL	1
22	279050	SCREW, 8-32 × 1/4” TR SL SS MACHINE	1
23	385350	WASHER, 10 SS FLAT AN960CIOL	1
24	169023	WELDMENT, MOTOR INSUL. SUPPORT	1
25	169794	GASKET, FTU, HUMID. BOTTOM	1
	169795	GASKET, FTU HUMID. VERTICAL	1
26	10280400	SCREW, 10-24 × 3/8” TR PH SS MACHINE	9
27	169375	COVER, HIGH LIMIT	1
28	169665	TUBING, REGULATOR TO HUMID.SYS.	1
29	169689	HEATER, ASSY 208V W/TERMINATION	1
	169690	HEATER, ASSY 240V W/TERMINATION	1
30	169130	ASSY, MOTOR HUMID SLINGER 208V	1
	169131	ASY, MOTOR HUMID SLINGER 230V	1
Not Shown	512906	RTV, RED-HIGH TEMP NSF FDA,USDA, UL-10.1 CARTRIDG	1

Table: PL-8 FTU-5 Humidification and Fan Assembly

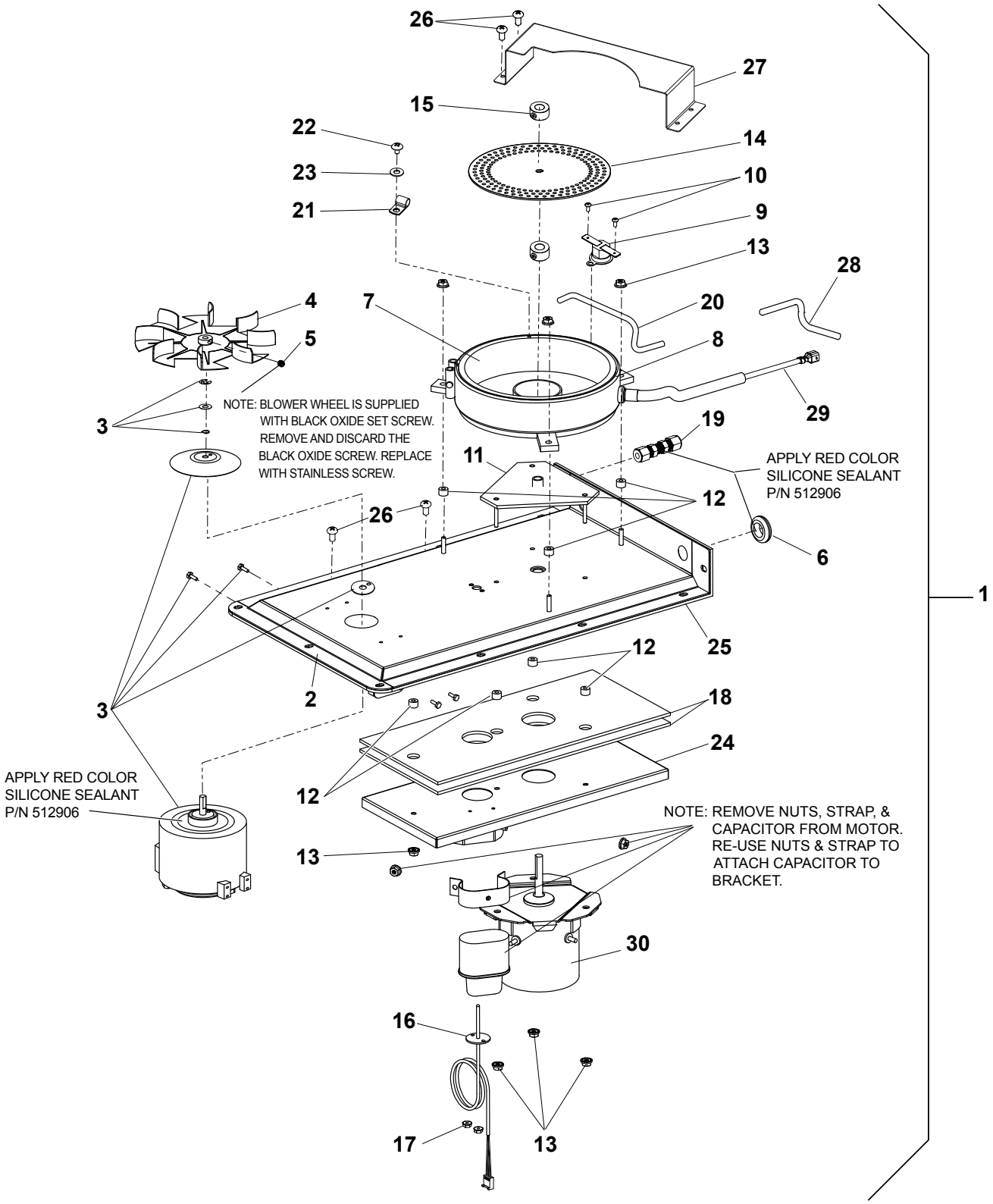

Figure: PL-8 FTU-5 Humidification and Fan Assembly

FTU-5 INSULATION

ITEM	PART NUMBER	DESCRIPTION	QTY.
1	169662	INSULATION, TOP, FTU	1
2	169693	INSULATION, FRAME, FTU	2
3	169663	INSULATION, BOTTOM, FTU	1
4	169688	INSULATION, BOTTOM, W/ FAN CUTOUT, FTU	1
5	169669	RH SENSOR	1
6	169393	CLIP, RH SENSOR	1
7	154219	NUT, 6-32, HEX KEPS	5
8	169627	RTD, 1M, 100 OHM	1
9	169034	ASY, BRKT, RTD & RH SENSOR	1
10	297000	SILICONE SEALANT, ALUM. COLOR	1

Table: PL-9 FTU-5 Insulaton

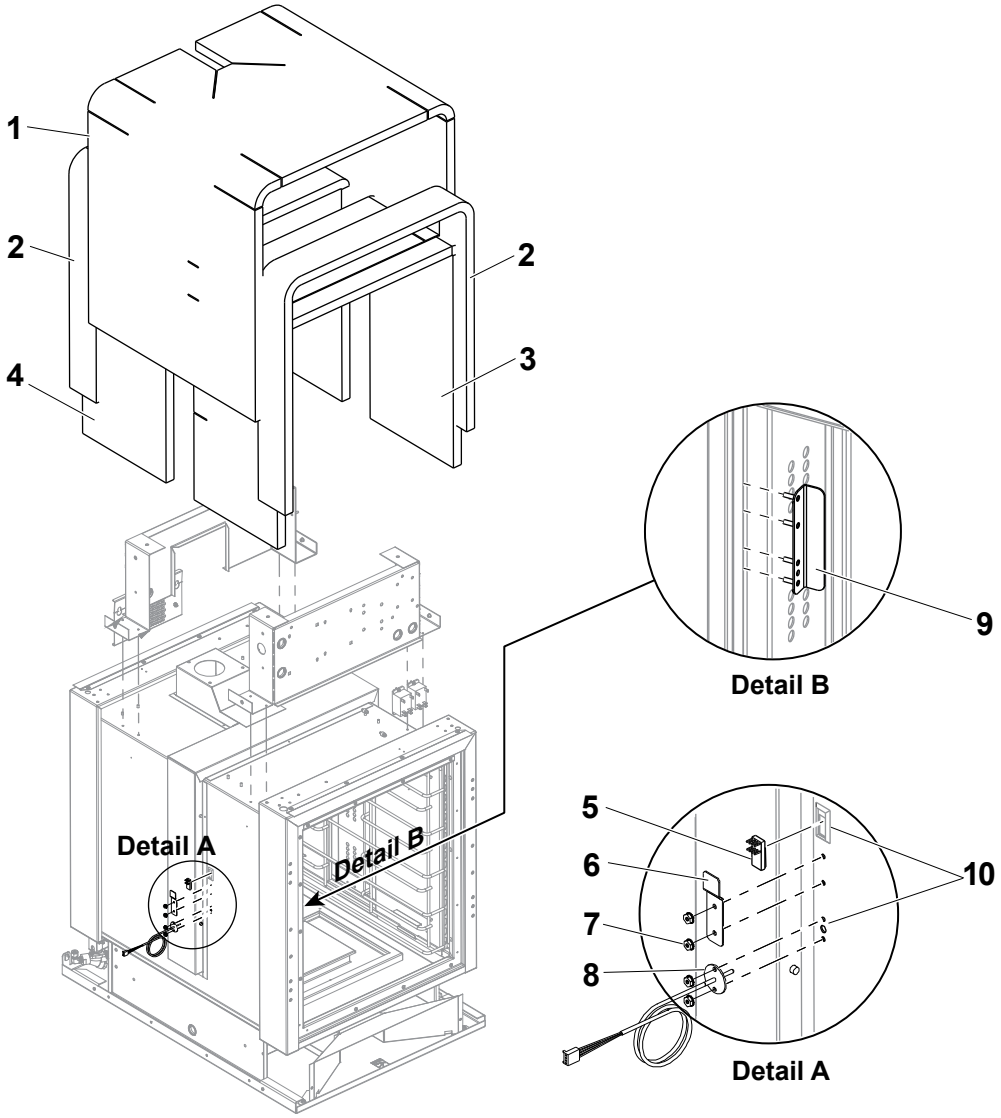

Figure: PL-9 FTU-5 Insulaton

FTU-5 HEATING COMPONENTS

ITEM	PART NUMBER	DESCRIPTION	QTY.
1	512765	THERMOSTAT, HI-LIMIT	1
2	169457	CVR, THRMSTAT HIGH LIMIT	1
3	169616	ELEMENT, HEATING, 220V 3200W	1
	169617	ELEMENT, HEATING, 208V 3200W	1

Table: PL-10 FTU-5 Heating Components

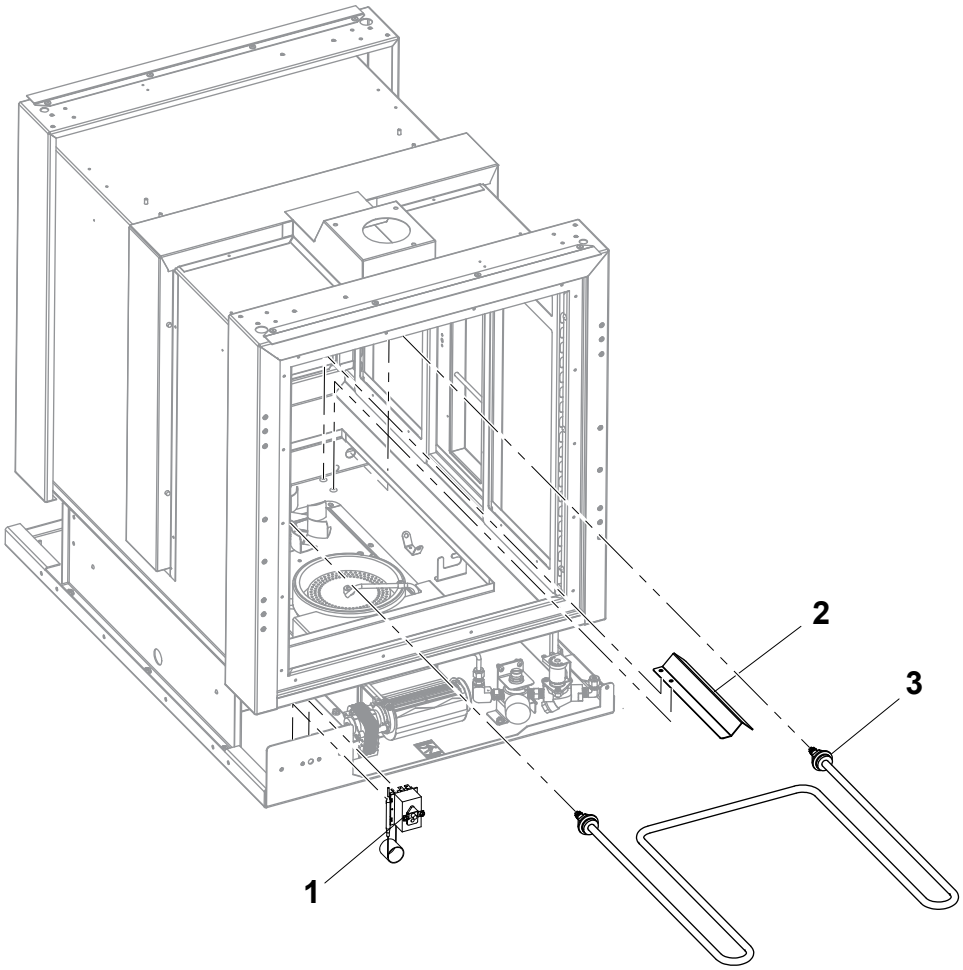

Figure: PL-10 FTU-5 Heating Components

FTU-5 SINGLE CORD REAR ADAPTER ASSEMBLY

ITEM	PART#	DESCRIPTION	QTY.
1	160486	STRAIN RELIEF, CORD	1
2	169610	FITTING, BULKHEAD 1/4" OD TUBING	1
3	175512	BUSHING, HEYCO,OPEN,1/2"	1
4	169792	CORD, POWER, 32A, 230V, 3PIN	1
	168879	CORD, POWER, 30A, 250V, L6-30P (NOT SHOWN)	1

Table: PL-11 FTU-5 Single Cord Rear Adapter Assembly

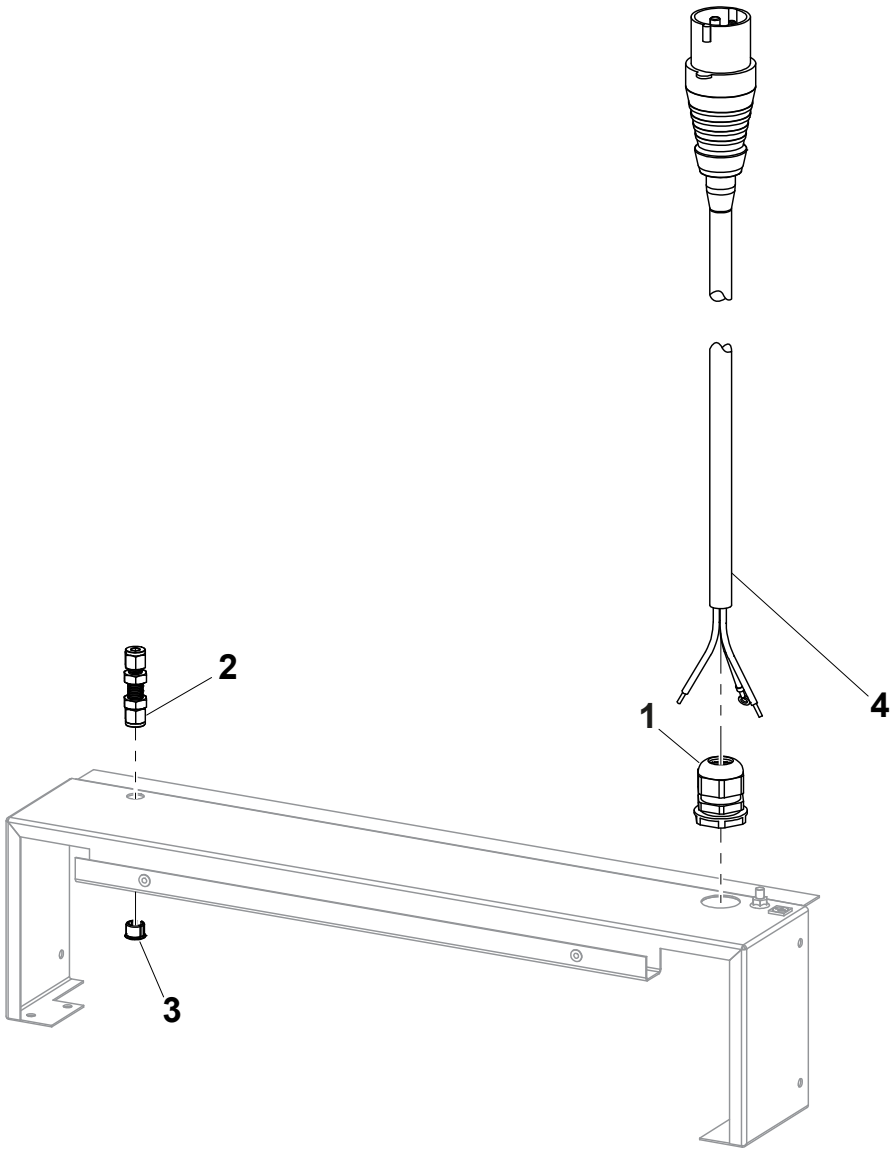

Figure: PL-11 FTU-5 Single Cord Rear Adapter Assembly

FTU-5 DUAL CORDS REAT ADAPTER ASSEMBLY

ITEM	PART NUMBER	DESCRIPTION	QTY.
1	169610	FITTING, BULKHEAD 1/4" OD TUBING	1
2	160486	STRAIN RELIEF, CORD	2
3	169792	CORD, POWER, 32A, 230V, 3PIN	2
	168879	CORD, POWER, 30A 250V L6-30P (NOT SHOWN)	2

Table: PL-12 FTU-5 Dual Cords Rear Adapter Assembly

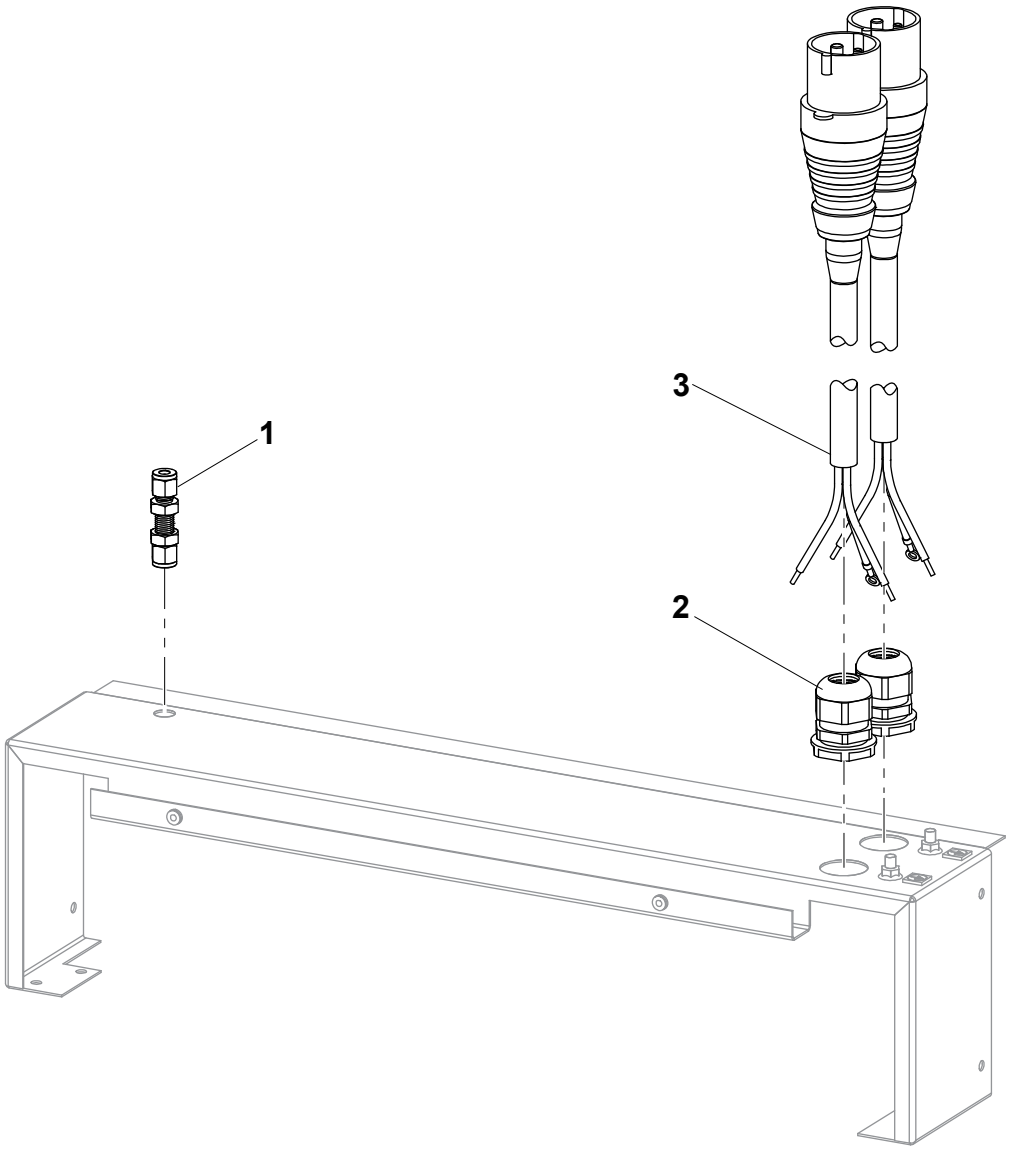

Figure: PL-12 FTU-5 Dual Cords Rear Adapter Assembly

FTU-5 & FTU-10 UNIT DOORS

ITEM	PART NUMBER	DESCRIPTION	QTY
1	169047	ASSY, SOLID DOOR, LEFT HINGE	2 or 4
	169048	ASSY, SOLID DOOR, RIGHT HINGE	
	169056	ASSY, GLASS DOOR, LEFT HINGE	
	169058	ASSY, GLASS DOOR, RIGHT HINGE	
	169070	ASSY, FLIP DOOR, LEFT HINGE	
	169071	ASSY, FLIP DOOR, RIGHT HINGE	
2	169675	HINGE, DOOR, FTU	2
3	169668	LATCH, FTU, DOOR	1
4	169053	WELDMENT, SOLID DOOR, FTU	1
5	512938	SCREW, #10-24 × 1 FL PH SS W/NYTEMP	4
6	407064	SCREW, 10-24 × 1.25", PN PH SS	2
7	10280400	SCREW, 10-24 × 3/8" TRUSS, HD SS	6
8	169636	FTU, DOOR, GLASS, DUAL PANE	1
9	169093	ASSY, FD, FRAME DOOR & CHANNEL	1
10	169712	SCREW, 10-24 × .25" TR PH MACHINE	6
Not Shown	175762	LOCTITE 272	A/R
Not Shown	297000	SEALANT, SILICONE, ALUMINUM, NSF	A/R

Table: PL-13 FTU-5 & FTU-10 Unit Doors

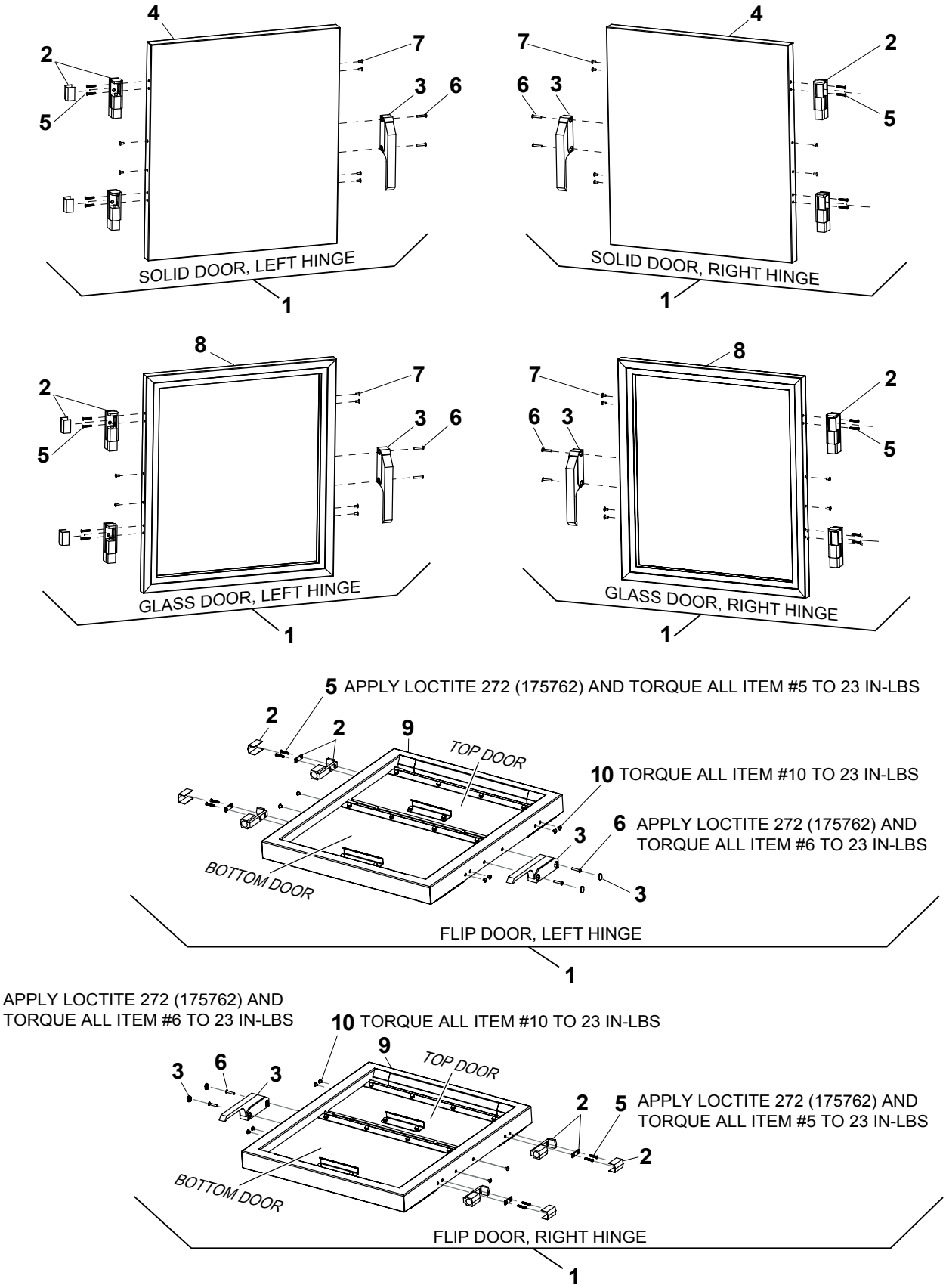

Figure: PL-13 FTU-5 & FTU-10 Unit Doors

FTU-5 & FTU-10 HARNESSES

PART NUMBER	DESCRIPTION	QTY.	
		FTU-5	FTU-10
120033	HARNESS MAIN CAN & VDC PW	1	1
169641	HARNESS, TRIGGER AND BEEP	1	1
169642	HARNESS, RH TO PCB	1	1
169643	HARNESS, 24VAC WATER VALVE	1	1
169644	JUMPER, RING SAFETY	2	1
169645	HARNESS, AC CONTROL	1	1
169813	HARNESS, TOP AC	1	1
169814	HARNESS, BOTTOM AC	1	1
169815	HARNESS, JUMPER AC		1
169816	HARNESS, FTU10 VALVE WATER AC		1

Table: PL-14 FTU-5 & FTU-10 Harnesses

NOTES

FTU-10 UNIT PANELS AND DOORS

ITEM	PART NUMBER	DESCRIPTION	QTY
1	279500	SCREW, 8-32X1/2" PTHMS 18-8SS	65
2	169195	PANEL, FTU-10 SIDE PAINTED	2
3	169685	SCREW, 10-24X1/2"FL PH SS W/NYLON PATCH	24
4	169446	LATCH, UPPER VENT COVER FTU	2
5	169567	OFFST, CLP BODY SPRT	4
6	169388	PANEL, TOP PAINTED	1
7	169135	ASY, PANEL INNER TOP	1
8	169132	ASY, BRACKET HINGE INNER TOP RIGHT	1
9	169133	ASY, BRACKET HINGE INNER TOP LEFT	1
10	169566	CHANNEL, BASE STIFFNER	2
11	512835	CASTER, 2-1/2" SWIVEL W/LO	2
12	387450	WASHER, 5/16 SPLIT RING PLT LK	20
13	169800	SCREW, 5/16'-18X1 3/4" CAP SS	20
14	147411	WASHER, 5/16 USS FLAT	4
15	512836	CASTER, 2-1/2" SWIVEL	2
16	513032	SCREW, 8-18X1/2"PN PH SS-T	72
17	169394	RETAINER, DOOR GSKT HORZ.	8
18	169395	RETAINER, DOOR GSKT VERT.	8
19	169637	GASKET, DOOR FTU	4

Table: PL-15 FTU-10 Unit Panels and Doors

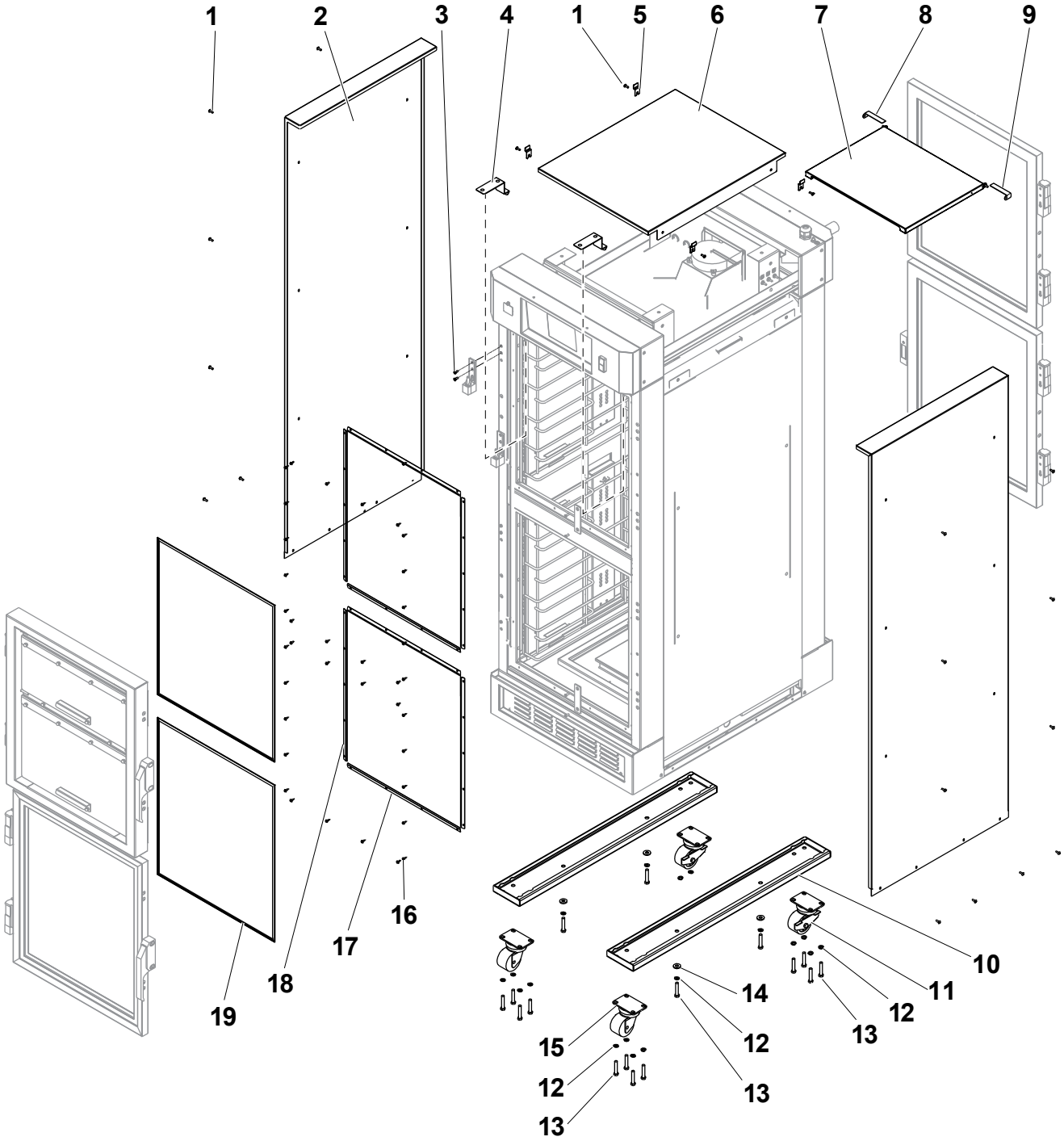

Figure: PL-15 FTU-10 Unit Panels and Doors

FTU-10 CONTROL PANEL

ITEM	PART NUMBER	DESCRIPTION	QTY
1	169045	ASY, FRONT ADAPTER	1
2	120007	CONNECTOR, USB PANEL MOUNT	1
3	513158	NUT, 8-32 SHLDR SERRATED HEX FLANGE Z ZINC	4
4	ELC0017-2	PCB,TSC, FTU	1
5	169028	WELDMENT, CONTROL PANEL (155625 Nutserts must be Factory Installed)	1
6	169629	SWITCH, SEALED CARLING	1
7	169680	OVERLAY, CONTROL FTU	1
9	168158	PLATE, DATA KEY COVER DSO	1
8	168500	SCREW, SHOULDER 3/16X3/16SL SS W/8-32 THREADS	1
10	168160	WASHER, .195 ID x .354 OD x .032 THK SS	2
11	156840	LABEL, ELECTRICAL DANGER	1
12	512893	RIVET, 3/16" S/S MONOBOLT	32
13	169614	SPACER, ALUM. .375 OD x .166 ID x .250 LG	7
14	225427	CONTACTOR	2
15	279500	SCREW, 8-32 x 1/2" PTHMS 18-8SS	2
16	175765	TRANSFORMER, 40VA 240VP 24VS W/ CONNECTORS ON LEADS	1
17	168378	SCREW, 8-32 x 3/8" PN PH SS	2
18	120103	FUSE, MOD CTRL TSC, #fwh-12.5a6f	2
19	160814	SCREW, 6-32 x 3/8 PN PH TF SS	2
20	120102	HOLDER, FUSE MOD CTRL TSC 354802-GY	1
21	168128	SCREW, 8-32 x 5/8" PN PH SS MACHINE	2
22	120005	SSR, 25A 3-30VDC TRIGGER	2
23	169397	PLT, HEAT SINK	1
24	169029	ASSEMBLY, SSR	1
25	169773	PCB, IO MODULE	1
26	120011	PCB, 12V PWR 208/230V	1
27	512766	BUZZER, ULTRA SOUND CONT T	1

Table: PL-16 FTU-10 Control Panel

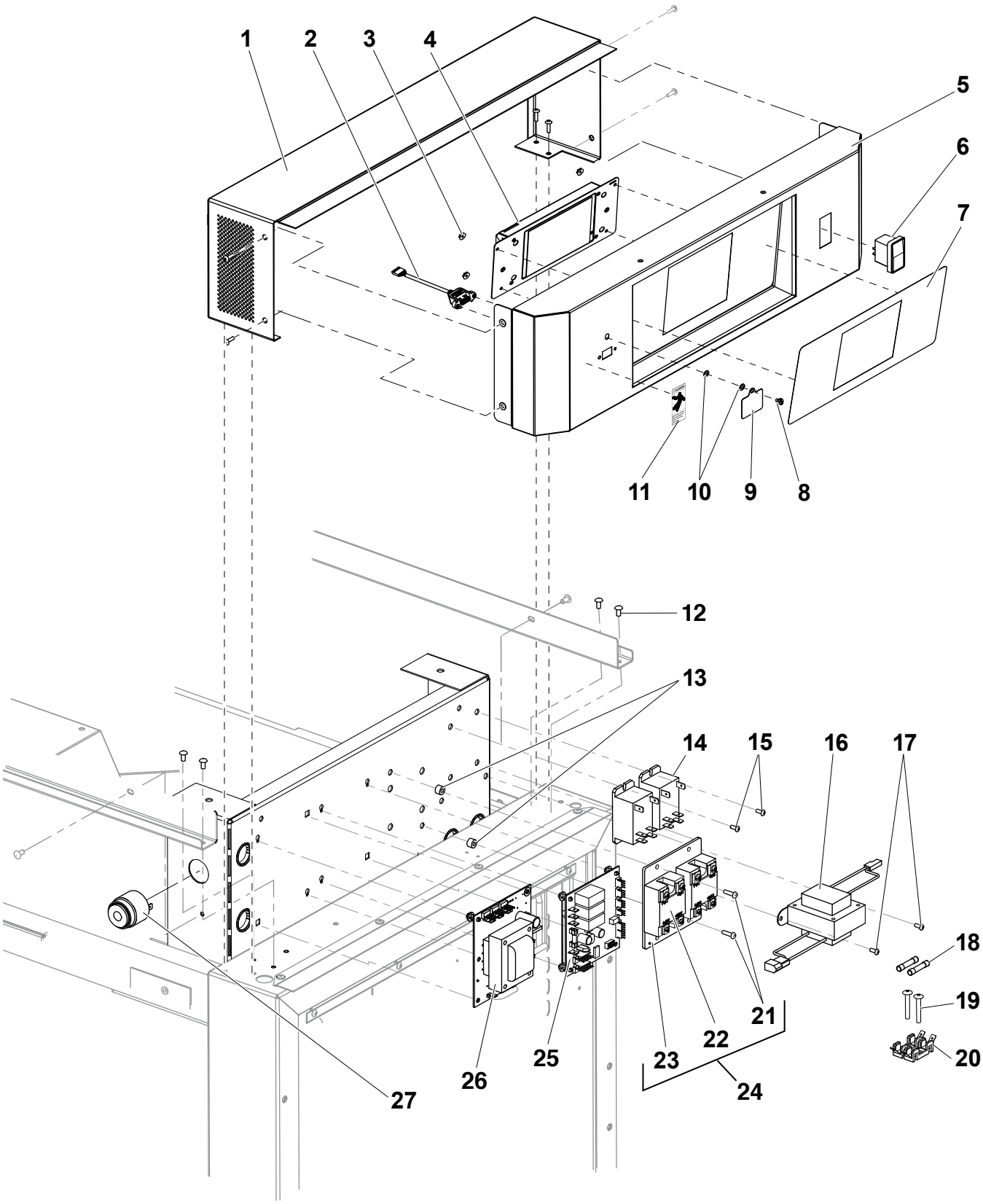

Figure: PL-16 FTU-10 Control Panel

FTU-10 REAR PANEL ASSEMBLIES

ITEM	PART NUMBER	DESCRIPTION	QTY
1	169026	ASSEMBLY, AXIAL FAN	1
2	169667	FAN, ORION MUFFIN	1
3	147264	SCREW, 8-32X1/4"PN PH ZP MACHINE	2
4	169398	WATER GUARD, TOP	1
5	169370	BRACKET, MTG COOLING FAN (155625 Nut-Serts must be Factory Installed)	1
6	10280400	SCREW, 10-24 x 3/8" TR PH SS MACHINE	35
7	279500	SCREW, 8-32 x 1/2" PTHMS 18-8SS	65
8	169044	ASY, PANEL REAR TOP	1
9	159101	SCREW, 8-32 x 1-1/2 PN PH SS	2
10	169760	STANDOFF, RUBBER	2
11	169610	FITTING, BULKHEAD 1/4" OD TUBING	1
12	160486	STRAIN RELIEF, CORD	1
13	168879	CORD, POWER 30A 250V L6-30P	1
	169792	CORD, POWER 32A 230V 3 PIN	1
14	169367	PANEL, INTERNAL TOP REAR (155625 Nut-Serts must be Factory Installed)	1
15	169670	BLOWER, VENT	1
16	297000	SEALANT, SILICONE ALUMINUM NSF UL APPROVED(ADASEAL)	A/R
17	169798	GASKET, FTU ACTIVE VENT	1
18	169052	WELDMENT, VENT REAR TOP	1

Table: PL-17 FTU-10 Rear Panel Assemblies

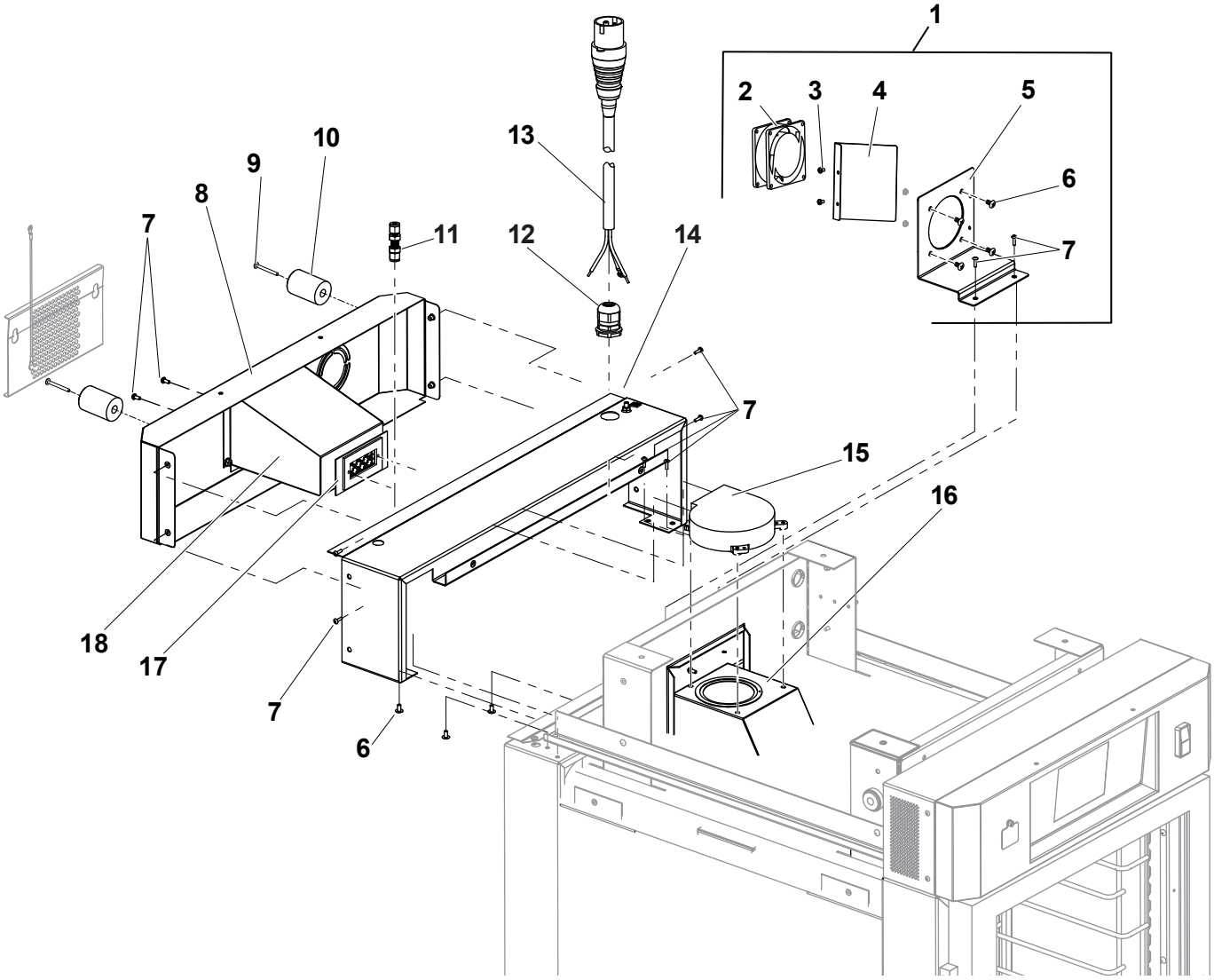

Figure: PL-17 FTU-10 Rear Panel Assemblies

FTU-10 INSULATION

ITEM	PART NUMBER	DESCRIPTION	QTY
1	169809	INSULATION, TOP FTU-10	1
2	169812	INSULATION, FRONT AND REAR FRAME	2
3	169810	INSULATION, BOTTOM	1
4	169811	INSULATION, BTTM W/ FAN CUTOUT	1
5	167564	NUT, KEPS 6-32 HEX SS	5
6	169393	CLIP, RH SENSOR	1
7	169669	SENSOR, RH	1
8	297000	SEALANT, SILICONE ALUMINUM NSF UL APPROVED(ADASEAL)	0.02
9	169627	RTD, 1M 100 OHM	1
10	169034	ASY, BRKT RTD & RH SENSOR	1

Table: PL-18 FTU-10 Insulation

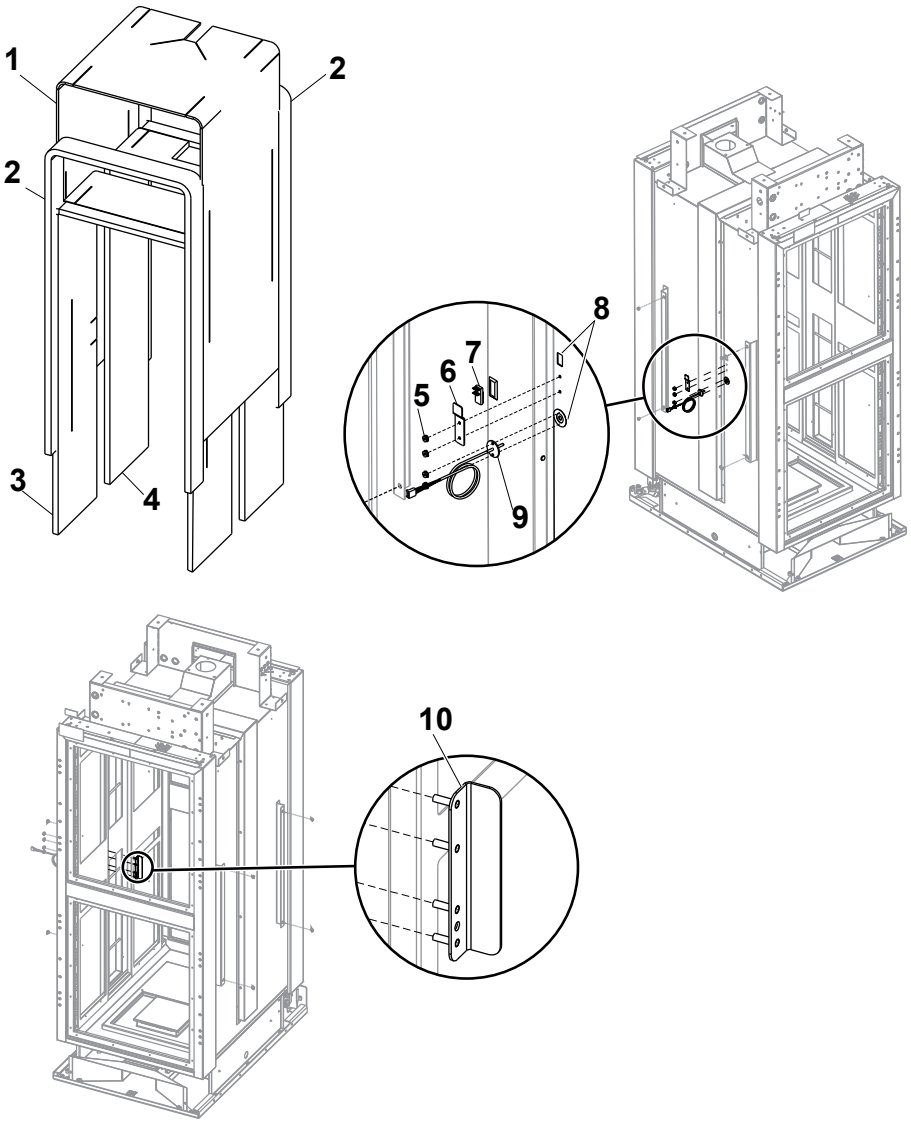

Figure: PL-18 FTU-10 Insulation

FTU-10 INTERIOR CABINET AND BASE

ITEM	PART NUMBER	DESCRIPTION	QTY
1	169759	RACK, WIRE FTU	4
2	169191	WELDMENT, HANDLE PNL INNER SIDE	8
3	169192	ASY, DUCT, FTU CMN VENT INTERNAL	4
4	169136	ASY, COVER, FTU DUCT REAR	1
5	167564	NUT, 6-32, HEX KEPS, SS	5
6	169343	PLATE, OUTLET	1
7	279500	SCREW, PHIL., TRUSS, HD, 8-32 x 1/2"	65
8	169187	WELDMENT, FTU FRONT BASE COVER	1
9	169679	VENEER, HI LIMIT	1
10	169676	INSULATION, LOWER, REAR	1
11	169042	ASY, INSULATION SUPPORT LEFT	1
12	169043	ASY, INSULATION SUPPORT RIGHT	1
13	169506	SUPPORT, FTU INSULATION CTR	1
14	169188	WELDMENT, FTU REAR BASE COVER	1
15	153657	BUSHING, SPLIT, 1.375 HOLE	1

Table: PL-19 FTU-10 Interior Cabinet and Base

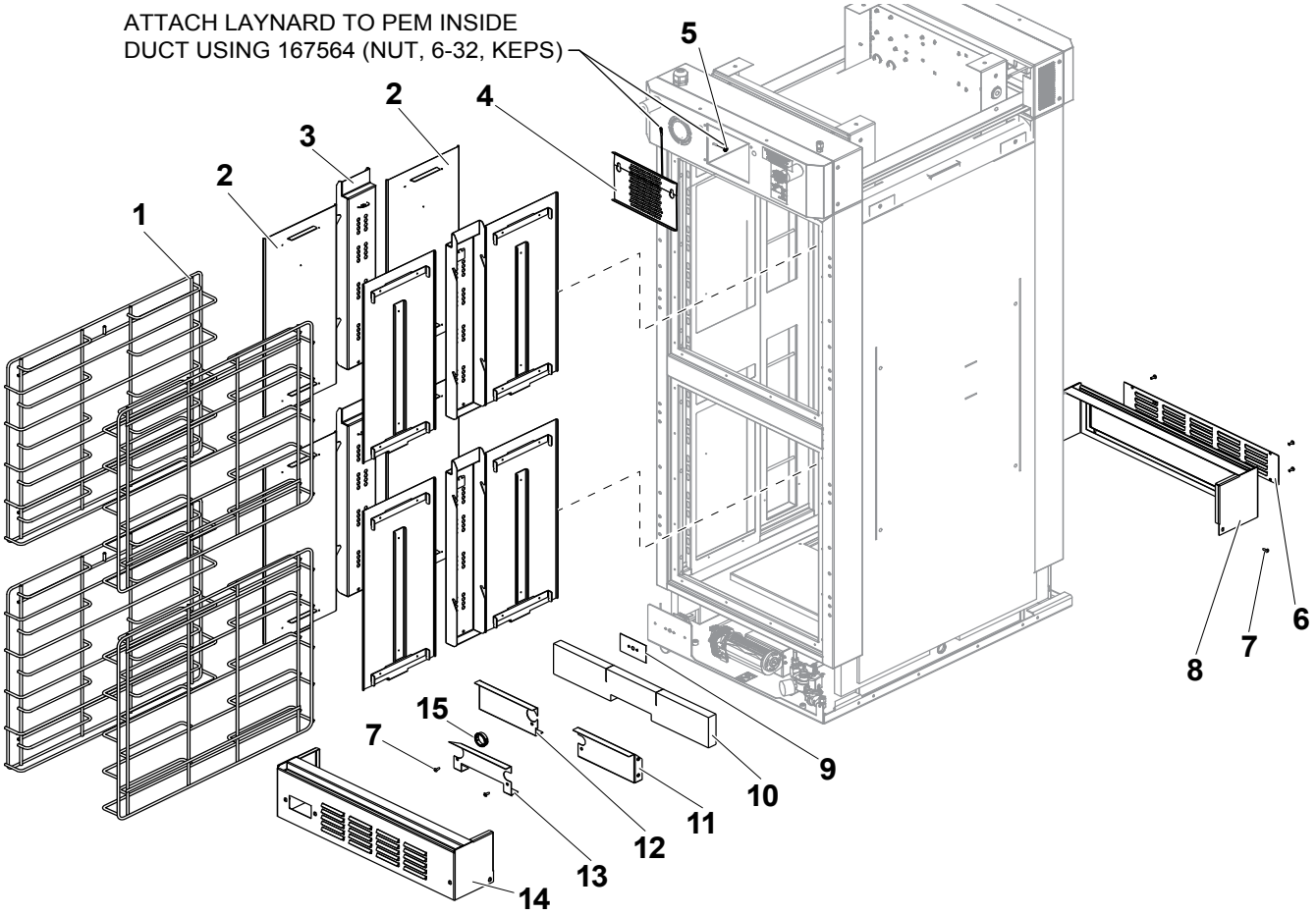

Figure: PL-19 FTU-10 Interior Cabinet and Base

FTU-10 BASE ASSEMBLY

ITEM	PART NUMBER	DESCRIPTION	QTY.
1	175514	BUSHING, HEYCO SHORTY 1" (HEYCO 2847)	1
2	169015	ASSEMBLY, INLET DUCT	1
3	169655	INSULATION,BASE	2
4	168429	BLOWER, SIDE TANGENTIAL 208-230VAC 105CFM	1
5	169784	SCREW, 6X3/8" PN PH SM SS	4
6	169656	INSULATION, COOLING DUCT	2
7	513158	NUT, 8-32 SHLDR SERRATED HEX FLANGE Z ZINC	9
8	169604	GROMMET, SILICONE .875	3
9	169337	PAN, INSULATION	2
10	262750	RIVET, 1/8" SS x 3/8-POP SSD-44-SSBS	4
11	169016	WELDMENT, DUCT MACHINE COMPT	1
12	169183	ASSEMBLY, FTU CASTER BASE	1
13	279500	SCREW, 8-32 x 1/2" PTHMS 18-8SS	2
14	169030	ASSEMBLY, INTERLOCK SWITCH SP	1
15	168303	SWITCH, SEALED W/ACTUATOR	1
16	169612	LOCKNUT, 8-32 SERRATED FLANGE HEX HEAD	10
17	169117	WELDMENT, OUTLET TRANSITION DUCT	1
18	169040	ASSEMBLY, SPILLAGE PAN	1

Table: PL-20 FTU-10 Base Assembly

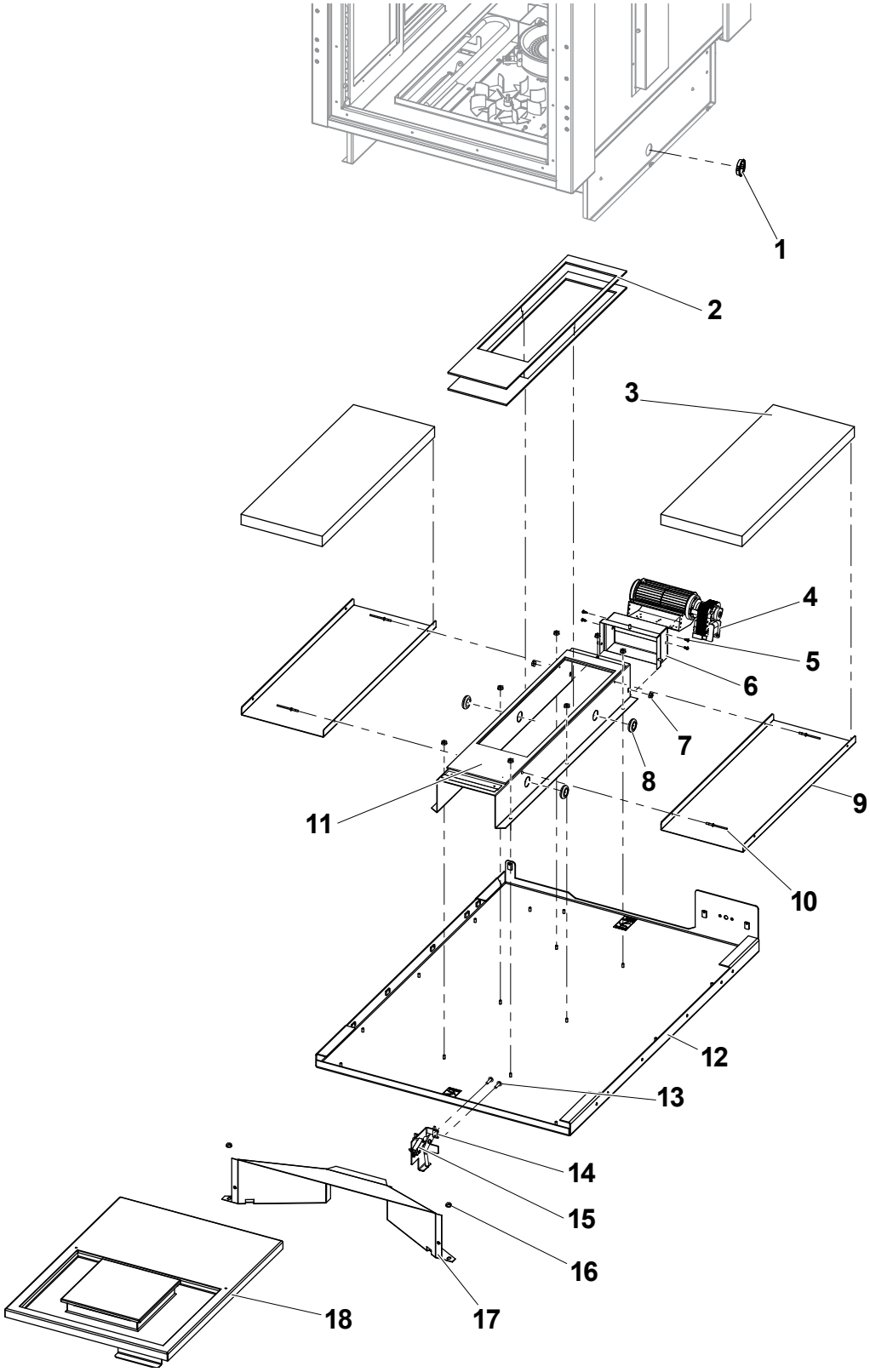

Figure: PL-20 FTU-10 Base Assembly

FTU-10 HUMIDIFICATION AND FAN ASSEMBLY

ITEM	PART NUMBER	DESCRIPTION	QTY.
1	169375	COVER, HIGH LIMIT	1
2	169781	SCREW, 10-24 X 3/8" FLG HEAD SER SS	13
3	169603	COLLAR, SHAFT SET SCREW 5/16"	2
4	169607	DISC, ATOMIZING 5" W/PERF.	1
5	512566	SCREW, 4-40X1/4"PN PH SS	2
6	169691	THERMOSTAT, SNAP DISC 400F	1
7	169019	WELDMENT, BLOCK HUMIDITY GEN.	1
8	169689	HEATER ASSEMBLY, 208V, W/TERMINATION	1
	169690	HEATER ASSEMBLY, 240V, W/TERMINATION	1
9	169018	ASY, BLOCK HUMIDITY	1
10	169659	TUBE,WATER AT CYLINDER	1
11	169665	TUBING, REGULATOR TO HUMID.SYS.	1
12	169610	FITTING, BULKHEAD 1/4" OD TUBING	1
13	169614	SPACER, ALUM. .375OD x .166ID x .250LG	7
14	169604	GROMMET, SILICONE .875	1
15	169020	WELDMENT, PAN HUMIDITY & FAN	1
16	169795	GASKET, FTU HUMID. VERT	1
17	169794	GASKET, FTU HUMID. BTTM	1
18	169658	INSULATION, HUMIDITY MOTOR	2
19	169023	WELDMENT, MOTOR INSUL. SUPPORT	1
20	169130	ASSEMBLY, MOTOR, FTU HUMID SLINGER 208V	1
	169131	ASSEMBLY, MOTOR, FTU HUMID SLINGER 230V	1
21	154219	NUT, KEPS 6-32 HEX ZP	2
22	169788	RTD, HUMIDITY 100 OHM	1
23	512778	MOTOR, SEALED PROOFER 50/60HZ CE	1
24	169657	SCREW, SET 1/4-28 SS	1
25	154019	BLOWER WHEEL	1
26	169022	ASY, BEARING SUPPORT	1
27	169612	LOCKNUT, 8-32 SERRATED FLANGE HEX HEAD	9
28	169660	CLAMP, LOOP STAINLESS STEEL	1
29	385350	WASHER,10 SS FLAT AN960CIOL	1
30	279050	SCREW, 8-32X1/4"TR SL SS MACHINE	1
Not Shown	512906	RTV, RED-HIGH TEMP NSF FDA,USDA,UL-10.1 CARTRIDG	A/R

Table: PL-21 FTU-10 Humidification and Fan Assembly

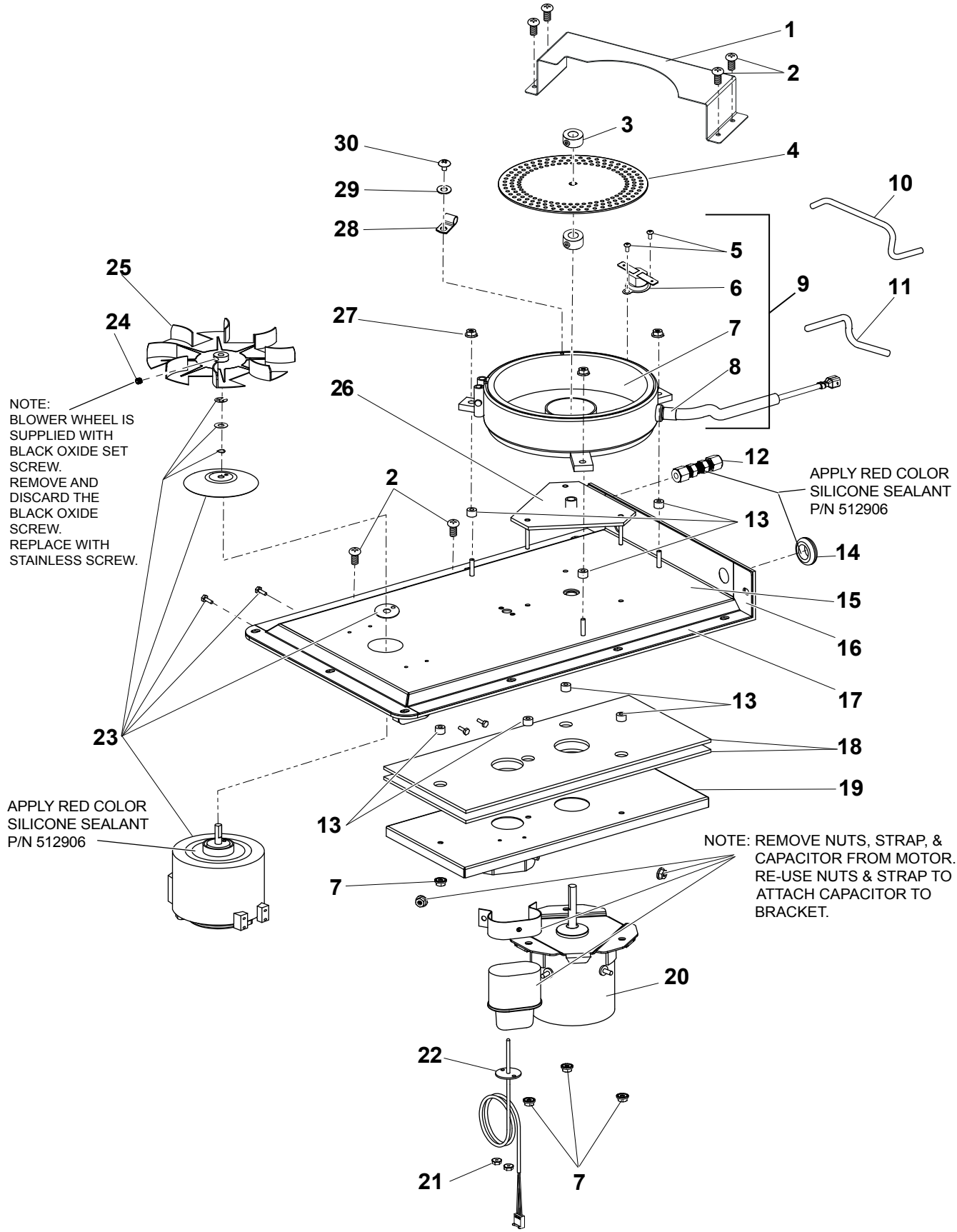

Figure: PL-21 FTU-10 Humidification and Fan Assembly

FTU-10 HEATING COMPARTMENT

ITEM	PART NUMBER	DESCRIPTION	QTY
1	169781	SCREW, 10-24 x 3/8" FLG HEAD SER SS	13
2	169507	HEAT SHIELD, THERMOSTAT HI LIMIT	1
3	169616	ELEMENT, HEATER 230V 3200W	1
	169617	ELEMENT, HEATER 208V 3200W	1
4	512765	THERMOSTAT, HI-LIMIT	1

Table: PL-20 FTU-10 Heating Compartment

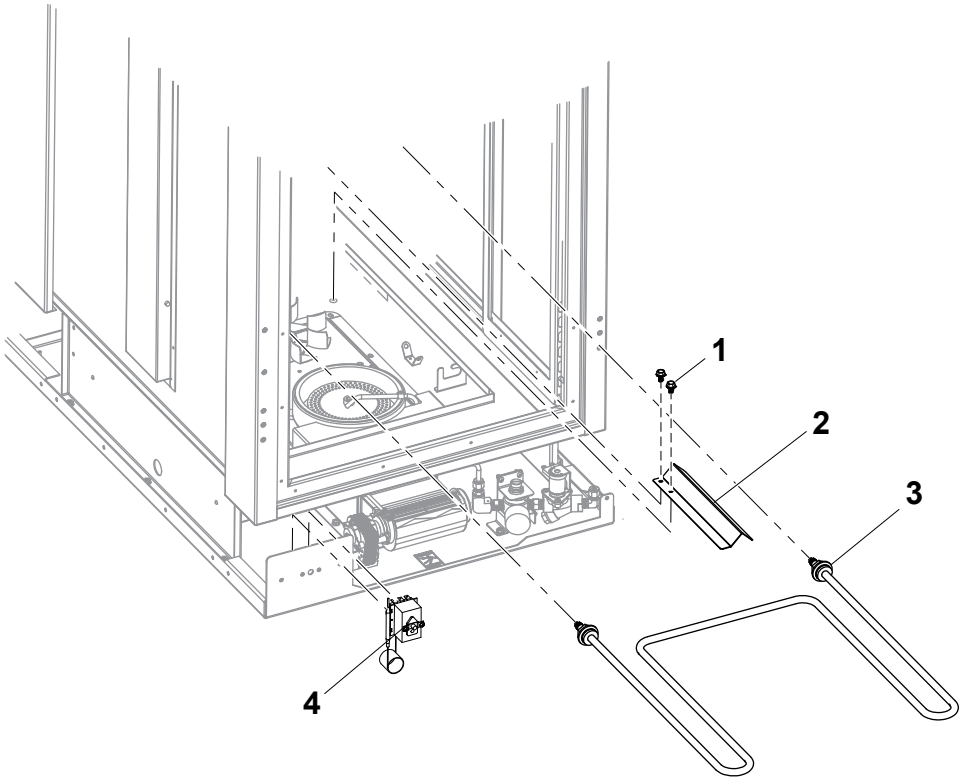

Figure: PL-22 FTU-10 Heating Compartment

FTU-10 WATER SUPPLY ASSEMBLY COMPONENTS

ITEM	PART NUMBER	DESCRIPTION	QTY.
1	169611	FITTING, BRASS YOR-LOK ADAPTER 1/4 TUBE X 1/4 NPT MALE	1
2	169618	ELBOW, .250 NPT 90 DEGREE	1
3	169602	ORIFICE, FLOW RESTRICTOR 0.035" ORIFICE DIA. 1/4" NPT MALE	1
4	169055	ASSEMBLY, REGULATOR BRACKET WATER SUPPLY	1
5	169301	ANGLE, REGULATOR	1
6	169606	VALVE, SOLENOID DEMA P442	1
7	169633	FITTING, BRASS YOR-LOK 90 DEGREE ELBOW 1/4 TUBE X 1/4 NPT MALE	1
8	169678	FITTING, PIPE 1/4" NPT BRASS HEX NIPPLE	1
9	169605	REGULATOR, WITH GAUGE 1/4 NPT FEMALE	1
10	168378	SCREW, 8-32 x 3/8" PN PH SS	2
11	169803	TUBE, WATER SUPPLY STND ALONE UNIT	1
Not Shown	338475	TAPE, 1/2" x 520" TEFLON	A/R

Table: PL-23 FTU-10 Water Supply Assembly Components

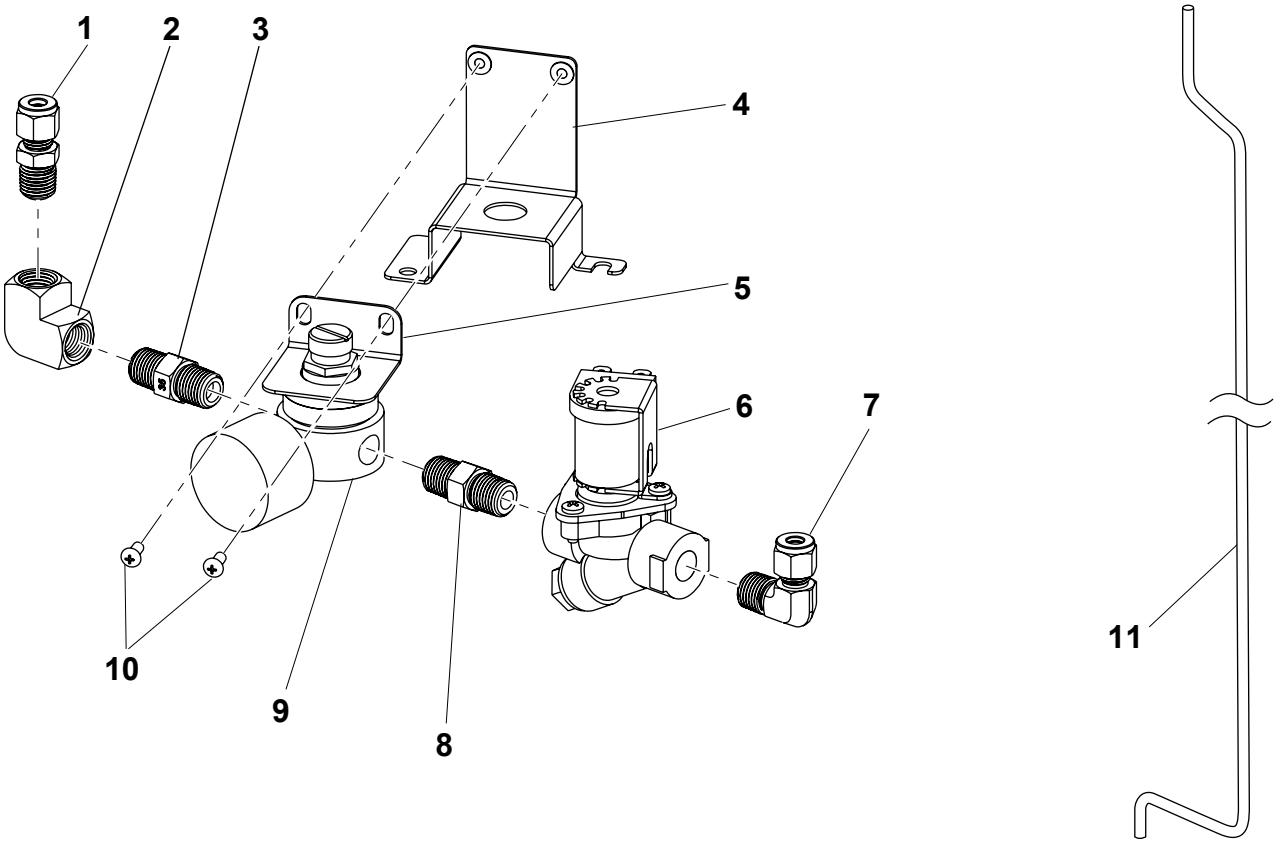

Figure: PL-23 FTU-10 Water Supply Assembly Components

NOTES

NOTES

Your Solutions Partner

Duke Manufacturing Co.

2305 N. Broadway • St. Louis, MO 63102

800-735-3853 • 314-231-1130

Fax: 314-231-5074

www.dukemfg.com