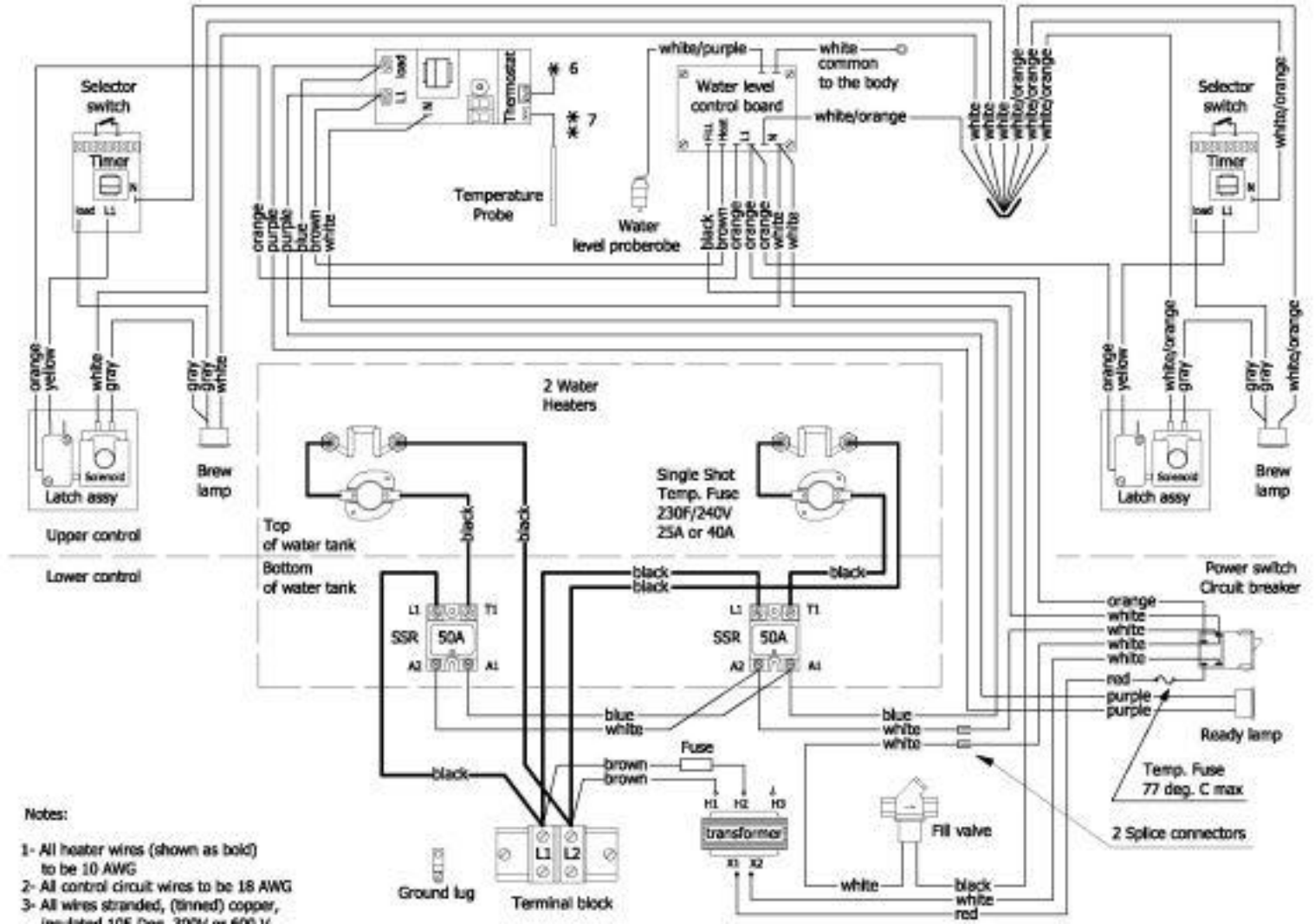
Selector switch
Timer
Thermostat
Temperature Probe
Water level control board
white/purple
white common to the body
white/orange
Water level proberobe
Selector switch
Timer
Latch assy
Brew lamp
Upper control
Lower control
2 Water Heaters
Top of water tank
Bottom of water tank
Single Shot Temp. Fuse 230F/240V 25A or 40A
SSR 50A
Latch assy
Brew lamp
Power switch Circuit breaker
Ready lamp
Temp. Fuse 77 deg. C max
2 Splice connectors
Fuse
transformer
Fill valve
Ground lug
Terminal block
Notes:
1- All heater wires (shown as bold) to be 10 AWG
2- All control circuit wires to be 18 AWG
3- All wires stranded, (tinned) copper, insulated 105 /ow, 300V or 600 V

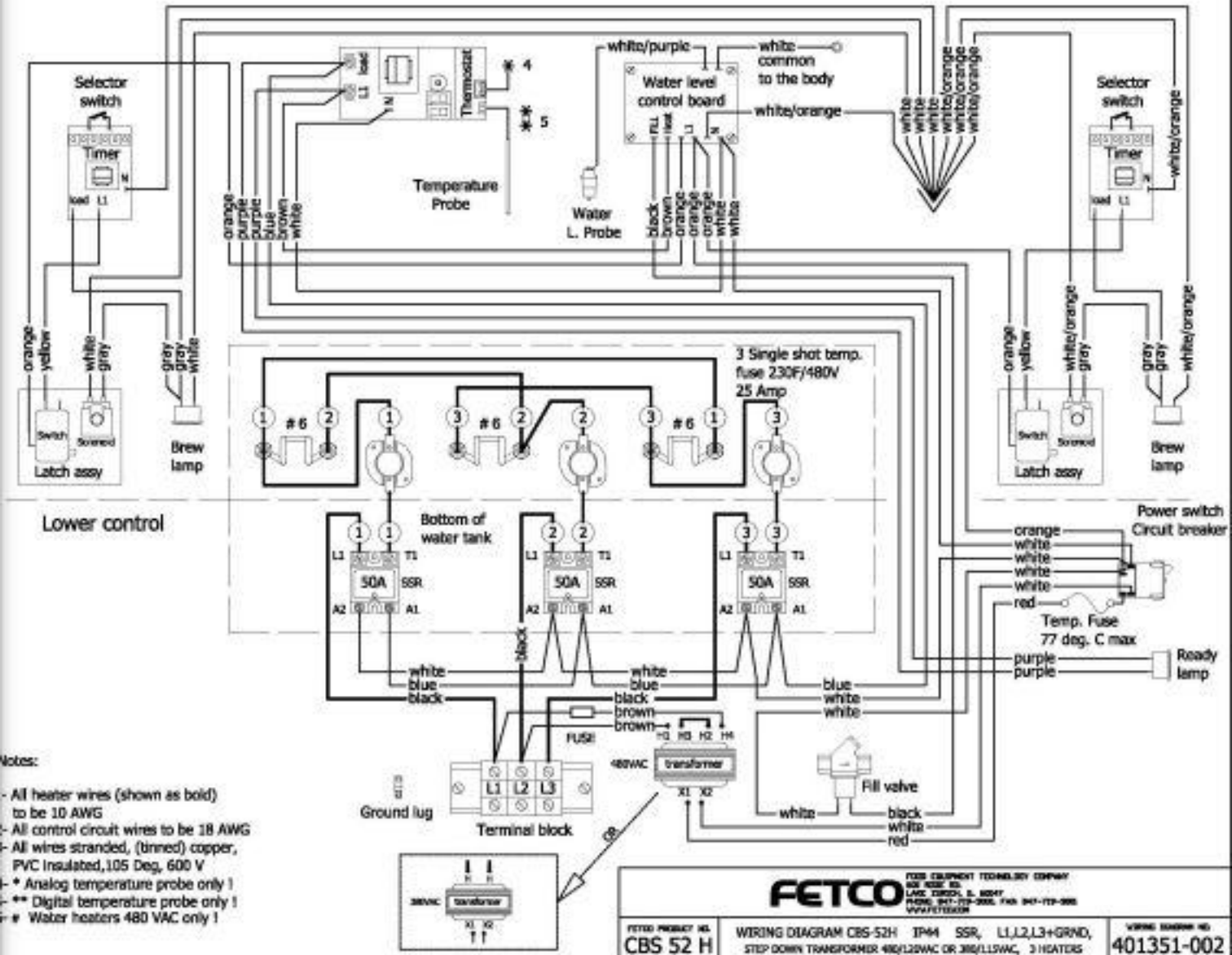
Selector switch
Timer
load
L1
N
Thermostat
* 4
** 5
Temperature Probe
Water level control board
FILL
load
L1
N
white/purple
white common to the body
white/orange
Water L. Probe
orange
purple
purple
blue
brown
white
black
brown
orange
orange
white
white
white
white
white
white/orange
white/orange
white/orange
white/orange
white/orange
orange
yellow
white
gray
gray
gray
white
Switch
Solenoid
Latch assy
Brew lamp
3 Single shot temp. fuse 230F/480V 25 Amp
#6
Lower control
Bottom of water tank
L1
T1
50A
SSR
A2
A1
black
white
blue
black
brown
brown
FUSE
H1 H3 H2 H4
480VAC
transformer
X1 X2
Ground lug
L1 L2 L3
Terminal block
Fill valve
Power switch
Circuit breaker
orange
white
red
Temp. Fuse
77 deg. C max
purple
purple
Ready lamp
Notes:
- All heater wires (shown as bold) to be 10 AWG
- All control circuit wires to be 18 AWG
- All wires stranded, (tinned) copper, PVC Insulated,105 Deg, 600 V
- * Analog temperature probe only !
- ** Digital temperature probe only !
- # Water heaters 480 VAC only !
FETCO
FETCO PRODUCT NO.
CBS 52 H
WIRING DIAGRAM CBS-52H IP44 SSR, L1,L2,L3+GRND,
STEP DOWN TRANSFORMER 480/120VAC OR 380/115VAC, 3 HEATERS
WIRING DIAGRAM NO.
401351-002