Replacement Parts for Pot Filler

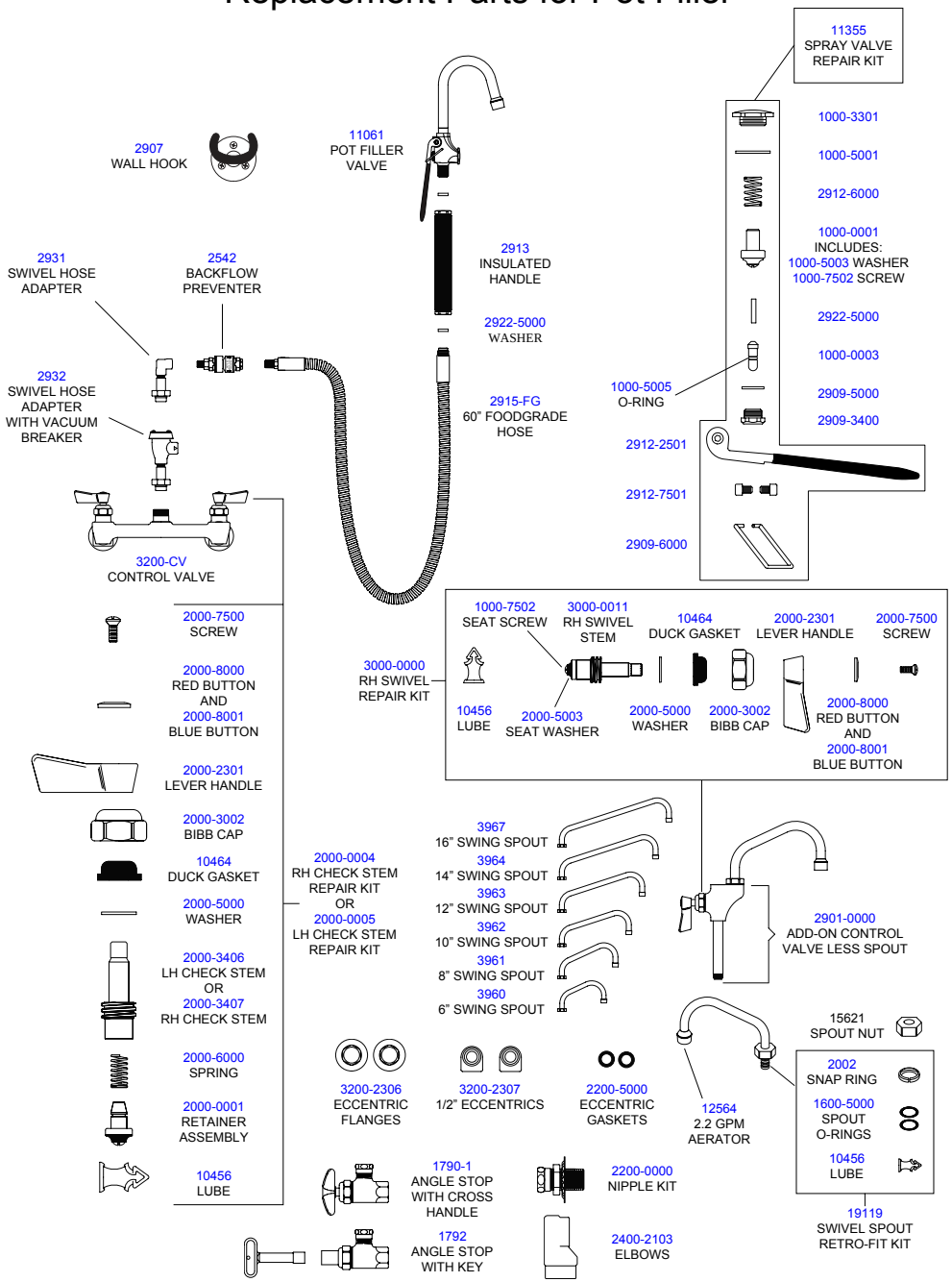

FISHER
MANFACTURING COMPANY
PO BOX 60, TULARE, CA 93275
(800)421-6162, FAX: (800)832-8238
www.fisher-mfg.com

PART NO. 39438

REV. A

FISHER
FISHER MANUFACTURING COMPANY

8" Adjustable Wall Mount Pot Filler Product Installation Guide

Since 1936, Fisher Manufacturing Company has manufactured heavy-duty, high quality plumbing products and hardware specialties for the food service industry. For three generations, the Fisher family has adhered to a strict dedication of and overall value. When you install Fisher products… you install the best. Our hardware is manufactured with the standardization of internal mechanisms. All chrome plating is triple plated copper, nickel and chrome for durability. Every piece of equipment we make is rigorously tested in both our modern in-house testing center and in actual field situations under extreme conditions. Every detail is thoroughly checked. Before we make our products available to you, they pass each and every test. You get proven performance. Guaranteed.

Limited One Year Warranty

Fisher Manufacturing Company warrants its products and parts thereof (except as noted below) against defects in materials or workmanship for a period of one year after the date of original purchase. During this period Fisher Manufacturing Company will replace a defective product or part without charge to you, provided that the entire product is delivered to Fisher Manufacturing Company. All transportation and insurance charges for shipping the product to and from Fisher Manufacturing Company must be borne by you. Charges for transportation and insurance may, at the option of Fisher Manufacturing Company, be refunded depending upon our investigation of the warranty claim. This warranty does not cover external finish (except at date of original purchase) or labor costs not specifically authorized by Fisher Manufacturing Company.

A full and complete copy of our One Year limited warranty is available upon request.

WARNING:
Proposition 65 requires that we provide you with the following notice: "This product Contains A Chemical Known To The State Of California To Cause Birth Defects Or Other Reproductive Harm."



#2240 - Pot Filler: 8" Adjustable Wall Mount Control Valve with Vacuum Breaker and Wall Hook

#2250 - Pot Filler: 8" Adjustable Wall Mount Control Valve with Swivel Hose Adapter and Wall Hook

KEEP THIS MANUAL FOR FUTURE REFERENCE

ANSI/A112.18.1M, ANSI/NSF 61.9

FISHER MANUFACTURING COMPANY - TOLL FREE: 800-421-6162 FAX: 800-832-8238

www.fisher-mfg.com

Installation Instructions for Pot Filler

BE SURE TO CHECK WITH YOUR LOCAL DEPARTMENT HAVING JURISDICTION REGARDING BACKFLOW PREVENTION

Installation Notes:

- Be sure to shut off water supply before beginning.
- Use pipe thread sealant such as PST on all threaded joints.
- Check the packaging for missing items BEFORE beginning installation. If items are missing, contact your supplier.

Tools Required for Installation

- Medium Sized Crescent Wrench
- Pipe Thread Sealant
- Phillips Screwdriver



Installation Instructions

1. Insert the gasket into the groove on the eccentric. Making sure gasket is in place, loosely mount the eccentric and flange onto the control valve body.
2. If no add-on faucet will be installed, proceed to step 3. If installing an add-on faucet, mount the small riser to the control valve body using thread sealant. Thread the add-on faucet to the other end of the small riser, again using thread sealant.
3. Mount control valve body to either a wall with male supply nipples, or a backsplash with nipples (not included). Be sure to use pipe thread sealant on the supply nipple threads. Adjust the eccentrics as needed in order to mount the control valve level. Once level, tighten the eccentrics.
4. Mount either the swivel hose adapter with vacuum breaker (2932) or swivel hose adapter without vacuum breaker (2931) to control valve body. Use lube on the o-rings on the swivel hose adapter and be sure white snap ring is in place. Tighten nut until swivel hose adapter is secure.
5. If installing a backflow preventer, do so by applying thread sealant and inserting into the swivel hose adapter, tightening until secure. Be sure that arrows on backflow preventer are pointing in direction of flow. Using pipe thread sealant, insert the stainless steel hose into either the backflow preventer or the swivel hose adapter and tighten nut until secure.
6. Fit one of the handle gaskets inside the outlet of the insulated handle and mount the pot filler valve onto it. Fit the other handle gasket inside the inlet of the insulated handle and mount the handle onto the stainless steel hose. Be sure that gaskets are used on both sides of the insulated handle.

Step 1

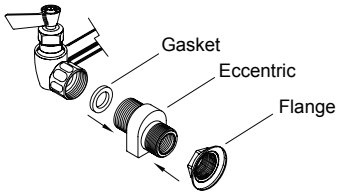

Step 2

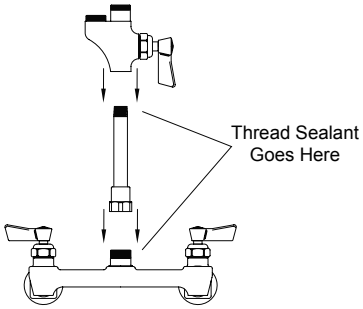

Step 3

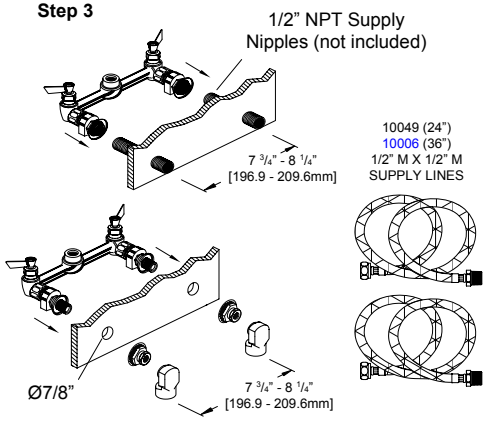

Installation Instructions Continued

7. To install the wall bracket, determine a good location and hold firmly against the wall. Using a screwdriver, insert the three screws through the holes in the wall hook and screw into the wall.
8. To install swing spout to add-on faucet, apply lube to the o-rings on the swing spout. Make sure the white snap ring is in place before mounting the swing spout. Mount the swing spout and tighten the swing spout nut onto the add-on faucet spout outlet
9. Turn on water supply and check for leaks.

Step 4

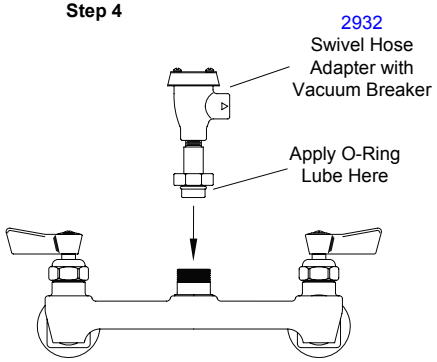

Step 5

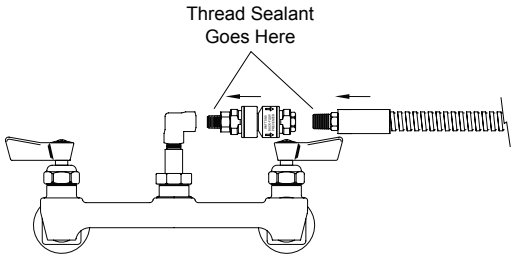

Step 6

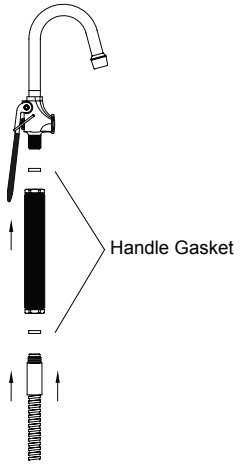

Step 7

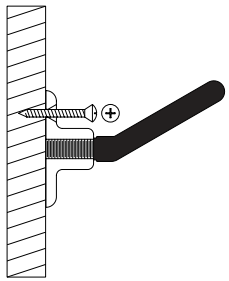

Step 8

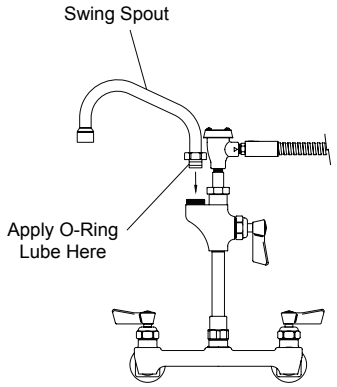

Step 9

