APPLICATION:

JOB NAME:

QUANTITY: | ITEM NO.

PRODUCT NAME:
4" C/C REMOTE CONTROL VALVE
WITH CHECK STEMS

☐ _____ SPECIAL CONFIGURATION
CHECK BASE MODEL AND OPTIONS

MODEL:
■ 2805-CV

OPTIONS OR MODIFICATIONS:
☐ OTHER _____

FEATURES

* 4" C/C REMOTE CONTROL
* INTERNAL SPRING LOADED CHECK VALVES
* SWIVELLING SEAT DISKS
* HOT SIDE STEM - RIGHT HAND
* COLD SIDE STEM - LEFT HAND
* STAINLESS STEEL SEATS
* STAINLESS STEEL SEAT SCREWS
* STAINLESS STEEL HANDLE SCREWS
* 1/2" SLIP JOINT

SHIPPING WEIGHT
* 3.25 LBS

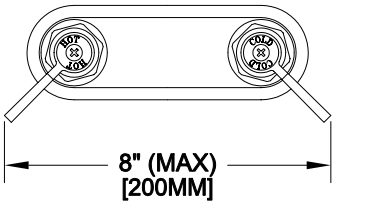

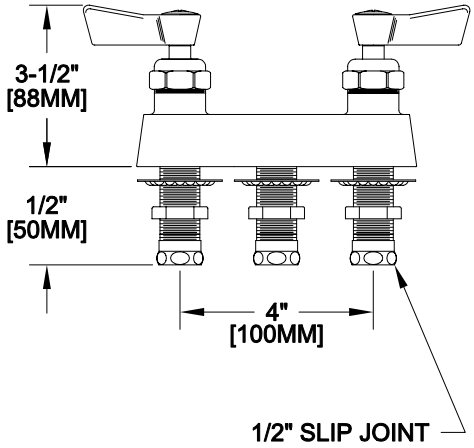

FOOTPRINT:

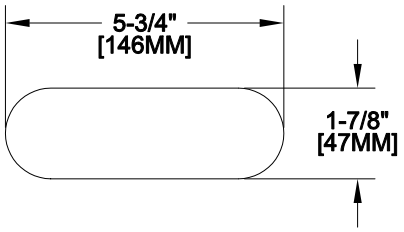

ROUGH-IN:

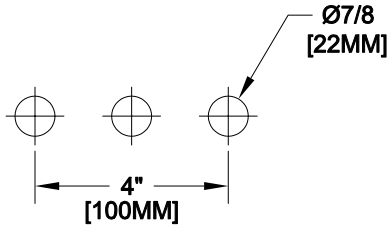

ANSI/A112.18.1M

FISHER MANUFACTURING COMPANY
TOLL FREE: 800-421-6162 - FAX: 800-832-8238
information@fisher-mfg.com - www.fisher-mfg.com

SPEC. 2805-CV REV. D