FISHER MANUFACTURING COMPANY TOLL FREE: 800-421-6162 - FAX: 800-832-8238
customer@fisher-mfg.com - www.fisher-mfg.com

PRODUCT NAME:
SPRAY HEAD 3/8"F INLET

SPEC. CPRB-PRSH-XX

Customer/Wholesaler:	Date:	Job Name:	Model Specified:	Quantity:
Contracter:	Architect/Engineer:			

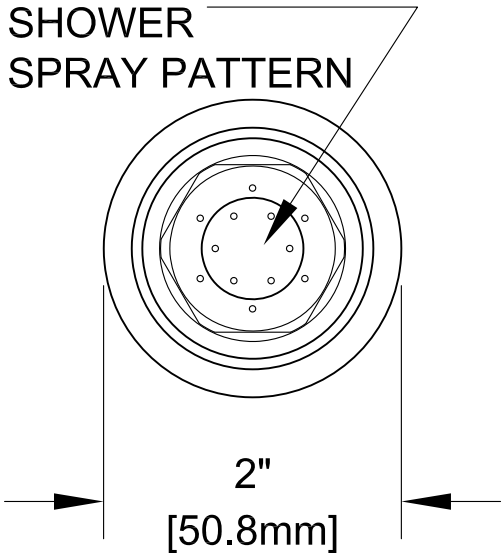

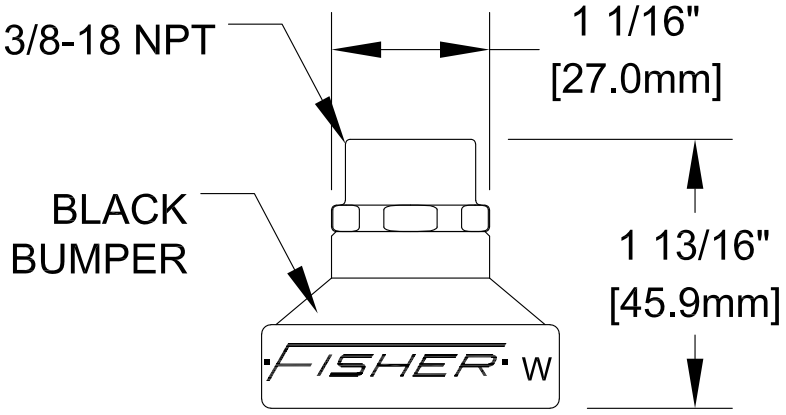

MODEL:
☐ 2923 SPRAY HEAD 3/8"F INLET

OPTIONS OR MODIFICATIONS:
☐ OTHER _____

FEATURES

* BLACK DISH GUARD BUMPER
* SHOWER SPRAY PATTERN

SYSTEM LIMITS
* TEMP: 40°F MIN. TO 160°F MAX.
* PRESSURE 200 PSI MAX. STATIC
* 2.15 GPM AT 60 PSI (8.14 L/min @410 KPa)

SHIPPING WEIGHT
* 0.3800

PRODUCT COMPLIANCE:
* ASME A112.18.1 / CSA B125.1
* NSF 61 - Section 9
* NSF 372 (Low Lead Content)

Drawn: DF	Checked: EM	Approved: DF	Date: 02/22/23	Sheet: 1 of 1