Replacement Parts for Backsplash Faucets

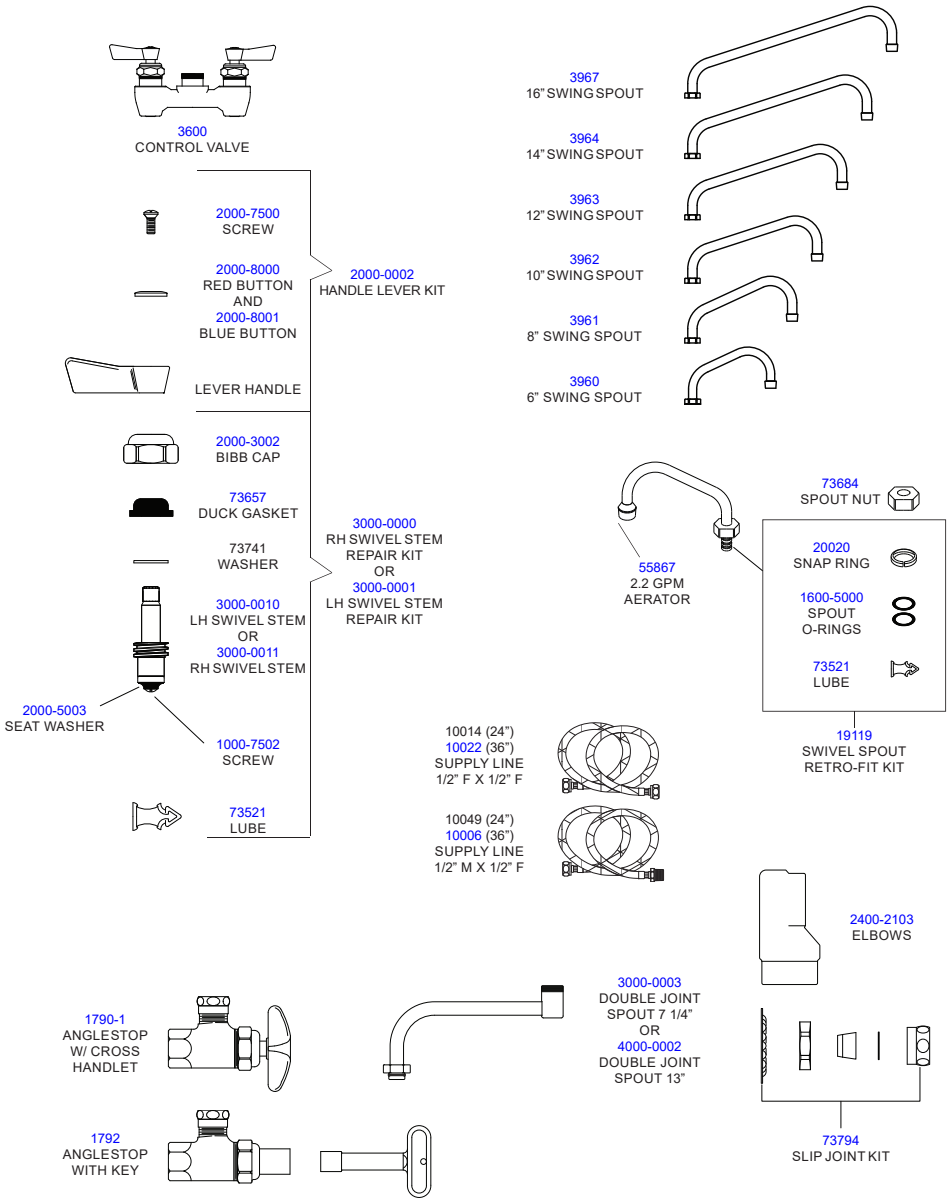

FISHER
MANFACTURING COMPANY
PO BOX 60, TULARE, CA 93275
(800)421-6162, FAX: (800)832-8238
www.fisher-mfg.com

PART NO. 73904

REV. A

FISHER MANUFACTURING COMPANY

FAHB-KF-4BSLL
Product Installation Guide

Since 1936, Fisher Manufacturing Company has manufactured heavy-duty, high quality plumbing products and hardware specialties for the food service industry. For three generations, the Fisher family has adhered to a strict dedication of and overall value. When you install Fisher products… you install the best. Our hardware is manufactured with the standardization of internal mechanisms. All chrome plating is triple plated copper, nickel and chrome for durability. Every piece of equipment we make is rigorously tested in both our modern in-house testing center and in actual field situations under extreme conditions. Every detail is thoroughly checked. Before we make our products available to you, they pass each and every test. You get proven performance. Guaranteed.

Limited One Year Warranty

Fisher Manufacturing Company warrants its products and parts thereof (except as noted below) against defects in materials or workmanship for a period of one year after the date of original purchase. During this period Fisher Manufacturing Company will replace a defective product or part without charge to you, provided that the entire product is delivered to Fisher Manufacturing Company. All transportation and insurance charges for shipping the product to and from Fisher Manufacturing Company must be borne by you. Charges for transportation and insurance may, at the option of Fisher Manufacturing Company, be refunded depending upon our investigation of the warranty claim. This warranty does not cover external finish (except at date of original purchase) or labor costs not specifically authorized by Fisher Manufacturing Company.

A full and complete copy of our One Year limited warranty is available upon request.

⚠ **Warning:** This product can expose you to chemicals including Lead, Nickel (Metallic), Di(2-ethylhexyl) phathalate (DEHP) which are known to the State of California to cause cancer, and Lead. Di(2-ethylhexyl) phathalate (DEHP) which are known to the State of Califorina to cause birth defects or reproductive harm. For more information go to:
www.P65Warnings.ca.gov.



#3610 - FAUCET 4BSLH 06SS
#3611 - FAUCET 4BSLH 08SS
#3612 - FAUCET 4BSLH 10SS
#3613 - FAUCET 4BSLH 12SS
#3614 - FAUCET 4BSLH 14SS
#1783 - FAUCET 4BSLH 16SS

KEEP THIS MANUAL FOR FUTURE REFERENCE

ANSI/A112.18.1M, ANSI/NSF 61.9

Installation Instructions for Backsplash Faucets

BE SURE TO CHECK WITH YOUR LOCAL DEPARTMENT HAVING JURISDICTION REGARDING BACKFLOW PREVENTION

Installation Notes:

- Be sure water supply is shut-off before beginning.
- Use pipe thread sealant on all threaded joints such as PST or Teflon tape.
- Check the packaging for missing items BEFORE beginning installation. If items are missing, contact your supplier.

Items needed for Installation:

- 1 - Medium Sized Crescent Wrenches
- 1 - Plumbers Tape or Pipe Thread Sealant

Step 1.
After unpacking items and checking for missing components, insert the gasket into the groove on the concentric. Making sure gasket is in place, loosely mount the concentric and flange onto the control valve body.

Step 2.
Mount control valve body to the backsplash by inserting the concentrics through the backsplash and attaching slip joints. Tighten concentrics and attach elbows and supply lines (not included) as required. Be sure to use pipe thread sealant on all threads.

Step 3.
Apply O-ring lube to the O-rings on the swing spout. Make sure the white snap ring is in place before mounting the swing spout. Mount the swing spout and tighten the swing spout nut onto the faucet spout outlet.

Step 4.
Turn on water supply and check for leaks.

Step 1

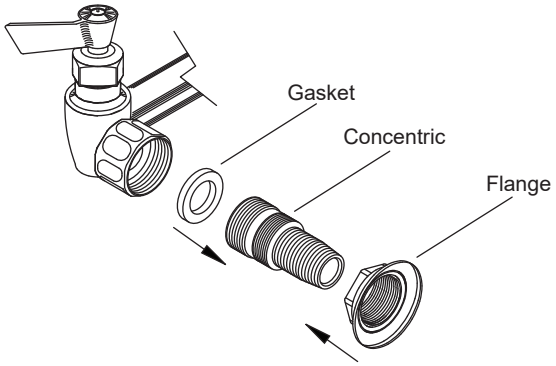

Installation Instructions Continued

Step 2

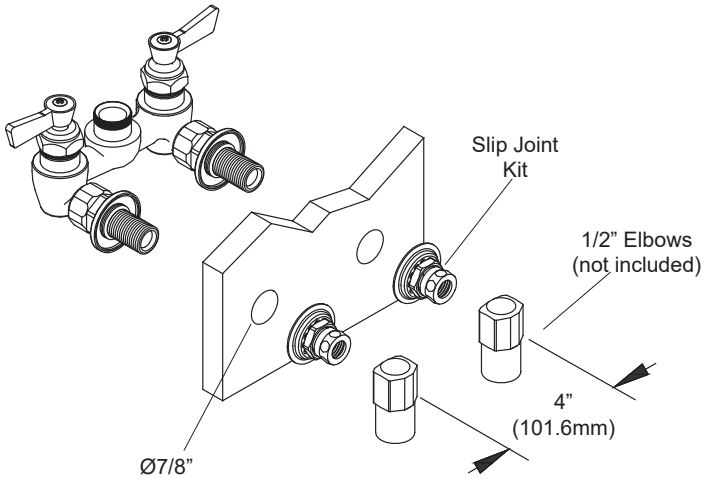

Step 3

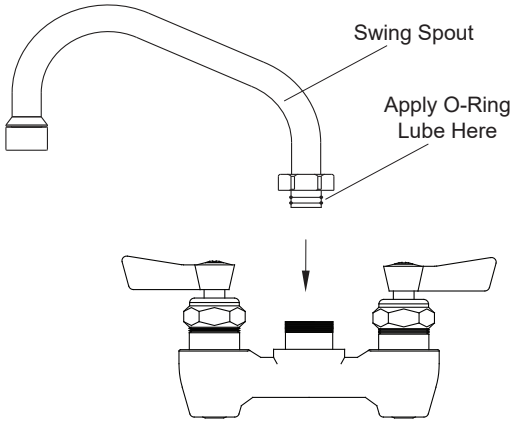

Step 4

