Replacement Parts for Wall Mount Faucets

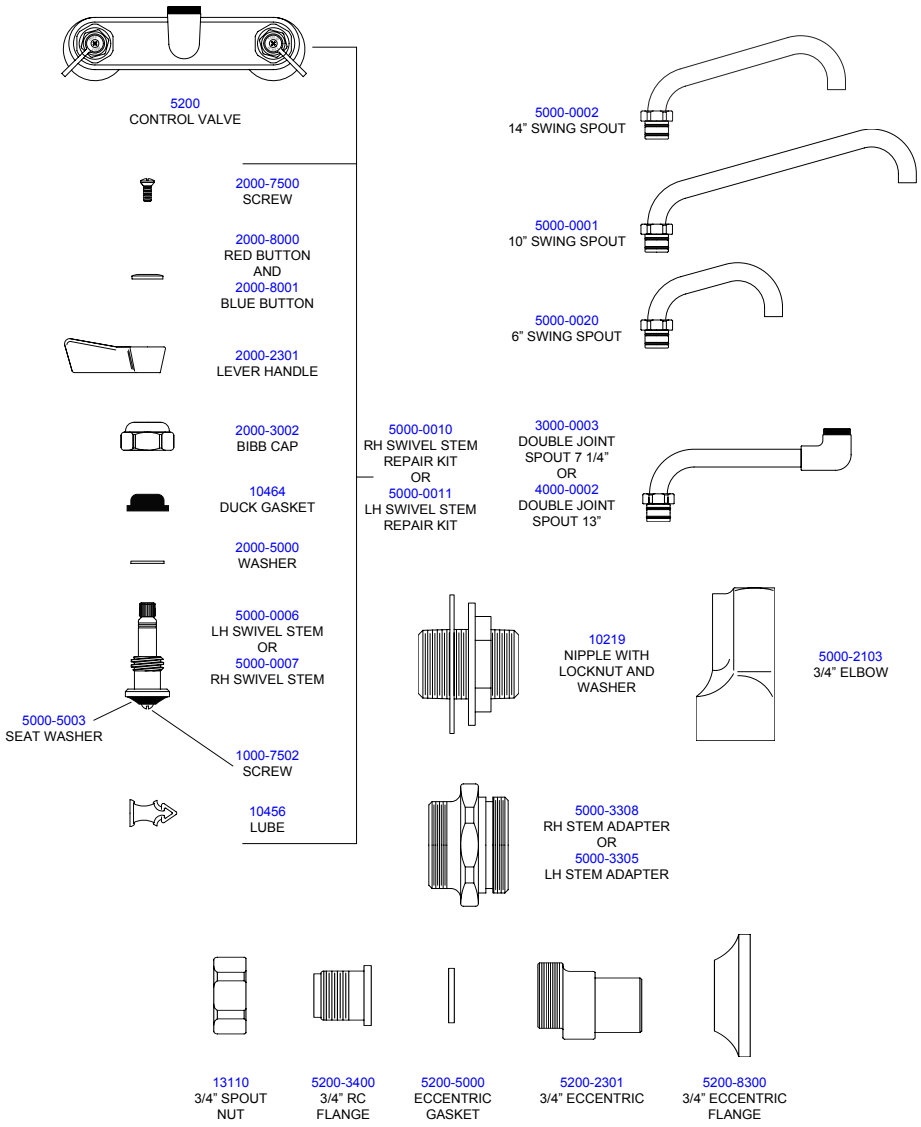

FISHER
MANFACTURING COMPANY
PO BOX 60, TULARE, CA 93275
(800)421-6162, FAX: (800)832-8238
www.fisher-mfg.com

PART NO. 39403

REV. A

FISHER MANUFACTURING COMPANY

3/4” Adjustable Wall Mount Faucet Product Installation Guide

Since 1936, Fisher Manufacturing Company has manufactured heavy-duty, high quality plumbing products and hardware specialties for the food service industry. For three generations, the Fisher family has adhered to a strict dedication of and overall value. When you install Fisher products… you install the best. Our hardware is manufactured with the standardization of internal mechanisms. All chrome plating is triple plated copper, nickel and chrome for durability. Every piece of equipment we make is rigorously tested in both our modern in-house testing center and in actual field situations under extreme conditions. Every detail is thoroughly checked. Before we make our products available to you, they pass each and every test. You get proven performance. Guaranteed.



Limited One Year Warranty

Fisher Manufacturing Company warrants its products and parts thereof (except as noted below) against defects in materials or workmanship for a period of one year after the date of original purchase. During this period Fisher Manufacturing Company will replace a defective product or part without charge to you, provided that the entire product is delivered to Fisher Manufacturing Company. All transportation and insurance charges for shipping the product to and from Fisher Manufacturing Company must be borne by you. Charges for transportation and insurance may, at the option of Fisher Manufacturing Company, be refunded depending upon our investigation of the warranty claim. This warranty does not cover external finish (except at date of original purchase) or labor costs not specifically authorized by Fisher Manufacturing Company.

A full and complete copy of our One Year limited warranty is available upon request.

WARNING:
Proposition 65 requires that we provide you with the following notice: “This product Contains A Chemical Known To The State Of California To Cause Birth Defects Or Other Reproductive Harm.”

#5212 - 3/4” Adjustable Wall Mount Faucet with 10” Swing Spout

#5214 - 3/4” Adjustable Wall Mount Faucet with 14” Swing Spout

KEEP THIS MANUAL FOR FUTURE REFERENCE

ANSI/A112.18.1M, ANSI/NSF 61.9

FISHER MANUFACTURING COMPANY - TOLL FREE: 800-421-6162 FAX: 800-832-8238

www.fisher-mfg.com

Installation Instructions for Wall Mount Faucets

BE SURE TO CHECK WITH YOUR LOCAL DEPARTMENT HAVING JURISDICTION REGARDING BACKFLOW PREVENTION

Installation Notes:

- Be sure to shut off water supply before beginning.
- Use pipe thread sealant such as PST on all threaded joints.
- Check the packaging for missing items BEFORE beginning installation. If items are missing, contact your supplier.

Tools Required for Installation

- Medium Sized Crescent Wrench
- Pipe Thread Sealant



Package Contents
The box should contain the following:



Control Valve Qty: 1	Swing Spout Length determined by model Qty: 1 Each spout includes two 5000-5001 o-rings	5200-5000 Eccentric Gasket Qty: 2	5200-2301 Eccentric Qty: 2	5200-8300 Flange Qty: 2	10456 Lube

Installation Instructions

1. Insert the eccentric gasket into the groove on the eccentric. Making sure gasket is in place, loosely mount the eccentric onto the control valve body. Press flange over the concentric until secure.
2. Mount control valve body to either a wall with male supply nipples, or a backsplash with nipples (not included). Be sure to use pipe thread sealant on the supply nipple threads. Adjust the eccentrics as needed in order to mount the control valve level. Once level, tighten the eccentrics. Attach elbows or supply lines as needed..
3. If installing a double joint spout, apply lube to the o-rings on the spout. Mount the double joint spout and tighten the nut onto the faucet spout outlet.
4. Apply lube to the o-rings on the swing spout. Mount the swing spout and tighten the swing spout nut onto the faucet spout outlet.
5. Turn on water supply and check for leaks.

Step 1

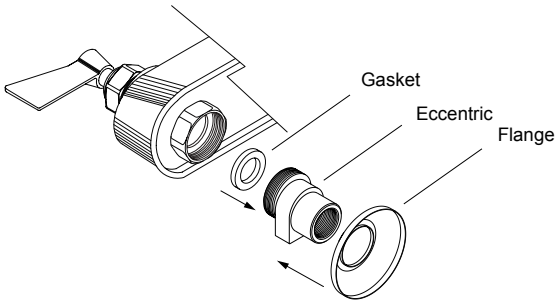

Installation Instructions Continued

Step 2

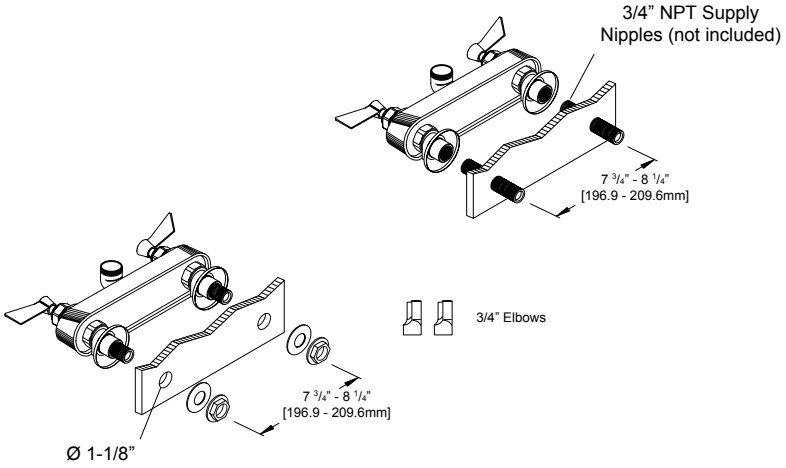

Step 3

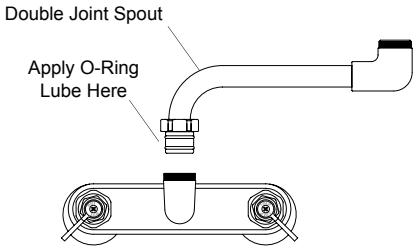

Step 4

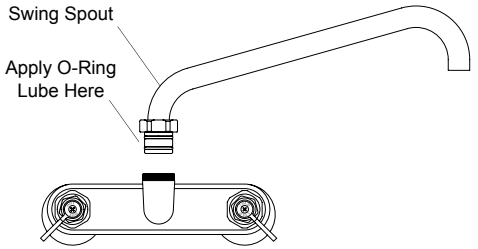

Step 5

