FISHER

FISHER MANUFACTURING COMPANY TOLL FREE: 800-421-6162 - FAX: 800-832-8238
customer@fisher-mfg.com - www.fisher-mfg.com

PRODUCT NAME:

3/4 FAUCET 8" ADJUSTABLE WALL & SPOUT

SPEC. FATB-KF-8AWLL

Customer/Wholesaler:	Date:	Job Name:	Model Specified:	Quantity:
Contracter:	Architect/Engineer:			

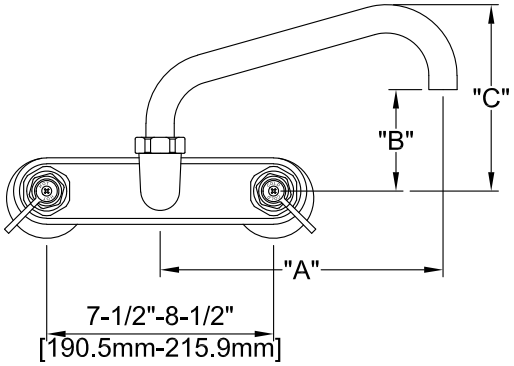

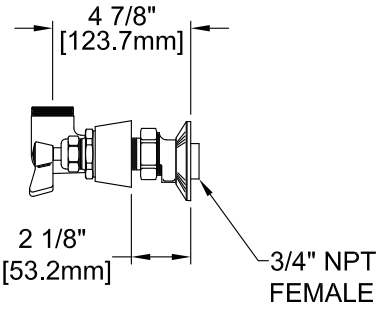

MODEL	DIM "A"	DIM "B"	DIM "C"
5212	10" [254.0mm]	3-1/2" [88.9mm]	6-5/8" [168.3mm]
5214	14" [355.6mm]	4-5/8" [117.5mm]	7-3/4" [196.9mm]

ROUGH-IN:

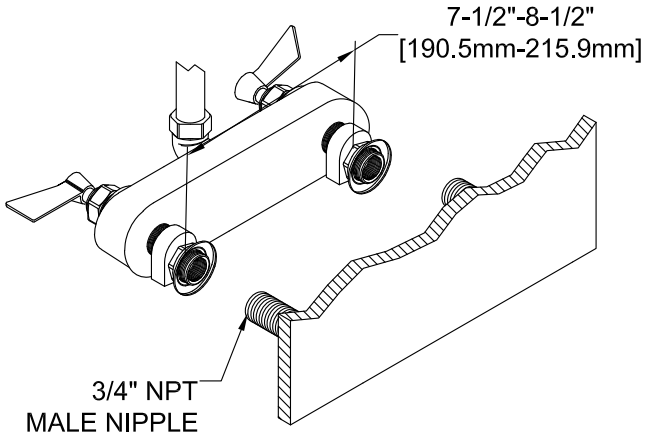

MODEL:

- ☐ 5212 3/4 FAUCET 8AWLH 10SS
- ☐ 5214 3/4 FAUCET 8AWLH 14SS

OPTIONS OR MODIFICATIONS:

- ☐ OTHER _____

FEATURES:

* ECCENTRICS ADJUST FROM 7-1/2" TO 8-1/2"
* SWIVELING SEAT DISKS
* HOT SIDE STEM - RIGHT HAND
* COLD SIDE STEM - LEFT HAND
* STAINLESS STEEL SEATS
* STAINLESS STEEL SEAT SCREWS
* STAINLESS STEEL HANDLE SCREWS

SYSTEM LIMITS
* TEMP: 40°F MIN. TO 160°F MAX.
* PRESSURE 200 PSI MAX. STATIC
* 37 GPM AT 80 PSI (140.0 L/min @550 KPa)

SHIPPING WEIGHT
* 9.5 LBS

PRODUCT COMPLIANCE:
* ASME A112.18.1 / CSA B125.1
* NSF 61 - Section 9
* NSF 372 (Low Lead Content)

FISHER MANUFACTURING COMPANY TOLL FREE: 800-421-6162 - FAX: 800-832-8238
customer@fisher-mfg.com - www.fisher-mfg.com

PRODUCT NAME:

3/4 FAUCET 8" ADJUSTABLE WALL & SPOUT

SPEC. FATB-KF-8AWLL

Replacement Parts for 3/4” Wall Mount Faucets

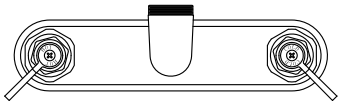

5200
CONTROL VALVE



2000-7500
SCREW

2000-8000
RED BUTTON
AND
2000-8001
BLUE BUTTON



LEVER HANDLE

2000-0002
HANDLE LEVER KIT



2000-3002
BIBB CAP



73657
DUCK GASKET

2000-5000
WASHER

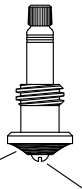

5000-0006
LH SWIVEL
STEM
OR
5000-0007
RH SWIVEL
STEM

73550
SEAT WASHER

1000-7502
SCREW



73521
LUBE

5000-0010
RH SWIVEL
STEM REPAIR
KIT
OR
5000-0011
LH SWIVEL STEM

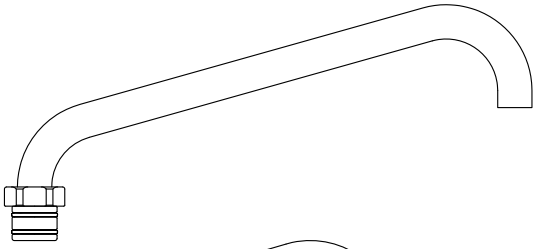

5000-0002
14” SWING SPOUT

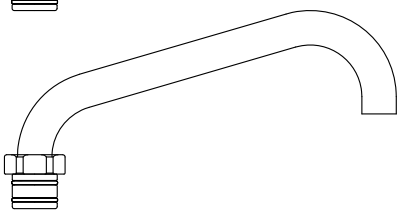

5000-0001
10” SWING SPOUT

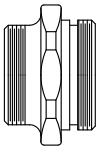

73570
rh stem adapter
or
73569
lh stem adapter



73477
HEX NUT



76899
ADAPTER
FLANGE

73547
ECCENTERIC
GASKET

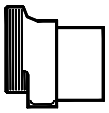

73548
ECCENTERIC



73549
FLANGE

Drawn:	DF	Checked:	EM	Approved:	DF	Date:	12/21/20	Sheet:	2 of 2