Replacement Parts for Pre-Rinse Units

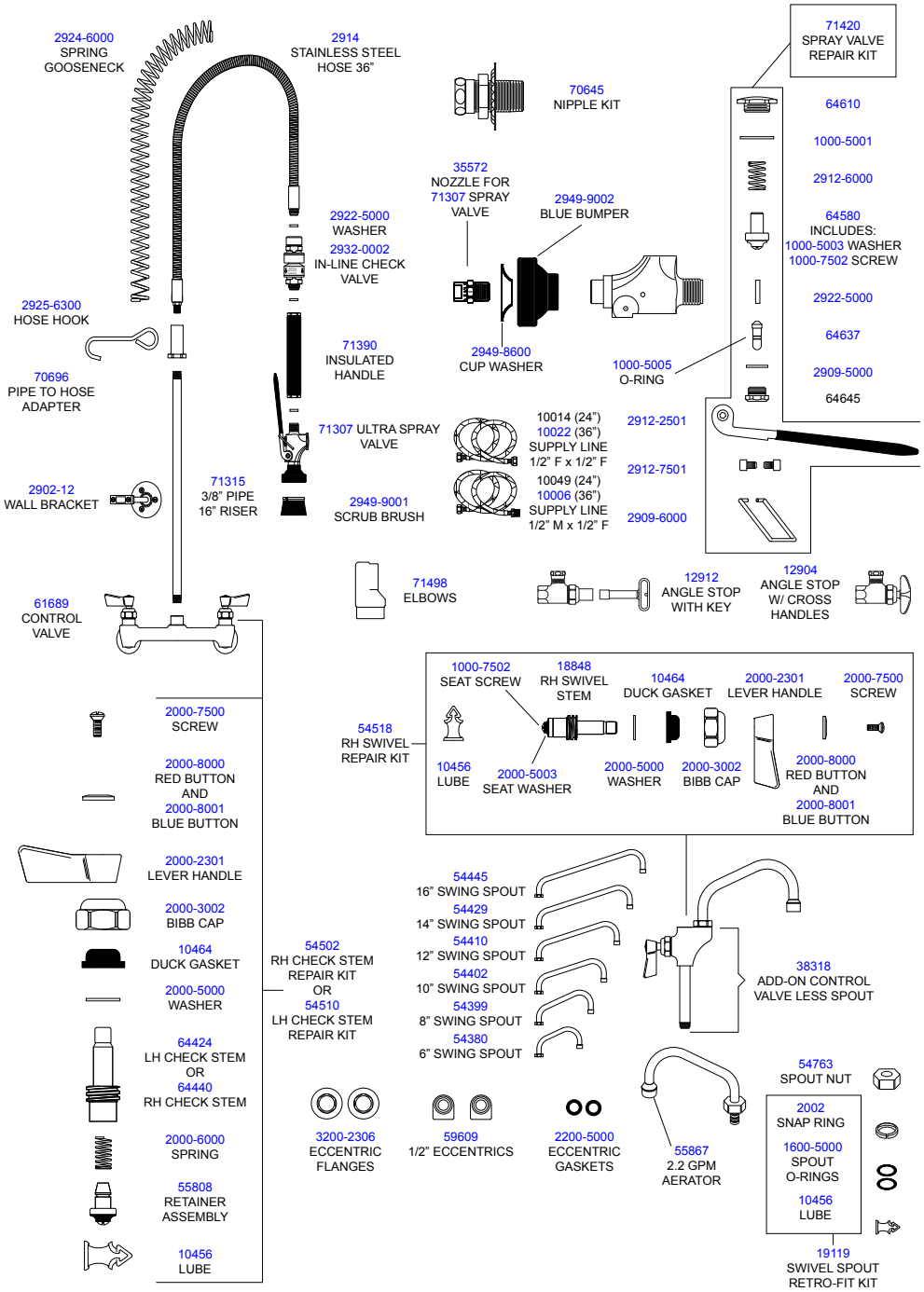

PART NO. 41734

FISHER MANUFACTURING COMPANY

Stainless Steel 8" Adjustable Wall Pre-Rinse Unit Product Installation Guide

Since 1936, Fisher Manufacturing Company has manufactured heavy-duty, high quality plumbing products and hardware specialties for the food service industry. For three generations, the Fisher family has adhered to a strict dedication of overall value. When you install Fisher products… you install the best. Our hardware is manufactured with the standardization of internal mechanisms. Every piece of equipment we make is rigorously tested in both our modern in-house testing center and in actual field situations under extreme conditions. Every detail is thoroughly checked. Before we make our products available to you, they pass each and every test. You get proven performance. Guaranteed.

Limited One Year Warranty

Fisher Manufacturing Company warrants its products and parts thereof (except as noted below) against defects in materials or workmanship for a period of one year after the date of original purchase. During this period Fisher Manufacturing Company will replace a defective product or part without charge to you, provided that the entire product is delivered to Fisher Manufacturing Company. All transportation and insurance charges for shipping the product to and from Fisher Manufacturing Company must be borne by you. Charges for transportation and insurance may, at the option of Fisher Manufacturing Company, be refunded depending upon our investigation of the warranty claim. This warranty does not cover external finish (except at date of original purchase) or labor costs not specifically authorized by Fisher Manufacturing Company.

A full and complete copy of our One Year limited warranty is available upon request.

WARNING:
Proposition 65 requires that we provide you with the following notice: "This product Contains A Chemical Known To The State Of California To Cause Birth Defects Or Other Reproductive Harm."



#53430 **-** Stainless Steel Pre-Rinse, Spring Style 8" Adjustable Wall Control Valve, 21" Riser, 36" Hose & Spray Valve with Lever Handles

#74012 **-** Stainless Steel Pre-Rinse, Spring Style 8" Adjustable Wall Control Valve, 21" Riser, 36" Hose & Spray Valve with Wrist Handles

KEEP THIS MANUAL FOR FUTURE REFERENCE

ANSI/A112.18.1M, ANSI/NSF 61.9

FISHER MANUFACTURING COMPANY, TOLL FREE: 800-421-6162, FAX:800-832-8238

www.noleadfaucet.com

BE SURE TO CHECK WITH YOUR LOCAL DEPARTMENT HAVING JURISDICTION REGARDING BACKFLOW PREVENTION

Installation Notes:

- Be sure to shut off water supply before beginning.
- Use pipe thread sealant such as PST on all threaded joints.
- Check the packaging for missing items BEFORE beginning installation. If items are missing, contact your supplier.

Tools Required for Installation

- Medium Sized Crescent Wrenches
- Pipe Thread Sealant
- Phillips Screwdriver
- 7/16" Drill Bit
- 1/8" Allen Wrench

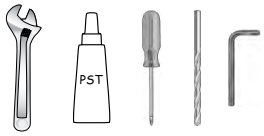

Installation Instructions

1. Insert the gasket into the groove on the eccentric. Making sure gasket is in place, loosely mount the eccentric and flange onto the control valve body.
2. Mount the small riser to the control valve body using thread sealant. Screw the add-on faucet to the other end of the small riser, again using thread sealant.
3. Mount control valve body to either a wall with male supply nipples, or a backsplash with nipples (not included). Be sure to use pipe thread sealant on the supply nipple threads. Adjust the eccentrics as needed in order to mount the control valve level. Once level, tighten the eccentrics.
4. Mount the pipe to hose adapter to the enclosed riser using thread sealant. Mount the other end of the riser to the female outlet of the add-on body.
5. If no wall bracket is to be installed, proceed to Step 6, otherwise do the following:
   a. Locate and drill a Ø7/16" hole in the wall directly behind and about 3/4 the way up the riser pipe.
   b. Loosely attach the front and back of the pipe clamp onto the riser pipe.
   c. Hold the wall bracket flange against the wall, centered with the hole. Use the wall screws and a screw driver to mount the flange to the wall.
   d. Slide part, but not all, of the wall bracket rod non-threaded end first through the center hole of the flange and into the wall.
   e. Align the rod with the pipe clamp and thread the rod into the pipe clamp. Be sure the rod is level by adjusting the pipe clamp position.
   f. Once level, fix the rod in place by tightening both the set screw located in the flange and the pipe clamp screws.
6. Slip the hose hook over the pipe to hose adapter. Using thread sealant and a crescent wrench, thread the SS hose into the pipe to hose adapter.
7. Install gooseneck spring by slipping SS hose through the spring. Spring will fit over adapter which holds it in an upright position. Note: Be sure spring is installed as shown. DO NOT INSTALL SHORT BEND DOWN.

Step 1

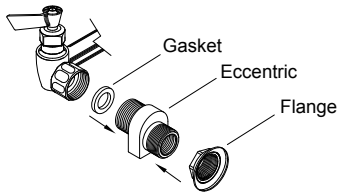

Step 2

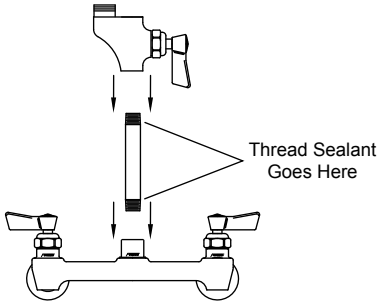

Step 3

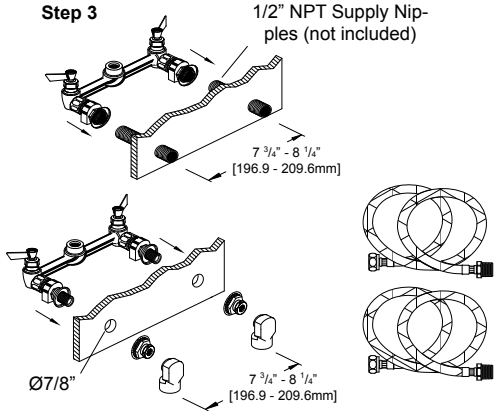

Installation Instructions Continued

8. Fit one of the handle gaskets inside the outlet of the insulated handle and mount the spray valve onto it.
9. Fit the other handle gasket inside the inlet of the insulated handle and mount the handle onto the SS hose. If installing backflow preventer, attach it between the SS hose and insulated handle. Be sure that gaskets are used on both sides of the backflow preventer
10. If installing a brush, do so by pressing brush into the bumper of the spray valve until secure.
11. To install swing spout to add-on faucet, apply o-ring lube to the o-rings on the swing spout. Make sure the white snap ring is in place before mounting the swing spout. Mount the swing spout and tighten the swing spout nut onto the add-on faucet spout outlet.
12. Turn on water supply and check for leaks.

Step 4

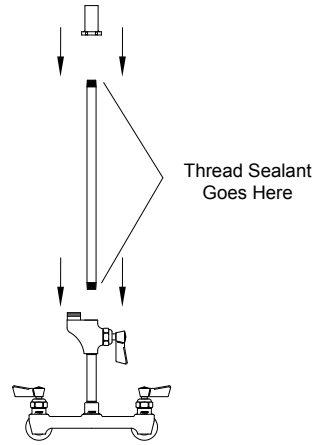

Step 5

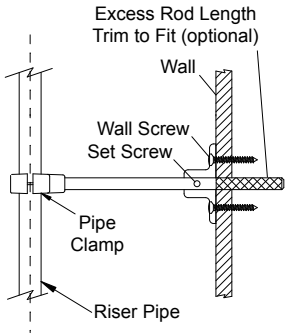

Step 6

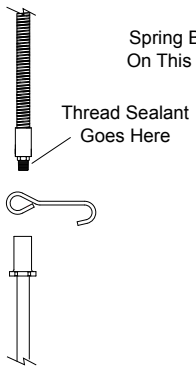

Step 7

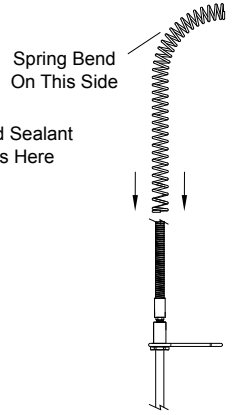

Step 8

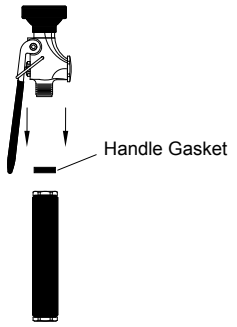

Step 9

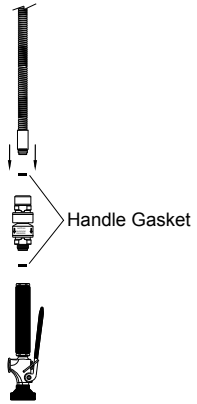

Step 10

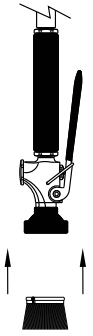

Step 11

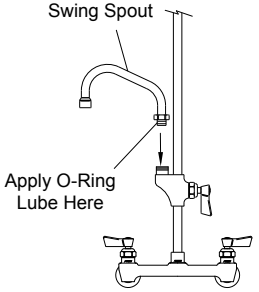

Step 12

