Replacement Parts for Sevice Sinks

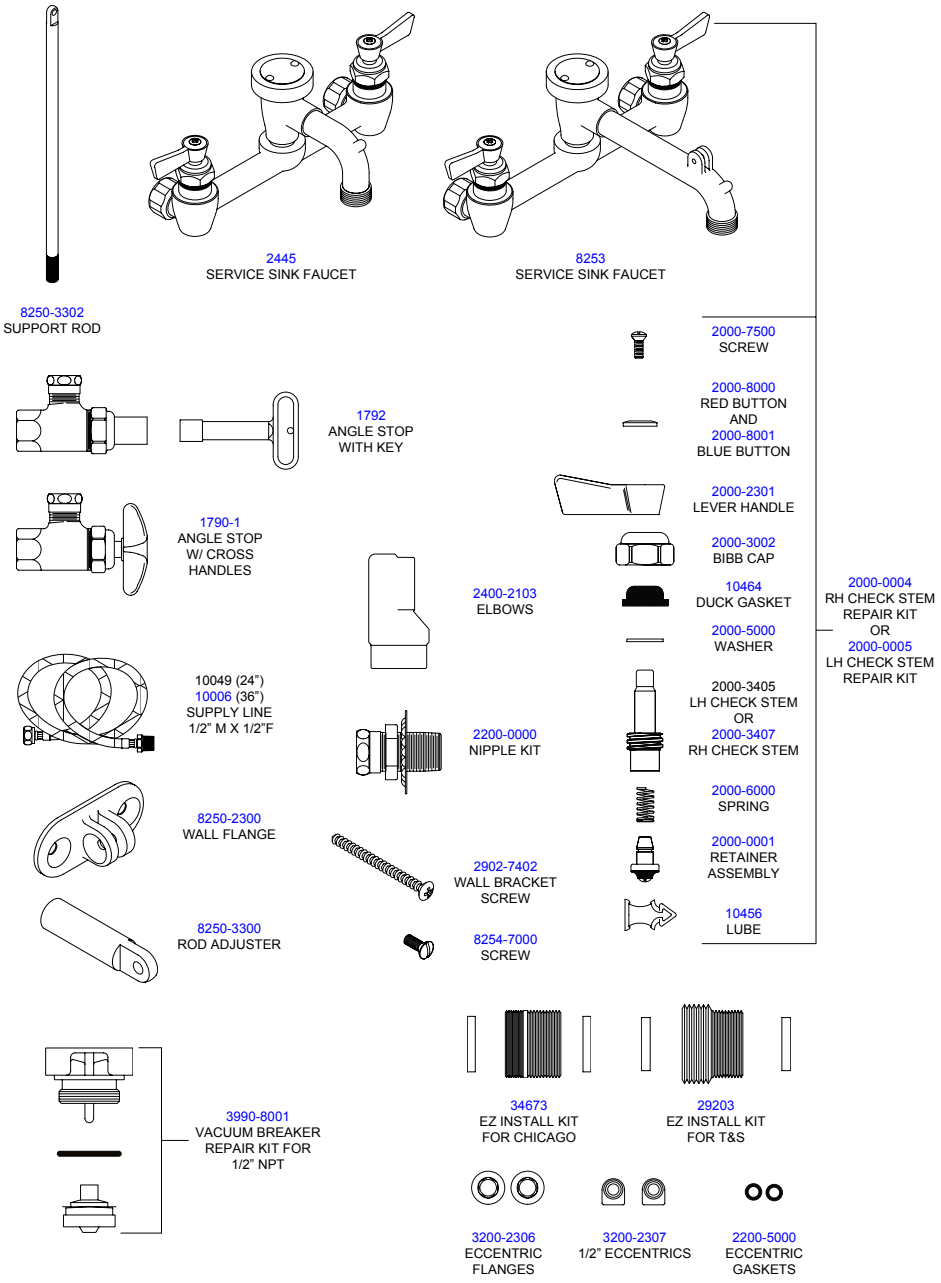

FISHER
MANFACTURING COMPANY
PO BOX 60, TULARE, CA 93275
(800)421-6162, FAX: (800)832-8238
www.fisher-mfg.com

PART NO. 40665

REV. A

FISHER
FISHER MANUFACTURING COMPANY

Service Sink Faucet
Product Installation Guide

Since 1936, Fisher Manufacturing Company has manufactured heavy-duty, high quality plumbing products and hardware specialties for the food service industry. For three generations, the Fisher family has adhered to a strict dedication of and overall value. When you install Fisher products… you install the best. Our hardware is manufactured with the standardization of internal mechanisms. All chrome plating is triple plated copper, nickel and chrome for durability. Every piece of equipment we make is rigorously tested in both our modern in-house testing center and in actual field situations under extreme conditions. Every detail is thoroughly checked. Before we make our products available to you, they pass each and every test. You get proven performance. Guaranteed.

Limited One Year Warranty

Fisher Manufacturing Company warrants its products and parts thereof (except as noted below) against defects in materials or workmanship for a period of one year after the date of original purchase. During this period Fisher Manufacturing Company will replace a defective product or part without charge to you, provided that the entire product is delivered to Fisher Manufacturing Company. All transportation and insurance charges for shipping the product to and from Fisher Manufacturing Company must be borne by you. Charges for transportation and insurance may, at the option of Fisher Manufacturing Company, be refunded depending upon our investigation of the warranty claim. This warranty does not cover external finish (except at date of original purchase) or labor costs not specifically authorized by Fisher Manufacturing Company.

A full and complete copy of our One Year limited warranty is available upon request.

WARNING:
Proposition 65 requires that we provide you with the following notice: "This product Contains A Chemical Known To The State Of California To Cause Birth Defects Or Other Reproductive Harm."



#8253 - Service Sink Faucet: Long Spout with Wall Bracket, Vacuum Breaker, Polished Chrome

#2445 - Service Sink Faucet: Short Spout, Vacuum Breaker, Polished Chrome

KEEP THIS MANUAL FOR FUTURE REFERENCE

ANSI/A112.18.1M, ANSI/NSF 61.9

FISHER MANUFACTURING COMPANY - TOLL FREE: 800-421-6162 FAX: 800-832-8238

www.fisher-mfg.com

Installation Instructions for Service Sinks

BE SURE TO CHECK WITH YOUR LOCAL DEPARTMENT HAVING JURISDICTION REGARDING BACKFLOW PREVENTION

Installation Notes:

- Be sure to shut off water supply before beginning.
- Use pipe thread sealant such as PST on all threaded joints.
- Check the packaging for missing items BEFORE beginning installation. If items are missing, contact your supplier.

Tools Required for Installation

- Medium Sized Crescent Wrench
- Pipe Thread Sealant
- Phillips Screwdriver
- 7/16" Drill Bit

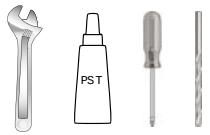

Installation Instructions

READ BEFORE INSTALLATION:

Before removing any existing T&S, Chicago, CHG, or Dormont hardware, read the instructions on next page labeled "EZ Install Adapter Instructions"

1. Insert the eccentric gasket into the groove on the eccentric. Making sure gasket is in place, loosely mount the eccentric and flange onto the control valve body.
2. Mount control valve body to either a wall with male supply nipples, or a backsplash with nipples (not included). Be sure to use pipe thread sealant on the supply nipple threads. Adjust the eccentrics as needed in order to mount the control valve level. Once level, tighten the eccentrics.
3. To install the wall bracket, first attach the rod adjuster to the rod. Do not completely screw the adjuster onto the rod in case some future adjustment is necessary. Using one of the small screws, attach the rod adjuster to the faucet spout. Attach the other end of the rod to the wall bracket flange using the other small screw. To complete wall bracket installation, attach the flange to the wall or backsplash using the longer wall screws.

Step 1

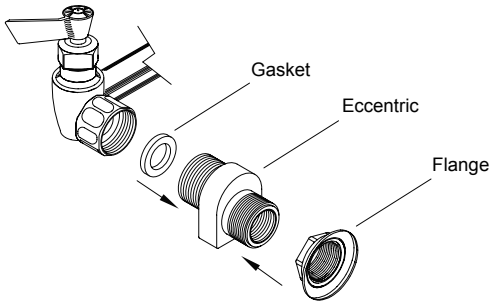

Step 2

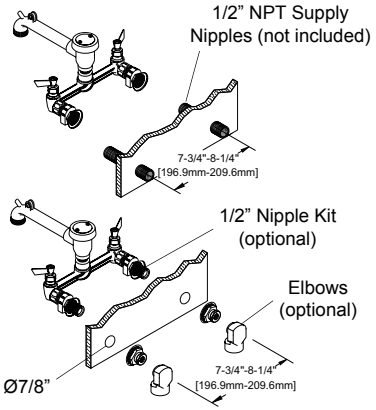

Step 3

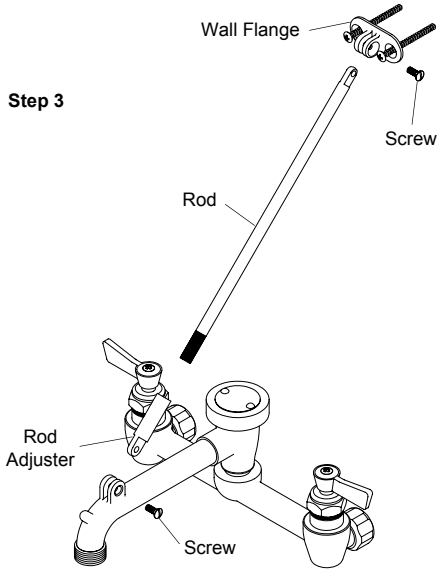

Installation Instructions Continued

EZ Install Adapter Instructions

If replacing T&S, Chicago, CHG, or Dormont Faucets, use the EZ Install Adapter that is included with your Fisher faucet to simplify installation.

1. Remove existing faucet by unthreading connecting nut.
2. Place new washer into fitting. Thread in Fisher EZ Install Adapter.
3. Using another new washer, mount the new Fisher faucet onto the EZ Install Adapter and tighten. Discard the eccentrics supplied with new Fisher faucets.

Step 1

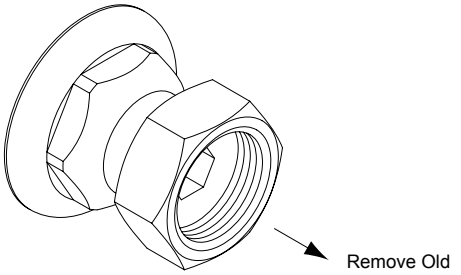

Step 2

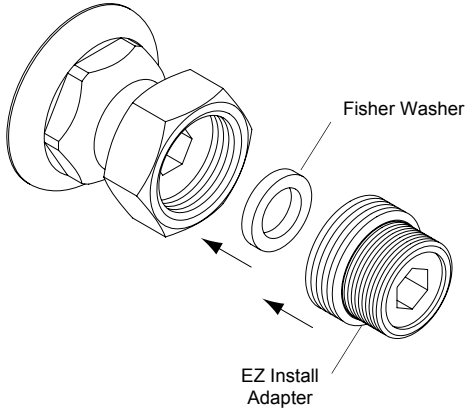

Step 3

