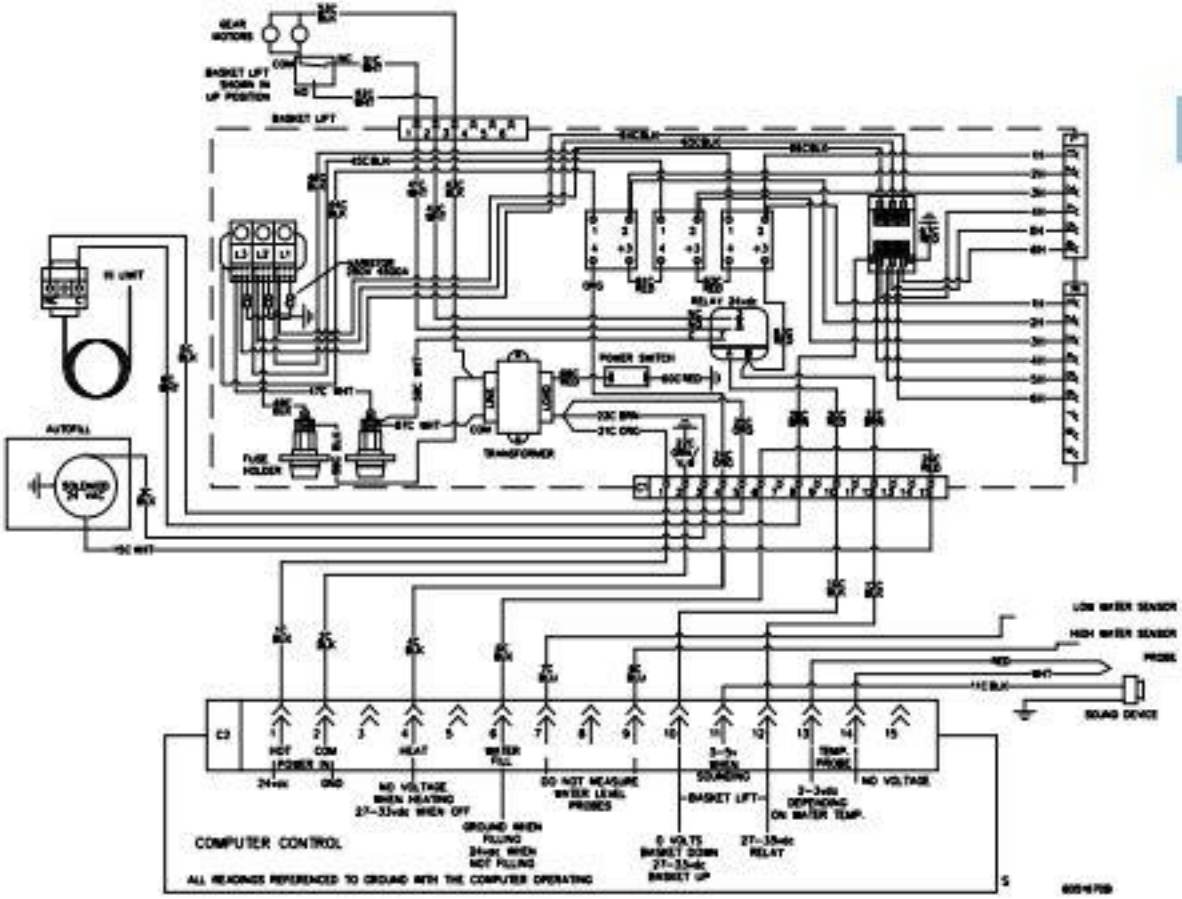
REAR MOTORS
BASKET LIFT SHOWN IN UP POSITION
BASKET LIFT
RELAY 24vdc
POWER SWITCH
TRANSFORMER
FUSE HOLDER
AUTOFILL
LOW WATER SENSOR
HIGH WATER SENSOR
PROBE
SOUND DEVICE
HOT (POWER IN) 24vac
COM GND
HEAT
WATER FILL
DO NOT MEASURE WATER LEVEL PROBES
SOUNDING
TEMP. PROBE
NO VOLTAGE
NO VOLTAGE WHEN HEATING 27-33vdc WHEN OFF
GROUND WHEN FILLING 24vac WHEN NOT FILLING
0 VOLTS BASKET DOWN 27-33vdc BASKET UP
27-33vdc RELAY
3-3vdc DEPENDING ON WATER TEMP.
COMPUTER CONTROL
ALL READINGS REFERENCED TO GROUND WITH THE COMPUTER OPERATING

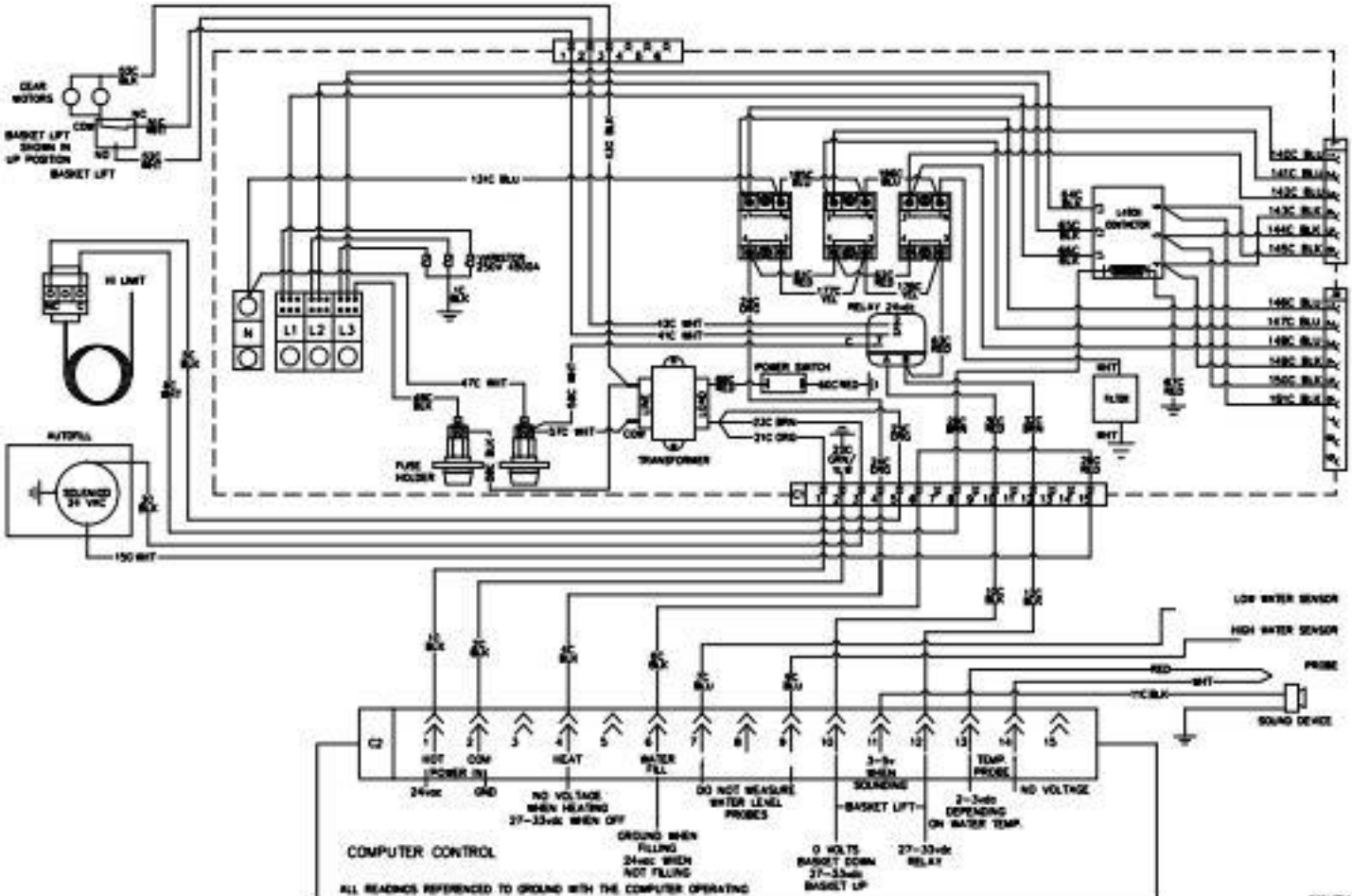
GEAR MOTORS
BASKET LIFT SHOWN IN UP POSITION
BASKET LIFT
COM
NC
NO
12C BLU
HI LIMIT
AUTOFILL
SOLENOID 24 VAC
150 WHT
L1
L2
L3
N
47C WHT
FUSE HOLDER
TRANSFORMER
POWER SWITCH
RELAY 24vac
LIQUID CONTACTOR
FUSE
LOW WATER SENSOR
HIGH WATER SENSOR
PROBE
RED
WHT
SOUND DEVICE
C2
HOT POWER IN
24vdc
COM
GND
HEAT
WATER FILL
3-9v WHEN SOUNDING
TEMP PROBE
NO VOLTAGE
NO VOLTAGE WHEN HEATING 27-33vdc WHEN OFF
DO NOT MEASURE WATER LEVEL PROBES
BASKET LIFT
2-3vdc DEPENDING ON WATER TEMP.
GROUND WHEN FILLING 24vdc WHEN NOT FILLING
0 VOLTS BASKET DOWN 27-33vdc BASKET UP
27-33vdc RELAY
COMPUTER CONTROL
ALL READINGS REFERENCED TO GROUND WITH THE COMPUTER OPERATING

200V 6kW ELEMENT			
VOLTS	PHASE	WATTS	AMPS/LINE
200	SINGLE	7400	37
200	3Ø 1-WIRE	7400	21.3
200/207	3Ø 1-WIRE	7400	20.5
208	SINGLE	6000	29
	3Ø 1-WIRE	6000	16.6

240V 6kW ELEMENT			
VOLTS	PHASE	WATTS	AMPS/LINE
240	SINGLE	6000	25
240	3Ø 1-WIRE	6000	14.4
240/416	3Ø 1-WIRE	6000	8.3
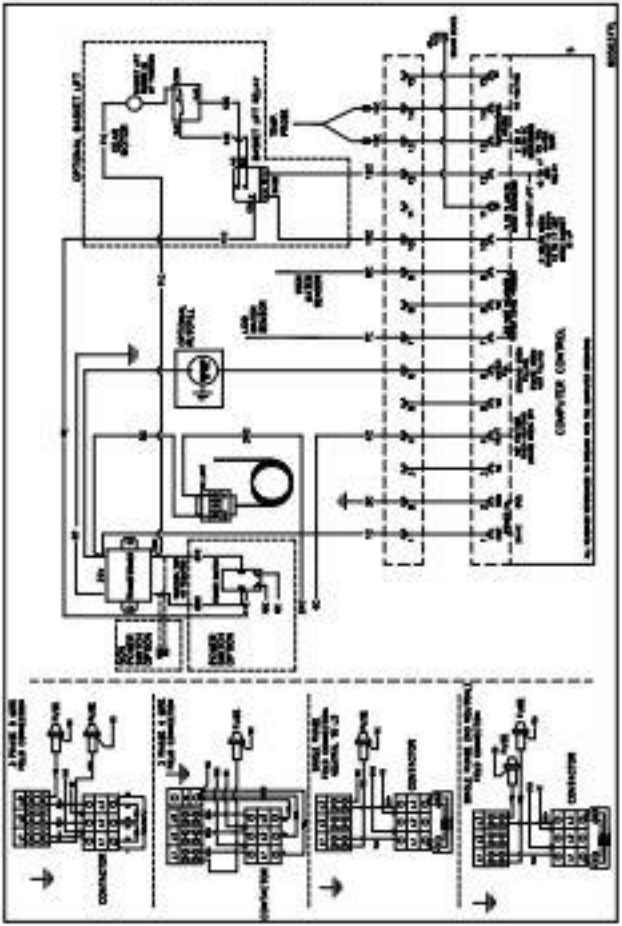
230V 6kW ELEMENT			
VOLTS	PHASE	WATTS	AMPS/LINE
230	SINGLE	7300	31
230	3Ø 1-WIRE	7300	18.3
230/380	3Ø 1-WIRE	7300	10.5
230	SINGLE	6000	26
230	3Ø 1-WIRE	6000	15.1
230/400	3Ø 1-WIRE	6000	8.7