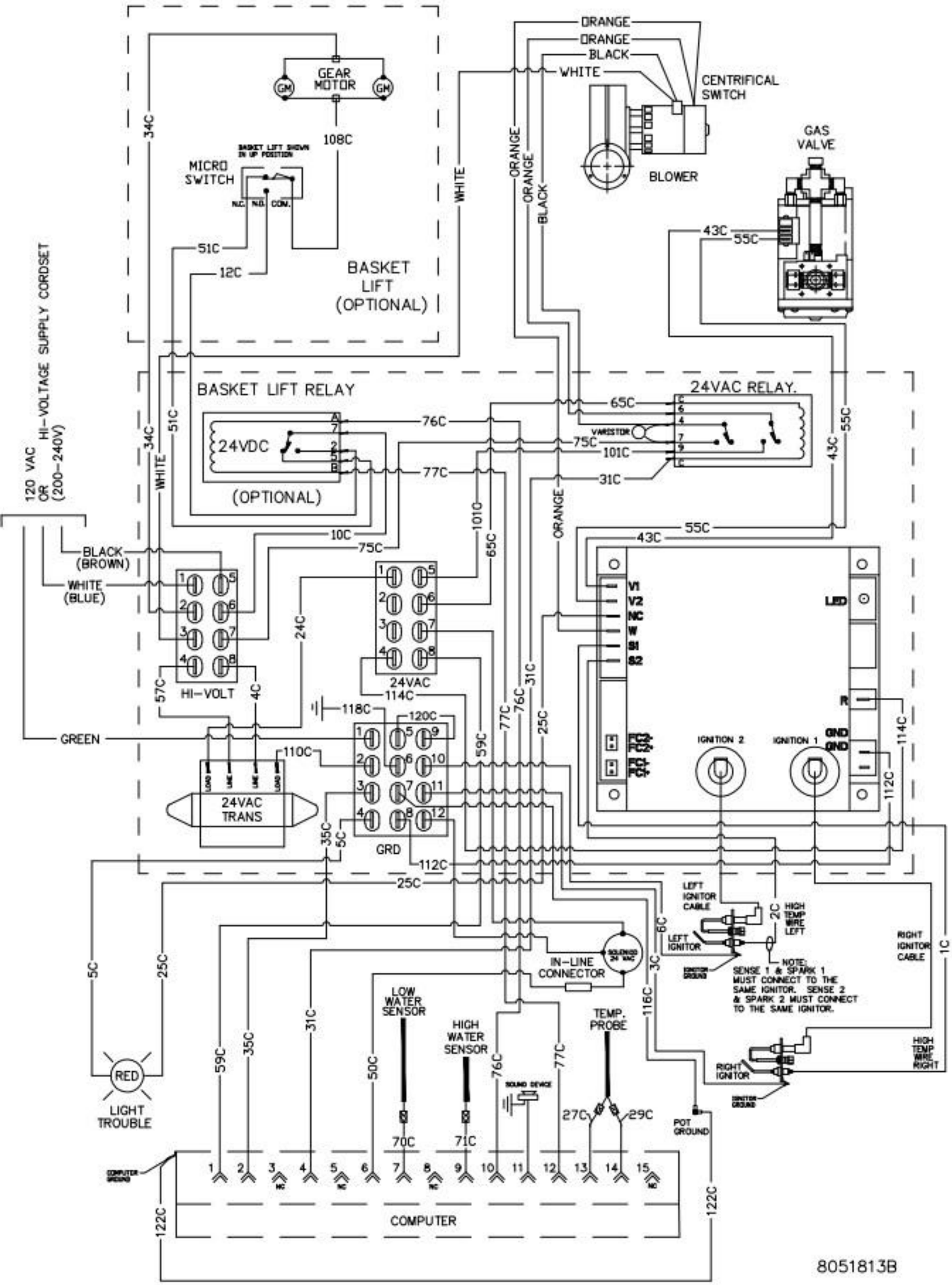
GEAR MOTOR
GM
GM
108C
34C
MICRO SWITCH
BASKET LIFT SHOWN IN UP POSITION
N.C. N.O. COM.
51C
12C
BASKET LIFT (OPTIONAL)
WHITE
ORANGE
ORANGE
BLACK
WHITE
CENTRIFICAL SWITCH
BLOWER
GAS VALVE
43C
55C
120 VAC OR (200-240V)
HI-VOLTAGE SUPPLY CORDSET
BASKET LIFT RELAY
24VDC
(OPTIONAL)
76C
77C
24VAC RELAY.
VARISTOR
65C
75C
101C
31C
10C
75C
BLACK (BROWN)
WHITE (BLUE)
HI-VOLT
57C
4C
24VAC
114C
118C
120C
110C
GREEN
24VAC TRANS
LOAD
LINE
LINE
LOAD
GRD
35C
5C
112C
25C
V1
V2
NC
W
S1
S2
LED
R
GND
GND
IGNITION 2
IGNITION 1
LEFT IGNITOR CABLE
LEFT IGNITOR
IGNITOR GROUND
2C
HIGH TEMP WIRE LEFT
NOTE: SENSE 1 & SPARK 1 MUST CONNECT TO THE SAME IGNITOR. SENSE 2 & SPARK 2 MUST CONNECT TO THE SAME IGNITOR.
RIGHT IGNITOR CABLE
1C
HIGH TEMP WIRE RIGHT
RIGHT IGNITOR
IN-LINE CONNECTOR
SOLENOID 24 VAC
6C
3C
116C
LOW WATER SENSOR
HIGH WATER SENSOR
TEMP. PROBE
SOUND DEVICE
27C
29C
POT GROUND
RED
LIGHT TROUBLE
70C
71C
COMPUTER GROUND
COMPUTER
122C
59C
35C
31C
50C
76C
77C
25C
6C
116C
114C
112C

8051813B

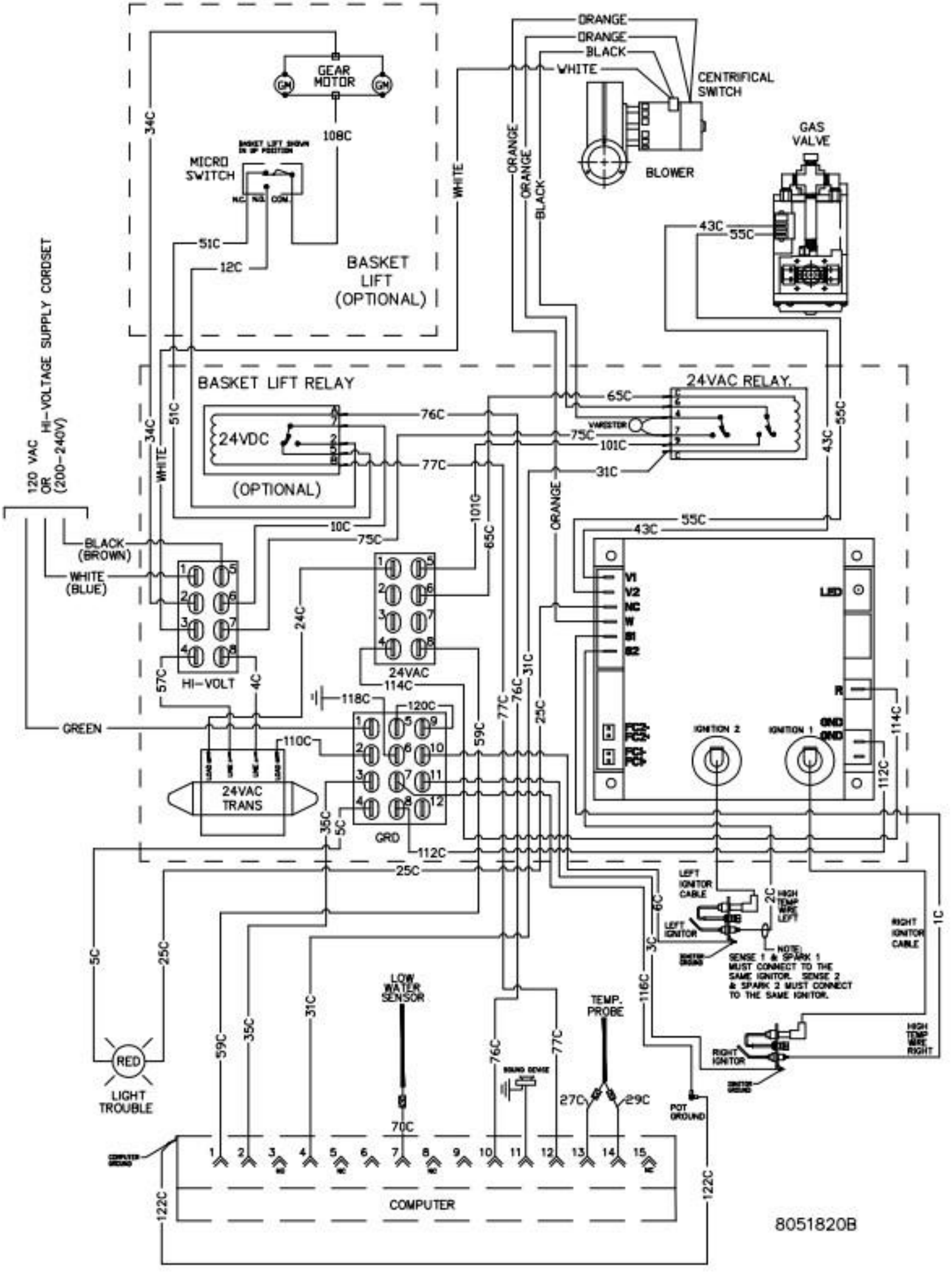
GEAR MOTOR
GM
GM
108C
34C
MICRO SWITCH
N.C.
N.O.
COM.
51C
12C
BASKET LIFT (OPTIONAL)
WHITE
ORANGE
ORANGE
BLACK
WHITE
CENTRIFICAL SWITCH
BLOWER
GAS VALVE
43C
55C
120 VAC OR (200-240V)
HI-VOLTAGE SUPPLY CORDSET
BASKET LIFT RELAY
24VDC
(OPTIONAL)
76C
77C
10C
75C
101G
65C
24VAC RELAY
65C
75C
101C
31C
VARISTOR
ORANGE
55C
43C
BLACK (BROWN)
WHITE (BLUE)
HI-VOLT
24VAC
24C
57C
4C
114C
118C
120C
GREEN
110C
24VAC TRANS
GRD
59C
77C
76C
31C
25C
35C
5C
112C
V1
V2
NC
W
B1
B2
LED
R
GND
GND
IGNITION 2
IGNITION 1
114C
112C
LEFT IGNITOR CABLE
LEFT IGNITOR
IGNITOR GROUND
HIGH TEMP WIRE LEFT
2C
6C
3C
116C
NOTE: SENSE 1 & SPARK 1 MUST CONNECT TO THE SAME IGNITOR. SENSE 2 & SPARK 2 MUST CONNECT TO THE SAME IGNITOR.
RIGHT IGNITOR CABLE
1C
HIGH TEMP WIRE RIGHT
RIGHT IGNITOR
IGNITOR GROUND
RED
LIGHT TROUBLE
LOW WATER SENSOR
70C
SOUND DEVICE
TEMP. PROBE
27C
29C
POT GROUND
COMPUTER GROUND
COMPUTER
122C
8051820B

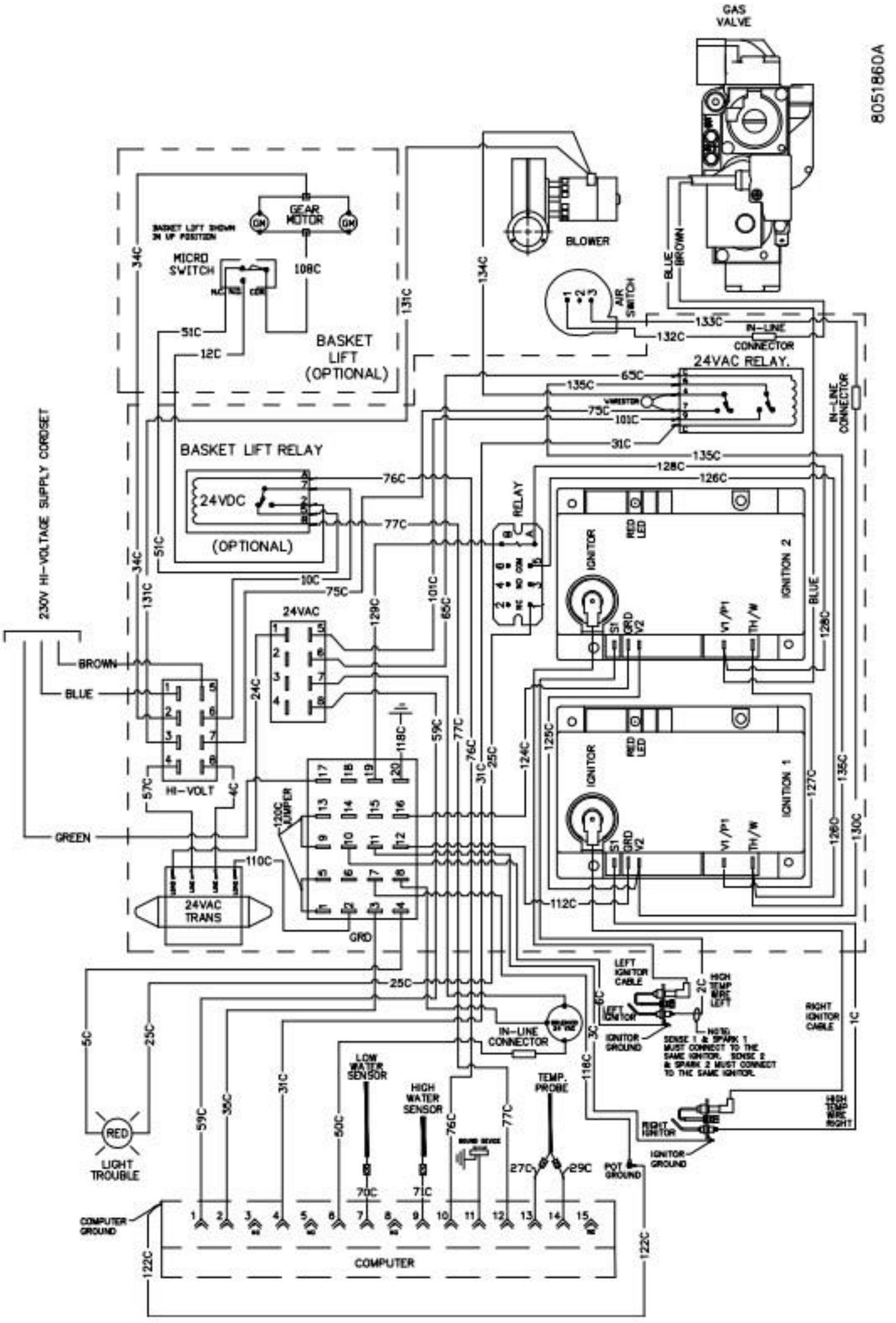
8051860A
GAS VALVE
BLOWER
AIR SWITCH
BLUE
BROWN
133C
132C
IN-LINE CONNECTOR
24VAC RELAY.
65C
135C
75C
101C
31C
128C
126C
IN-LINE CONNECTOR
GEAR MOTOR
BASKET LIFT SHOWN IN UP POSITION
MICRO SWITCH
108C
34C
131C
134C
51C
12C
BASKET LIFT (OPTIONAL)
BASKET LIFT RELAY
24VDC
(OPTIONAL)
76C
77C
10C
75C
129C
101C
65C
RELAY
IGNITOR
RED LED
IGNITION 2
S1
GRD
V2
V1/P1
TH/W
IGNITION 1
230V HI-VOLTAGE SUPPLY CORDSET
BROWN
BLUE
GREEN
24VAC
HI-VOLT
24C
57C
4C
118C
59C
25C
124C
125C
127C
135C
126C
130C
120C JUMPER
110C
24VAC TRANS
GRD
112C
LEFT IGNITOR CABLE
HIGH TEMP WIRE LEFT
LEFT IGNITOR
IGNITOR GROUND
NOTE: SENSE 1 & SPARK 1 MUST CONNECT TO THE SAME IGNITOR. SENSE 2 & SPARK 2 MUST CONNECT TO THE SAME IGNITOR.
RIGHT IGNITOR CABLE
HIGH TEMP WIRE RIGHT
RIGHT IGNITOR
IGNITOR GROUND
IN-LINE CONNECTOR
LOW WATER SENSOR
HIGH WATER SENSOR
TEMP. PROBE
50C
70C
71C
76C
77C
27C
29C
POT GROUND
5C
35C
31C
118C
6C
3C
2C
1C
RED
LIGHT TROUBLE
COMPUTER GROUND
COMPUTER
122C