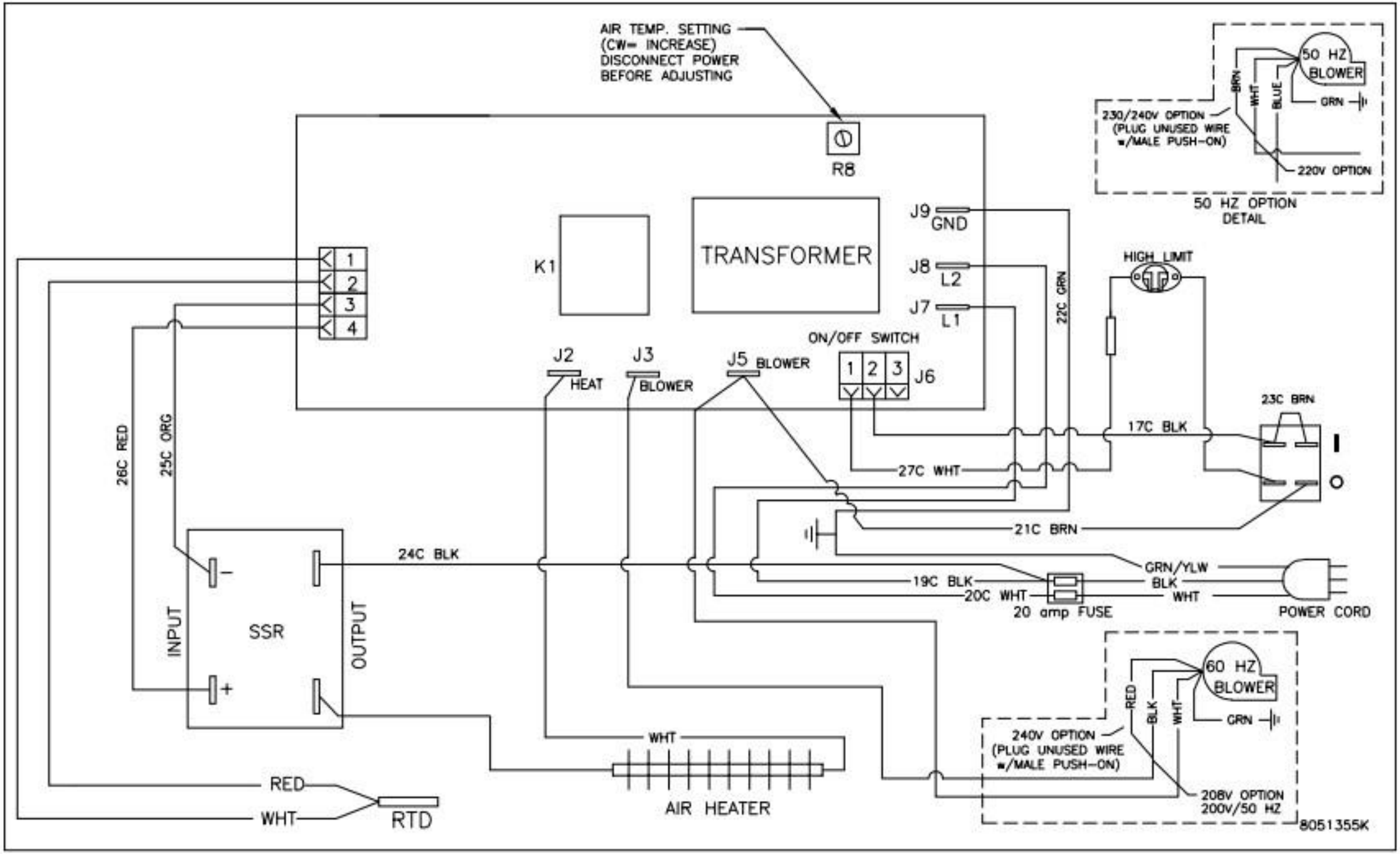
AIR TEMP. SETTING
(CW= INCREASE)
DISCONNECT POWER
BEFORE ADJUSTING
R8
50 HZ
BLOWER
BRN
WHT
BLUE
GRN
230/240V OPTION
(PLUG UNUSED WIRE
w/MALE PUSH-ON)
220V OPTION
50 HZ OPTION
DETAIL
J9
GND
J8
L2
J7
L1
K1
TRANSFORMER
HIGH LIMIT
22C GRN
ON/OFF SWITCH
1
2
3
J6
J2
HEAT
J3
BLOWER
J5 BLOWER
23C BRN
17C BLK
27C WHT
21C BRN
26C RED
25C ORG
24C BLK
GRN/YLW
BLK
WHT
19C BLK
20C WHT
20 amp FUSE
POWER CORD
INPUT
SSR
OUTPUT
60 HZ
BLOWER
RED
BLK
WHT
GRN
240V OPTION
(PLUG UNUSED WIRE
w/MALE PUSH-ON)
208V OPTION
200V/50 HZ
WHT
AIR HEATER
RED
WHT
RTD
8051355K