J1C, J1X, and J2X Master Jet Series Gas Fryers

Installation, Operation, Service, and Parts Manual

FRYMASTER®

Frymaster, a member of the Commercial Food Equipment Service Association, recommends using CFESA Certified Technicians.

PRINTED IN THE USA

24-Hour Service Hotline
1-800-551-8633

06/2022

8 1 9 6 5 1 3

service@frymaster.com

www.frymaster.com

NOTICE

This appliance is intended for professional use only and is to be operated by qualified personnel only. A FRYMASTER DEAN Factory Authorized Servicer (FAS) or other qualified professional should perform installation, maintenance, and repairs. Installation, maintenance, or repairs by unqualified personnel may void the manufacturer's warranty. See Chapter 1 of this manual for definitions of qualified personnel.

NOTICE

This equipment must be installed in accordance with the appropriate national and local codes of the country and/or region in which the appliance is installed. See NATIONAL CODE REQUIREMENTS in Chapter 2 of this manual for specifics.

NOTICE TO U.S. CUSTOMERS

This equipment is to be installed in compliance with the basic plumbing code of the Building Officials and Code Administrators International, Inc. (BOCA) and the Food Service Sanitation Manual of the U.S. Food and Drug Administration.

NOTICE

Drawings and photos used in this manual are intended to illustrate operational, cleaning and technical procedures and may not conform to onsite management operational procedures.

NOTICE TO OWNERS OF UNITS EQUIPPED WITH COMPUTERS

U.S.

This device complies with Part 15 of the FCC rules. Operation is subject to the following two conditions: 1) This device may not cause harmful interference, and 2) This device must accept any interference received, including interference that may cause undesired operation. While this device is a verified Class A device, it has been shown to meet the Class B limits.

CANADA

This digital apparatus does not exceed the Class A or B limits for radio noise emissions as set out by the ICES-003 standard of the Canadian Department of Communications.

Cet appareil numerique n'emet pas de bruits radioelectriques depassany les limites de classe A et B prescrites dans la norme NMB-003 edictee par le Ministre des Communcations du Canada.

⚠ DANGER

Improper installation, adjustment, maintenance or service, and unauthorized alterations or modifications can cause property damage, injury, or death. Read the installation, operating, and service instructions thoroughly before installing or servicing this equipment. Only qualified service personnel may convert this appliance to use a gas other than that for which it was originally configured.

⚠ DANGER

No structural material on the fryer should be altered or removed to accommodate placement of the fryer under a hood. Questions? Call the Frymaster/Dean Service Hotline at 1-800-551-8633.

⚠ DANGER

Adequate means must be provided to limit the movement of this appliance without depending upon the gas line connection. Single fryers equipped with legs must be stabilized by installing anchor straps. All fryers equipped with casters must be stabilized by installing restraining chains. If a flexible gas line is used, an additional restraining cable must be connected at all times when the fryer is in use.

⚠ DANGER

The front ledge of the fryer is not a step! Do not stand on the fryer. Serious injury can result from slips or contact with the hot oil.

⚠ DANGER

Do not store or use gasoline or other flammable liquids or vapors in the vicinity of this or any other appliance.

⚠ DANGER

Instructions to be followed in the event the operator smells gas or otherwise detects a gas leak must be posted in a prominent location. This information can be obtained from the local gas company or gas supplier.

DANGER

The crumb tray in fryers equipped with a filter system must be emptied into a fireproof container at the end of frying operations each day. Some food particles can spontaneously combust if left soaking in certain shortening material.

⚠ WARNING

Do not bang fry baskets or other utensils on the fryer's joiner strip. The strip is present to seal the joint between the fry vessels. Banging fry baskets on the strip to dislodge shortening will distort the strip, adversely affecting its fit. It is designed for a tight fit and should only be removed for cleaning.

NOTICE

IF, DURING THE WARRANTY PERIOD, THE CUSTOMER USES A PART FOR THIS FRYMASTER DEAN EQUIPMENT OTHER THAN AN UNMODIFIED NEW OR RECYCLED PART PURCHASED DIRECTLY FROM FRYMASTER DEAN, OR ANY OF ITS AUTHORIZED SERVICERS, AND/OR THE PART BEING USED IS MODIFIED FROM ITS ORIGINAL CONFIGURATION, THIS WARRANTY WILL BE VOID. FURTHER, FRYMASTER DEAN AND ITS AFFILIATES WILL NOT BE LIABLE FOR ANY CLAIMS, DAMAGES OR EXPENSES INCURRED BY THE CUSTOMER WHICH ARISE DIRECTLY OR INDIRECTLY, IN WHOLE OR IN PART, DUE TO THE INSTALLATION OF ANY MODIFIED PART AND/OR PART RECEIVED FROM AN UNAUTHORIZED SERVICER.

RETAIN AND STORE THIS MANUAL IN A SAFE PLACE FOR FUTURE USE.

J1C, J1X, & J2X Master Jet Series Atmospheric Gas Fryers

TABLE OF CONTENTS

PAGE #

CHAPTER 1: General Information
1.1 Parts Ordering and Service Information....1-1
1.2 Safety Information....1-1
1.3 Equipment Description....1-2
1.4 Installation, Operating, and Service Personnel....1-2
1.5 Definitions....1-3
1.6 Shipping Damage Claim Procedure....1-3

CHAPTER 2: Installation Instructions
2.1 General Installation Requirements....2-1
2.2 Leg Installation....2-3
2.3 Pre-Connection Preparations....2-3
2.4 Connection to Gas Line....2-4
2.5 Converting to Another Gas Type....2-7

CHAPTER 3: Operating Instructions
3.1 Start-Up Procedure....3-1
3.2 Boiling-Out the Frypot....3-3
3.3 Shutting Down the Fryer....3-4

CHAPTER 4: Filtration Instructions....4-1

CHAPTER 5: Preventive Maintenance
5.1 Fryer Preventive Maintenance Checks and Services....5-1
5.2 Annual/Periodic System Inspection....5-4

CHAPTER 6: Operator Troubleshooting
6.1 Introduction....6-1
6.2 Troubleshooting Thermostat Controlled Fryers....6-1
6.3 Troubleshooting Abnormal Burner Operation....6-2

CHAPTER 7: Service Procedures
7. Service Procedures Reference Picture (Figure 1)....7-1
7.1 Replace Controlling or High-Limit Thermostat....7-2
7.2 Calibrating a Thermostat after Installation....7-2
7.3 Replace the Pilot Generator Cartridge....7-3
7.4 Adjust the Pilot Flame....7-3
7.5 Burner Gas Pressure Adjustment....7-4
7.6 Replacing the Gas Valve....7-4
7.7 Removing the Main Burner Assembly....7-5
7.8 Replacing a Burner Deflector....7-5
7.9 Alignment and Adjustment of Burner Deflector Assemblies....7-6
7.10 Replacing the Frypot....7-6

CHAPTER 8: Service Parts
8.1 Main Components....8-1
8.2 Frypot Components....8-2
8.3 Burner Components....8-4
8.4 Accessories....8-6
8.5 Thermostat Components....8-7

FRYMASTER DOMESTIC WARRANTY

WHAT IS COVERED
This warranty covers all defects in workmanship and material in all commercial cooking appliances and computer/controller equipment manufactured by Frymaster and sold within the domestic United States, except as excluded below.

WHO IS COVERED
This warranty covers only the original purchaser of Frymaster commercial cooking appliances and computer/controller equipment. This warranty is not transferable. You must have your original sales receipt for warranty coverage.

WHAT WE WILL DO
We will repair or replace the defective appliance, component, or part. Such repair or replacement will be at the expense of Frymaster, LLC; except that travel over 100 miles or two hours, overtime, and holiday charges will be at the expense of the purchaser.

FRYPOT WARRANTY

Stainless steel frypots on all fryers, except as noted below, are warranted against manufacturing defects and/or weld seam failure for the lifetime of the fryer; parts and labor, except after one year, the warranty is limited to replacement parts. Stainless frypots for models listed below are warranted for the length of time indicated.

5 Years	**7 Years**	**10 Years**
GF14, GF40	H55 (Effective May 1, 1998)	Pasta Systems (Gas and Electric)
	Gas Protector	Rethermalizer
		Water Bath Station (Gas and Electric)

H55 and gas Protector® combustion chamber (infrared burners and structural components to mount the burners) warranted against defective material or workmanship for 7 years, parts and labor.

FENWAL THERMOSTATS
Warranted for two years, parts and labor, except after one year, the warranty is limited to replacement parts.

OTHER PARTS
All other parts components are warranted for one year from the date of purchase (parts and labor).

SHORTENING DISPOSAL UNIT
Warranted for 90 days parts and labor. In addition, the pump is warranted for one year, parts only.

REPLACEMENT PARTS AND DROP-IN FRYERS (J1X & J2X)
Parts, 90 days, no labor
Mild steel frypot, 90 days, no labor
Stainless Steel frypots, 1 year, 90 days labor
Computers, 1 year, no labor

HOW TO GET SERVICE
Contact our Factory Authorized Servicer to obtain warranty service. To find the name and location of the nearest FAS call your dealer, or call the Frymaster Service Hotline, 800-551-8633. You can also go to the Frymaster website, www.frymaster.com, click on Service, click on Locator, key in zip code and it will give you the FAS for that zip code. When calling for service, please furnish the model number, serial number, series code number, voltage of your appliance, and a description of the problem. You must keep your sales receipt for proof of your date of purchase.

WHAT THIS WARRANTY DOES NOT COVER
THE WARRANTIES PROVIDED BY FRYMASTER, LLC DO NOT APPLY IN THE FOLLOWING INSTANCES:

- Damage due to misuse, abuse, alteration, or accident.
- Improper or unauthorized repair.
- Failure to follow installation procedures, operation instructions and/or scheduled maintenance procedures as prescribed in your Frymaster Service and Owner's Manual.
- Damage in shipment.
- Removal, alteration, or obliteration of the rating plate.
- Changes in adjustment and calibrations after thirty (30) days from equipment installation date.
- Failure to program computer appliances in accordance with programming procedures prescribed in your Frymaster Service and Owner's Manual.
- Equipment exported to foreign countries.
- Normal maintenance items such as electric bulbs, fuses, gaskets, o-rings, interior and exterior finishes.
- Travel over 100 miles or two hours, overtime or holiday charges; all of which must be paid for by the purchaser.
- Consequential damages (the cost of repairing other property which is damaged), loss of time, profits, use or any other non-fryer related incidental damages of any kind.

GENERAL EXCLUSIONS
No warranty is provided for any Frymaster fryer used in a mobile installation or concession. Warranty protection is only offered for fryers installed in accordance with the procedures described in the Frymaster Service and Owner's Manual. Drop-in units, such as J1X and J2X, receive parts warranty only.

There are no implied warranties of merchantability of fitness for any particular use or purpose. This warranty is the only and complete statement with respect to warranties of your commercial cooking appliances and computer/controller equipment manufactured by Frymaster. There are no other documents or oral statements for which Frymaster will be responsible.

1.1 Parts Ordering and Service Information

In order to assist you as quickly as possible, the Frymaster Authorized Servicer (FAS) or Service Department representative requires certain information about your equipment. Most of this information is printed on a data plate affixed to the inside of the fryer door.

Parts orders must be placed directly with your local FAS or distributor. A list of Frymaster Factory Authorized Servicers (FAS's) is located on the Frymaster website at www.frymaster.com. If you do not have access to this list, contact the Frymaster Technical Service Department at 1-800-551-8633 or 1-318-865-1711.

When ordering parts, the following information is required:

Model Number: _____
Serial Number: _____
Type of Gas or Voltage: _____
Item Part Number: _____
Quantity Needed: _____

Service information may be obtained by contacting your local FAS. Information may also be obtained by calling the Frymaster Technical Service Department at 1-800-551-8633 or 1-318-865-1711.

When requesting service, please have the following information ready:

Model Number: _____
Serial Number: _____
Type of Gas: _____

In addition to the model number, serial number, and type of gas, please be prepared to describe the nature of the problem and have ready any other information that you think may be helpful in solving your problem.

1.2 Safety Information

Before attempting to operate your unit, read the instructions in this manual thoroughly.

Your fryer is equipped with a high limit thermostat, which detects high temperatures and shuts off gas to the burner assembly should the controlling thermostat fail.

Additionally, J2X fryers are equipped with a safety switch built into the drain valve to prevent burner ignition while the drain valve is open.

Throughout this manual, you will find notations enclosed in double-bordered boxes similar to the ones below.

⚠ CAUTION

CAUTION boxes contain information about actions or conditions that *may cause or result in a malfunction of your system*.

⚠ WARNING

WARNING boxes contain information about actions or conditions that *may cause or result in damage to your system*, and which may cause your system to malfunction.

⚠ DANGER

DANGER boxes contain information about actions or conditions that *may cause or result in injury to personnel*, and which may cause damage to your system and/or cause your system to malfunction.

1.3 Equipment Description

J1C, J1X, and J2X Master Jet Series gas fryers are designed for all-purpose frying applications. They come equipped with thermostat controllers for controlling the temperature of cooking cycles.

J1C Series gas fryers are tabletop fryers designed for limited space and all-purpose frying. J1C frypot capacity is 15-20 pounds.

J1X and J2X Series gas fryers are drop-in units designed for limited space and all-purpose frying. J1X frypot capacity is 15-20 pounds. J2X frypot capacity is 30-40 pounds. The J2X is equipped with a drain safety switch.

All three models are of an open-pot design and have a hand-sized opening into the deep cold zone, which makes cleaning the stainless frypot quick and easy. All fryers are shipped with a package of standard accessories. Each fryer is adjusted, tested, and inspected at the factory before crating for shipment.

Frypots are constructed of welded, heavy-gauge stainless steel. Heating is supplied by a burner assembly having multiple gas jets, which are focused on metal targets located around the lower side of the frypot. The burner assembly can be configured for natural gas, propane, or manufactured gas. The frypot is drained with a manual ball valve.

Master Jet Series Atmospheric fryers are equipped with a thermostat probe for precise temperature control. The probe is located on the centerline of the frypot for rapid response to changes in loads and to provide the most accurate temperature measurement.

1.4 Installation, Operating, and Service Personnel

Operating information for Frymaster equipment has been prepared for use by qualified and/or authorized personnel only, as defined in Section 1.6.

All installation and service on Frymaster equipment must be performed by qualified, certified, licensed, and or/authorized installation or service personnel, as defined in Section 1.6.

1.5 Definitions

QUALIFIED AND/OR AUTHORIZED OPERATING PERSONNEL

Qualified/authorized operating personnel are those who have carefully read the information in this manual and have familiarized themselves with the equipment functions, or who have had previous experience with the operation of the equipment covered in this manual.

QUALIFIED INSTALLATION PERSONNEL

Qualified installation personnel are individuals, or firms, corporations, or companies, which, either in person or through a representative, are engaged in and are responsible for the installation of gas-fired appliances. Qualified personnel must be experienced in such work, be familiar with all gas precautions involved, and have complied with all requirements of applicable national and local codes.

QUALIFIED SERVICE PERSONNEL

Qualified service personnel are those that are familiar with Frymaster equipment and who have been authorized by Frymaster, L.L.C. to perform service on Frymaster equipment. All authorized service personnel are required to be equipped with a complete set of service and parts manuals, and to stock a prescribed minimum amount of Frymaster equipment parts.

A list of Frymaster Factory Authorized Servicers (FAS's) is located on the Frymaster website at www.frymaster.com. ***Failure to use qualified service personnel will void the Frymaster Warranty on your equipment.***

1.6 Shipping Damage Claim Procedure

Your Frymaster equipment was carefully inspected and packed before leaving the factory. The transportation company assumes full responsibility for safe delivery upon acceptance of the equipment for transport.

What to do if your equipment arrives damaged:

1. **File a claim for damages immediately**, regardless of the extent of damages.
2. **Inspect for and record all visible loss or damage**, and ensure that this information is noted on the freight bill or express receipt and is signed by the person making the delivery.
3. **Concealed loss or damage** that was unnoticed until the equipment was unpacked should be recorded and reported to the freight company or carrier **immediately** upon discovery. A concealed damage claim must be submitted within 15 days of the date of delivery. Ensure that the shipping container is retained for inspection.

FRYMASTER L.L.C. DOES NOT ASSUME RESPONSIBILITY FOR DAMAGE OR LOSS INCURRED IN TRANSIT.

2.1 General Installation Requirements

Qualified, licensed, and/or authorized installation or service personnel, as defined in Section 1.6 of this manual, should perform all installation and service on Frymaster equipment.

Conversion of this appliance from one type of gas to another should only be performed by qualified, licensed, and/or authorized installation or service personnel as defined in Section 1.6 of this manual.

Failure to use qualified, licensed, and/or authorized installation or service personnel (as defined in Section 1.6 of this manual) to install, convert, to another gas type or otherwise service this equipment will void the Frymaster warranty and may result in damage to the equipment or injury to personnel.

Where conflicts exist between instructions and information in this manual and local or national codes or regulations, installation and operation shall comply with the codes or regulations in force in the country in which the equipment is installed.

⚠ DANGER
Building codes prohibit a fryer with its open tank of hot oil being installed beside an open flame of any type, including those of broilers and ranges.

Upon arrival, inspect the fryer carefully for visible or concealed damage. (See **Shipping Damage Claim Procedure** in Chapter 1.)

⚠ DANGER
Frymaster appliances equipped with legs are for stationary installations. Appliances fitted with legs must be lifted during movement to avoid damage to the appliance and bodily injury. Questions? Call 1-800-551-8633.

PROPER INSTALLATION IS ESSENTIAL FOR EFFICIENT, TROUBLE-FREE OPERATION OF YOUR FRYER. ANY UNAUTHORIZED ALTERATIONS MADE TO THIS EQUIPMENT WILL VOID THE FRYMASTER WARRANTY.

Upon arrival, inspect the fryer carefully for visible or concealed damage. (See **Shipping Damage Claim Procedure** in Chapter 1.)

2.1 General Installation Requirements (cont.)

CLEARANCE AND VENTILATION

⚠ DANGER
No structural material on the fryer should be altered or removed to accommodate placement of the fryer under a hood. Questions? Call the Frymaster/Dean Service Hotline at 1-800-551-8633.

⚠ DANGER
This appliance must be installed with sufficient ventilation to prevent the occurrence of unacceptable concentrations of substances harmful to the health of personnel in the room in which it is installed.

The fryer(s) must be installed with a 6" (150 mm) clearance at both sides and back when installed adjacent to combustible construction; no clearance is required when installed adjacent to noncombustible construction. A minimum of 24" (600 mm) clearance should be provided at the front of the fryer.

An important consideration of efficient fryer operation is ventilation. Ensure the fryer is installed so flue gas is removed efficiently and the kitchen ventilation system does not produce drafts that interfere with proper burner operation.

The fryer flue opening must not be placed close to the intake of the exhaust fan, and the fryer must never have its flue extended in a "chimney" fashion. An extended flue changes the combustion characteristics of the fryer, causing longer recovery time. It also frequently causes delayed ignition. To provide the airflow necessary for good combustion and burner operation, the areas surrounding the fryer front, sides, and rear must be kept clear and unobstructed.

Fryers must be installed in an area with an adequate air supply and adequate ventilation. Adequate distances must be maintained from the flue outlet of the fryer to the lower edge of the ventilation filter bank. Filters should be installed at an angle of 45 degrees. Place a drip tray beneath the lowest edge of the filter. For U.S. installation, NFPA standard No. 96 states, "A minimum distance of 18 inches (450 mm) should be maintained between the flue outlet and the lower edge of the grease filter." *Frymaster recommends that the minimum distance be 24 inches (600 mm) from the flue outlet to the bottom edge of the filter when the appliance consumes more than 120,000 BTU per hour*.

Information on construction and installation of ventilating hoods can be found in the NFPA standard cited above. A copy of the standard may be obtained from the National Fire Protection Association, Battery March Park, Quincy, MA 02269.

2.1 General Installation Requirements (cont.)

NATIONAL CODE REQUIREMENTS

The type of gas for which the fryer is equipped is stamped on the data plate attached to the inside of the fryer door. Connect a fryer stamped "NAT" only to **natural gas**, those stamped "PRO" only to **propane gas**, and those stamped "MFG" only to **manufactured gas**.

Installation shall be made with a gas connector that complies with national and local codes. Quick-Disconnect devices, if used, shall likewise comply with national and local codes.

2.2 Leg Installation

⚠ DANGER
DO NOT install this appliance without legs.

Depending upon the specific configuration ordered, the fryer might have been shipped without installed legs. If legs are installed, you may skip this section and proceed to Section 2.3, Pre-Connection Preparations.

If your fryer requires the installation of legs, install them in accordance with the instructions included in your accessory package.

2.3 Pre-Connection Preparations

⚠ DANGER
Do not connect this appliance to the gas supply before completing each step in this section.

⚠ DANGER
Do not attach an apron drain board to a single fryer. The fryer may become unstable, tip over, and cause injury. The appliance area must be kept free and clear of combustible materials at all times.

After the fryer has been positioned under the fry station exhaust hood, ensure the following has been accomplished:

1. Level fryers equipped with legs by screwing out the legs approximately 1 inch, and then adjust them so that the fryer is level and at the proper height in the exhaust hood. Frymaster recommends that the minimum distance from the flue outlet to the bottom edge of the filter be 24 inches (600 mm) when the appliance consumes more than 120,000 BTU per hour.

2.3 Pre-Connection Preparations (cont.)

2. Refer to the data plate on the inside of the fryer door to verify that the fryer burner is configured for the proper type of gas before connecting the gas line quick-disconnect device or piping from the gas supply line.

3. Verify the minimum and maximum gas supply pressures for the type of gas to be used in accordance with the accompanying tables:

Standard Incoming Gas Pressure for J1C, J1X, and J2X				
Gas	**Minimum (J1C/J1X)**	**Maximum (J1C/J1X)**	**Minimum (J2X)**	**Maximum (J2X)**
Natural	6" W.C. 1.5 kPa 15 mbar	14" W.C. 3.49 kPa 34.9 mbar	6" W.C. 1.5 kPa 15 mbar	14" W.C. 3.49 kPa 34.9 mbar
LP	10" W.C. 2.5 kPa 25 mbar	14" W.C. 3.49 kPa 34.9 mbar	11" W.C. 2.74 kPa 27.4 mbar	14" W.C. 3.49 kPa 34.9 mbar

2.4 Connection to Gas Line

⚠ DANGER
Before connecting new pipe to this appliance, the pipe must be blown out thoroughly to remove all foreign material. Foreign material in the burner and gas controls will cause improper and dangerous operation.

⚠ DANGER
When pressure-testing incoming gas supply lines, disconnect the fryer from the gas line if the test pressure will be ½ PSIG (3.45 kPa, 13.84 inches W.C.) or greater to avoid damage to the fryer's gas tubes and gas valve(s).

The size of the gas line used for installation is very important. If the line is too small, the gas pressure at the burner manifold will be low. This may cause slow recovery and delayed ignition. The incoming gas supply line should be a minimum of ½" (13 mm) in diameter. Refer to the chart below for the minimum sizes of connection piping.

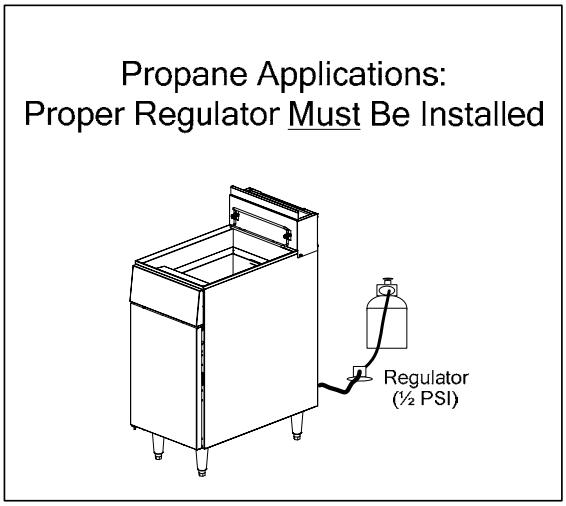

Gas Connection Pipe Sizes (Minimum incoming pipe size should be ½" (13 mm))		
Gas	**Connecting Pipe Size (J1C/J1X)**	**Connecting Pipe Size (J2X)**
Natural	¾" (19 mm)	¾" (19 mm)
LP/Propane	½" (13 mm)	½" (13 mm)
Manufactured	1" (25 mm)	1" (25 mm)

1. Connect the quick-disconnect hose to the fryer quick-disconnect fitting under the front of the fryer and to the building gas line.

   NOTE: Some fryers are configured for a rigid connection to the gas supply line. These units are connected to the gas supply line at the rear of the unit.

   When using thread compound, use very small amounts on male threads only. Use a pipe thread compound that is not affected by the chemical action of LP gases (Loctite PST567 sealant is one such compound). DO NOT apply compound to the first two threads. Applying compound to the first two threads will cause clogging of the burner orifices and control valve.

2. Open the gas-supply valve to the fryer and check all piping, fittings, and gas connections for leaks. A soap and water solution should be used for this purpose.

⚠ DANGER

All connections must be sealed with a joint compound suitable for the gas being used and all connections must be tested with a solution of soapy water before lighting any pilots.

Never use matches, candles, or any other ignition source to check for leaks. If gas odors are detected, shut off the gas supply to the appliance at the main shut-off valve and immediately contact the local gas company or an authorized service agency for service.

3. Close the fryer drain valve and fill the frypot with water and boil-out solution to the bottom OIL-LEVEL line at the rear of the frypot. Light the fryer and perform the boil-out procedures that are described in the "Lighting Instructions" and "Boiling Out the Frypot" topics found in Chapter 3 of this manual.

⚠ DANGER

"Dry-firing" your unit will cause damage to the frypot and can cause a fire. Always ensure that melted shortening, cooking oil, or water is in the frypot before firing your unit.

4. The burner manifold pressure should be checked at this time by the local gas company or an authorized service agent. The tables below indicate the proper burner manifold pressures:

Standard Burner Manifold Gas Pressure for J1C, J1X, and J2X		
Gas	**Pressure – J1C & J1X**	**Pressure – J2X**
Natural	4" W.C. 1.0 kPa 10 mbar	3" W.C. .75 kPa 7.5 mbar
LP	10" W.C. 2.5 kPa 25 mbar	8.25" W.C. 2.0 kPa 20 mbar

5. Check the thermostat calibration according to the Thermostat Calibration instructions in Chapter 5.

2.5 Converting to Another Gas Type

Your fryer is configured at the factory for either natural gas or Propane (LP) gas.

If you desire to switch from one type of gas to another, a gas conversion kit must be installed by an Factory Authorized Servicer technician.

⚠ DANGER
This appliance was configured at the factory for a specific type of gas. Converting from one type of gas to another requires the installation of specific gas-conversion components.

⚠ DANGER
Switching to a different type of gas without installing the proper conversion kit may result in fire! NEVER ATTACH THIS APPLIANCE TO A GAS SUPPLY FOR WHICH IT IS NOT CONFIGURED!

Conversion of this appliance from one type of gas to another should only be performed by qualified, licensed, and authorized installation or service personnel, as defined in Section 1.6 of this manual.

Gas Conversion Instructions
(for J1C Fryers only)

For fryers at elevations at or above 5,000 feet (1524 meters), call Frymaster Service (1-800-551-8633) to determine the components appropriate for your configuration and altitude. Contact your local FAS to order the components and arrange for installation. For fryers below 5000 feet (1524 meters), see the kits listed below for conversion. Kits applicable to non-CE units only.

Natural to Propane
Regulator Conversion Kit: P/N 807-1846
Pilot, regulator conversion kit, and orifices kit: P/N 826-1141 (**J1C**)

Propane to Natural
Regulator Conversion Kit: P/N 807-1849
Pilot, regulator conversion kit, and orifices kit: P/N 826-1142 (**J1C**)

3.1 Start-Up Procedure

⚠ DANGER
Never operate this appliance with an empty frypot. The frypot must be filled with water or cooking oil/shortening before lighting the burners. Failure to do so will damage the frypot and may cause a fire.

⚠ WARNING
The on-site supervisor is responsible for ensuring that operators are made aware of the inherent hazards of operating a hot oil filtering system, particularly the aspects of oil filtration, draining and cleaning procedures.

⚠ CAUTION
Before lighting the fryer, make sure the fryer is OFF and the frypot drain valve is closed. Remove the basket support rack, if installed, and fill the frypot to the bottom OIL-LEVEL line.

Solid shortening must be pre-melted prior to filling frypot.

⚠ CAUTION
No warranty is provided for any Frymaster fryer used in a mobile installation or concession. Warranty protection is only offered for fryers installed in accordance with the procedures described in this manual.

Ensure that the following steps are done in sequence before lighting or re-lighting the pilot:

1. Turn off the manual shut-off valve on the incoming service line.
2. Turn the operating thermostat.
3. Turn the gas valve knob to OFF.
4. Wait at least 5 minutes for any accumulated gas to disperse.
5. Fill the frypot with oil, liquid shortening or water to the bottom OIL LEVEL line scribed on the frypot back. Solid Shortening: Pre-melt solid shortening prior to filling frypot.

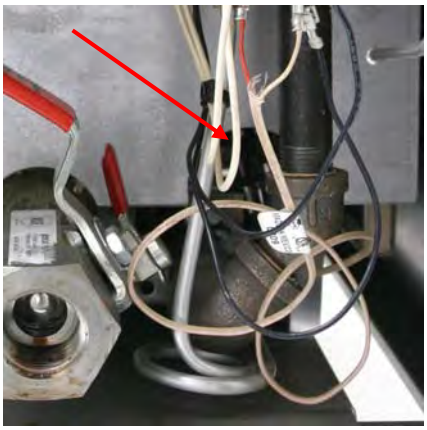

Insert match or taper through this hole to light pilot.

ACCESSING THE PILOT

The pilot is mounted on the left side of the burner manifold and is accessed through an opening in the front frypot insulation. Swing the round cover open and insert a long match or taper through the hole (see photo at right) when lighting the pilot.

3.1 Start-Up Procedure (cont.)

LIGHTING THE PILOT

1. Ensure power to the unit is OFF, and then turn the gas valve knob to the OFF position. Wait at least 5 minutes Ensure that the thermostat is set to the required frying temperature.

2. Rotate the gas valve knob to the PILOT position (see Figure 1).

Lighting the Pilot

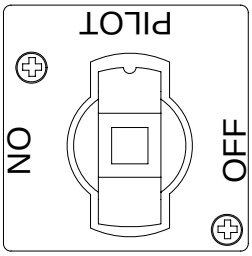

Figure 1

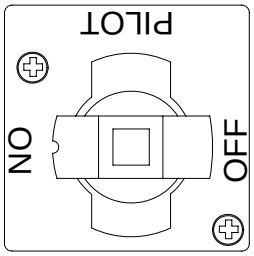

Figure 2

3. Push the knob in and light the pilot. (If the fryer is equipped with a piezo ignitor, repeatedly press the piezo ignitor button while depressing the gas valve knob until the pilot lights.) Continue to hold the knob in for about 60 seconds after the flame appears on the pilot. Release the knob. The pilot should remain lit.

⚠ CAUTION
If the pilot fails to remain lit, turn the gas valve knob to the OFF position and wait at least five minutes before attempting to re-light.

4. After the pilot remains lit, turn the knob counterclockwise to the ON position. See Figure 2.

5. The burner will now light and is controllable by the thermostat.

⚠ CAUTION
If the pilot and main burner go out the fryer(s) MUST be completely shut down at least 5 minutes before lighting.

MELT CYCLE

⚠ CAUTION
If this is the first time the fryer is being used after installation, refer to Section 3.2, Boiling-Out the Frypot.

Complete the following steps:

1. Make sure the fryer gas valve is in the OFF or PILOT position.
2. Close the frypot drain valve. Remove the basket support rack, if required.
3. Fill the frypot to the OIL-LEVEL line. When solid shortening is used, make sure it is packed down into the frypot cold zone.
4. To melt solid shortening without scorching, alternately turn the burner ON for 3 seconds and OFF for about 10 seconds until the shortening is melted. If smoke is seen during this process, the shortening is being heated too quickly and scorching. This step is not necessary if using liquid oil.

⚠ CAUTION
Thermostat-controlled fryers equipped with Melt Cycle switches will stay in the Melt Cycle mode until the Melt Cycle switch is placed in the OFF position.

3.2 Boiling-Out the Frypot

To ensure that the frypot is free of any contamination resulting from its manufacture, shipping, and handling during installation, the frypot must be boiled out before first use. Frymaster recommends boiling out the frypot each time the oil or shortening is changed.

⚠ DANGER
Never leave the fryer unattended during the boil-out process. If the boil-out solution boils over, turn the fryer off immediately and let the solution cool for a few minutes before resuming the process. To lessen the chance of boil over, turn the fryer's gas valve knob to the PILOT position occasionally.

1. Before lighting the burner, close the fryer drain valve(s) and fill the frypot to the bottom OIL-LEVEL line with a mixture of cold water and automatic dishwashing detergent.

2. Set the thermostat to the lowest setting. Turn the fryer on as described in Section 3.1 (Lighting the Pilot). Allow the solution to come to a boil, and then turn the gas valve knob to PILOT. Allow the solution to set for 30 minutes. Turn the gas valve knob to ON and allow the solution to come to a boil. Turn gas valve knob to PILOT and allow solution to set for 30 minutes.

3.2 Boiling-Out the Frypot (cont.)

3. Simmer the solution for 1 hour.

4. Turn the fryer gas valve knob to the PILOT position and allow the solution to cool.

5. Add 1 gallon (3.8 liters) of cold water and stir. Drain the solution into a suitable container and clean the frypot thoroughly.

⚠ WARNING
Do not drain boil-out solution into a shortening disposal unit, a built-in filtration unit, or a portable filter unit. These units are not intended for this purpose, and will be damaged by the solution.

6. Close the drain valve and fill the frypot with clean water. Clean the frypot with a frypot cleaning brush. Rinse the frypot at least twice by filling with clean water and draining. Dry the frypot thoroughly with a clean, dry towel.

⚠ DANGER
Remove all drops of water from the frypot before filling with cooking oil or shortening. Failure to do so will cause spattering of hot liquid when the oil or shortening is heated to cooking temperature and may cause injury to nearby personnel.

3.3 Shutting Down the Fryer

1. Open fryer door(s) and turn gas valve knob(s) to the PILOT position.

2. Depress gas valve knob(s) and turn slightly clockwise.

3. Release and continue turning clockwise to the OFF position.

4. Place frypot covers in place if equipped.

4. Filtration

⚠ WARNING
The on-site supervisor is responsible for ensuring that operators are made aware of the inherent hazards of operating a hot oil filtering system, particularly the aspects of oil filtration, draining and cleaning procedures.

⚠ DANGER
Draining and filtering of cooking oil or shortening must be accomplished with care to avoid the possibility of a serious burn caused by careless handling. The oil to be filtered is at or near 350°F (177°C). Ensure all hoses are connected properly and drain handles are in their proper position before operating any switches or valves. Wear all appropriate safety equipment when draining and filtering cooking oil or shortening.

⚠ DANGER
NEVER attempt to drain cooking oil or shortening from the fryer with the burner lit! Doing so will result in a flash fire if the oil or shortening splashes onto the burner. Applying burner heat to an empty frypot will severely damage the frypot and void warranties.

⚠ DANGER
Allow oil or shortening to cool to 100°F (38°C) or lower before draining to an appropriate container for disposal.

⚠ DANGER
When draining oil/shortening into a disposal unit or portable filter unit, do not fill above the maximum fill line located on the container.

The cooking oil or shortening must be drained into another suitable container. For safe, convenient draining and disposal of used cooking oil or shortening, Frymaster L.L.C. recommends the use of the Frymaster shortening disposal unit (SDU). The SDU is available through your local distributor.

1. Turn the fryer gas valve knob to PILOT. Screw the drainpipe (provided with your fryer) into the drain valve. Make sure the drainpipe is firmly screwed into the drain valve and that the opening of the curved end is pointing down.

4. Filtration (cont.)

2. Position a metal container with a sealable cover under the drainpipe. The metal container must be able to withstand the heat of the cooking oil or shortening, and hold hot liquids. If you intend to reuse the oil or shortening, use a Frymaster filter cone holder and filter cone when a filter machine is not available. If you are using a Frymaster filter cone holder, be sure that the cone holder rests securely on the metal container.

3. Open the drain valve slowly to avoid splattering. If the drain valve becomes clogged with food particles, use the Fryer's Friend (poker-like tool) to clear the blockage.

⚠ DANGER
DO NOT insert anything into the drain from the front to unclog the valve. Hot oil/shortening will rush out, creating an extreme hazard.

⚠ WARNING
DO NOT hammer on the drain valve with the Fryer's Friend. This will damage the drain valve ball and prevent the valve from sealing securely, resulting in a leaky valve.

4. After draining the oil or shortening, clean all food particles and residual oil or shortening from the frypot. Use caution as frypot residue can cause severe burns if it contacts bare skin.

5. Close the drain valve securely and fill the frypot with clean, filtered or fresh cooking oil or solid shortening to the bottom OIL-LEVEL line.

⚠ DANGER
When using solid shortening, pack it down into the cool-zone and the bottom of the frypot. DO NOT operate the fryer with a block of shortening sitting in the upper portion of the frypot. Irreparable damage to the frypot and a potential flash fire will result.

5.1 Fryer Preventive Maintenance Checks and Services

DAILY CHECKS AND SERVICES

Inspect Fryer and Accessories for Damage

Look for loose or frayed wires and cords, leaks, foreign material in frypot or inside cabinet, and any other indications that the fryer and accessories are not ready and safe for operation.

Inspect the burner targets. Ensure the targets are in position above each orifice, and that the flame ignites approximately 2-½ inches (60 mm) above the orifice. The flame should strike the center of the target and be a rich blue color. Call your factory authorized servicer (FAS) if you see any problems.

Clean Fryer Cabinet Inside and Out

⚠ DANGER
Never attempt to clean the fryer during the cooking process or when the frypot is filled with hot oil. If water comes in contact with oil heated to cooking temperature, it can cause spattering, which can result in severe burns to nearby personnel.

⚠ WARNING
Use a commercial-grade cleaner formulated to effectively clean and sanitize food-contact surfaces. Read the directions for use and precautionary statements before use. Particular attention must be paid to the concentration of cleaner and the length of time the cleaner remains on the food-contact surfaces.

Clean inside the fryer cabinet with dry, clean cloth. Wipe all accessible metal surfaces and components to remove accumulations of oil and dust.

Clean the outside of the fryer cabinet with a clean, damp cloth soaked with dishwashing detergent, removing oil, dust, and lint from the fryer cabinet.

Filter Cooking Oil

The cooking oil used in your fryer should be filtered at least once every day (more often if the fryer is in constant use). Refer to Chapter 4, Filtration Instructions, for details.

5.1 Fryer Preventive Maintenance Checks and Services (cont.)

QUARTERLY CHECKS AND SERVICES

Drain and Clean Frypot

During normal usage of your fryer, a deposit of carbonized cooking oil will gradually form on the inside of the frypot. This deposit must be periodically removed to maintain your fryer's efficiency.

⚠ DANGER
Allow oil to cool to 100°F (38°C) or lower before draining to an appropriate container for disposal.

For safe, convenient draining and disposal of used cooking oil, Frymaster recommends the use of our shortening disposal unit (SDU). The SDU is available through your local distributor.

Clean Detachable Parts and Accessories

As with the frypot, a deposit of carbonized oil will accumulate on detachable parts and accessories such as baskets.

Wipe all detachable parts and accessories with a clean cloth dampened with a detergent solution. Rinse and thoroughly dry each part.

Check Calibration of Thermostat Temperature Control Knob

1. Ensure frypot is filled with cooking oil.

2. Set the temperature control knob to frying temperature.

3. Let the burner cycle on and off automatically three times in order for the cooking oil temperature to become uniform. If necessary, stir to get all shortening in the bottom of the frypot melted.

4. Insert a good-grade thermometer or pyrometer into the oil, with the end touching the fryer temperature probe.

5. When the burner starts for the fourth time, the thermometer/pyrometer reading should be within ± 5ºF (2ºC) of the temperature knob setting. If not, calibrate as follows:

   a. Loosen the setscrew in the temperature control knob until the knob rotates freely on the shaft.

   b. Rotate the knob until the index line on the knob is aligned with the marking that corresponds to the thermometer or pyrometer reading.

5.1 Fryer Preventive Maintenance Checks and Services (cont.)

c. Hold the knob and tighten the setscrew.

d. Recheck the thermometer/pyrometer reading against the temperature control knob setting the next time the burner comes on.

e. Repeat steps 4.a. through 4.d. until the thermometer/pyrometer reading and knob setting are within ± 5ºF (2°C).

If calibration is not possible, contact a factory authorized servicer (FAS) for service.

Clean Gas Valve Vent Tube

1. Carefully unscrew the vent tube from the valve. (**NOTE:** The vent tube may be straightened by hand.)

2. Pass a piece wire through the tube to remove any obstruction.

3. Remove the wire and blow through the tube to ensure it is clear.

4. Reinstall tube and bend it so that the opening is pointing downward.

SEMI-ANNUAL CHECKS AND SERVICES

Check Burner Manifold Pressure

⚠ DANGER
This task should be performed by qualified service personnel only. Contact a FAS to arrange this service.

5.2 Annual/Periodic System Inspection

This appliance should be inspected and adjusted periodically by qualified service personnel as part of a regular kitchen maintenance program. Frymaster recommends that this appliance be inspected at least annually by a Factory Authorized Servicer (FAS) as follows:

- Inspect the cabinet inside and out, front and rear for excessive oil build-up and/or oil migration.
- Verify that the flue opening is not obstructed by debris or accumulations of solidified oil or shortening.
- Verify that burners and associated components (i.e. gas valves, pilot assemblies, ignitors, etc.) are in good condition and functioning properly. Inspect all gas connections for leaks and verify that all connections are properly tightened.
- Verify that the burner manifold pressure is in accordance with that specified on the appliance's rating plate.
- Verify that the temperature and high-limit probes are properly connected, tightened and functioning properly, and that probe guards are present and properly installed.
- Verify that component box components (i.e. transformers, relays, interface boards, etc.) are in good condition and free from oil migration build-up and other debris. Inspect the component box wiring and verify that connections are tight and that wiring is in good condition.
- Verify that all safety features (i.e. drain safety switches, reset switches, etc.) are present and functioning properly.
- Verify that the frypot is in good condition and free of leaks and that the frypot insulation is in serviceable condition. Verify that the frypot tube diffusers are present and in good condition (i.e. no visible deterioration or damage).
- Verify that wiring harnesses and connections are tight and in good condition.

6.1 Introduction

This chapter provides an easy reference guide to the more common problems that may occur during the operation of your equipment.

If you are in doubt as to the proper action to take, do not hesitate to call the Frymaster Technical Service Department or your local Frymaster factory authorized servicer (FAS) for assistance.

⚠ DANGER
Hot cooking oil/shortening will cause severe burns. Never attempt to move this appliance when filled hot cooking oil/shortening or to transfer hot cooking oil/shortening from one container to another.

6.2 Troubleshooting Thermostat Controlled Fryers

PROBLEM	Probable Causes	Corrective Action
Thermostat does not call for heat (does not energize gas control valve at all).	A. Thermostat wires damaged or broken. B. Thermostat set too low. C. Thermostat out of calibration. D. Thermostat contacts burned and pitted.	A. Repair or replace thermostat wires. B. Increase thermostat setting. C. Recalibrate the thermostat. D. Replace the thermostat.
Thermostat does not control at set point.	A. Thermostat out of calibration. B. Thermostat contacts contaminated.	A. Recalibrate the thermostat. B. Replace the thermostat.
Burner does not light.	A. Pilot is not lit. B. Drain valve is not fully closed. (J2X) C. No gas being supplied to unit.	A. Light pilot per instructions in Chapter 3 of this manual. B. Verify that unit is correctly plugged in and that circuit breaker is not tripped. C. Verify that the gas line connections are properly connected, that any cutoff valves between the fryer and the gas main are open, and that the main gas cutoff valve is open.

6.3 Troubleshooting Abnormal Burner Operation

PROBLEM	PROBABLE CAUSES	CORRECTIVE ACTION
Main burner will not come on. Pilot remains lit.	A. Loose, dirty, or corroded terminals on gas valve. B. High resistance in contacts of thermostat. C. Thermostat out of calibration. D. Automatic gas valve defective. E. Automatic gas valve knob turned to PILOT position.	A. Clean and tighten terminals on gas valve and thermostat. B. Replace thermostat. C. Calibrate thermostat. D. Replace gas valve. E. Turn gas valve knob to ON position.
Main burner does not light all the way around.	A. Rear burner flame deflector broken off. B. Burner gas pressure too high or too low. C. One or more main burner orifices clogged. D. Fryer flue connected directly to vent hood with a chimney-like duct.	A. Install new rear burner flame deflector. B. Adjust gas pressure. **J1C & J1X:** **Natural Gas – 4 in. W.C. (1.0 kPa).** **LP Gas – 10.0 in. W.C. (2.50 kPa).** **J2X:** **Natural Gas – 3 in. W.C. (.75 kPa).** **LP Gas – 8.25 in. W.C. (2.0 kPa).** C. Clean burner orifices and blow out with compressed air. D. Remove chimney-like duct and allow for at least 18" (46 cm) between flue outlet and vent hood filters.
Fryer is operating normally, but flames are rolling out of the front of the burner.	Obstructed gas valve vent tube.	Shut the fryer down and clean the gas valve vent tube in accordance with the instructions on Page 5-3 of this manual.

Flame rolling out from under fryer.	A. Flue obstructed. B. Too little make-up air in store.	A. Clean obstruction from flue. B. Increase make-up air into store.
Main burner delayed ignition (when delay is only 2 or 3 seconds).	A. One or more burner flame deflectors broken off. B. Pilot flame low – less than 1 inch (25.4 mm). C. Pilot flame directed away from first orifice on main burner. D. Fryer incoming gas pressure too low. E. Fryer incoming gas line too small. F. One or more burner orifices clogged.	A. Install new burner flame deflectors. B. Adjust pilot flame to 1 ½ inches (38 mm). C. Reposition pilot hood to direct flame toward first burner orifice. D. Have local gas company raise incoming gas to the proper pressure. E. Replace incoming gas line with proper size. F. Clean burner orifices with proper orifice drill.
Pilot light remains lit when gas valve is pushed in, but goes out when released.	A. Gas valve pilot magnet weak. B. Pilot generator has low millivolt output. C. High-limit thermostat stuck open. D. Loose, dirty, or corroded high-limit wires.	A. Replace gas valve. B. Replace pilot generator. C. Replace high-limit. D. Clean/tighten high-limit wires on the gas valve.

Pilot outage.	A. Automatic gas valve knob turned to off position. B. Low pilot flame. C. Clogged pilot orifice. D. Pilot burner clogged around pilot generator. E. Pilot flame blowing away from pilot generator (excessive draft in kitchen). F. Pilot generator not inserted fully into pilot burner. G. Pilot generator low output. H. High resistance in high-limit thermostat contacts. I. Defective pilot magnet in gas valve. J. Corroded connection where pilot generator connects to gas valve.	A. Turn gas valve to PILOT position, relight pilot. B. Adjust pilot flame to 1 ½ inches (38mm). C. Remove and clean the pilot orifice. Reinstall. D. Remove pilot burner. Clean burner. E. Eliminate draft in the kitchen. F. Reinsert pilot generator into pilot burner until flame surrounds tip. G. Replace pilot generator. H. Replace high-limit thermostat. I. Replace gas valve. J. Clean pilot generator connection at gas valve.

7. Service Procedures

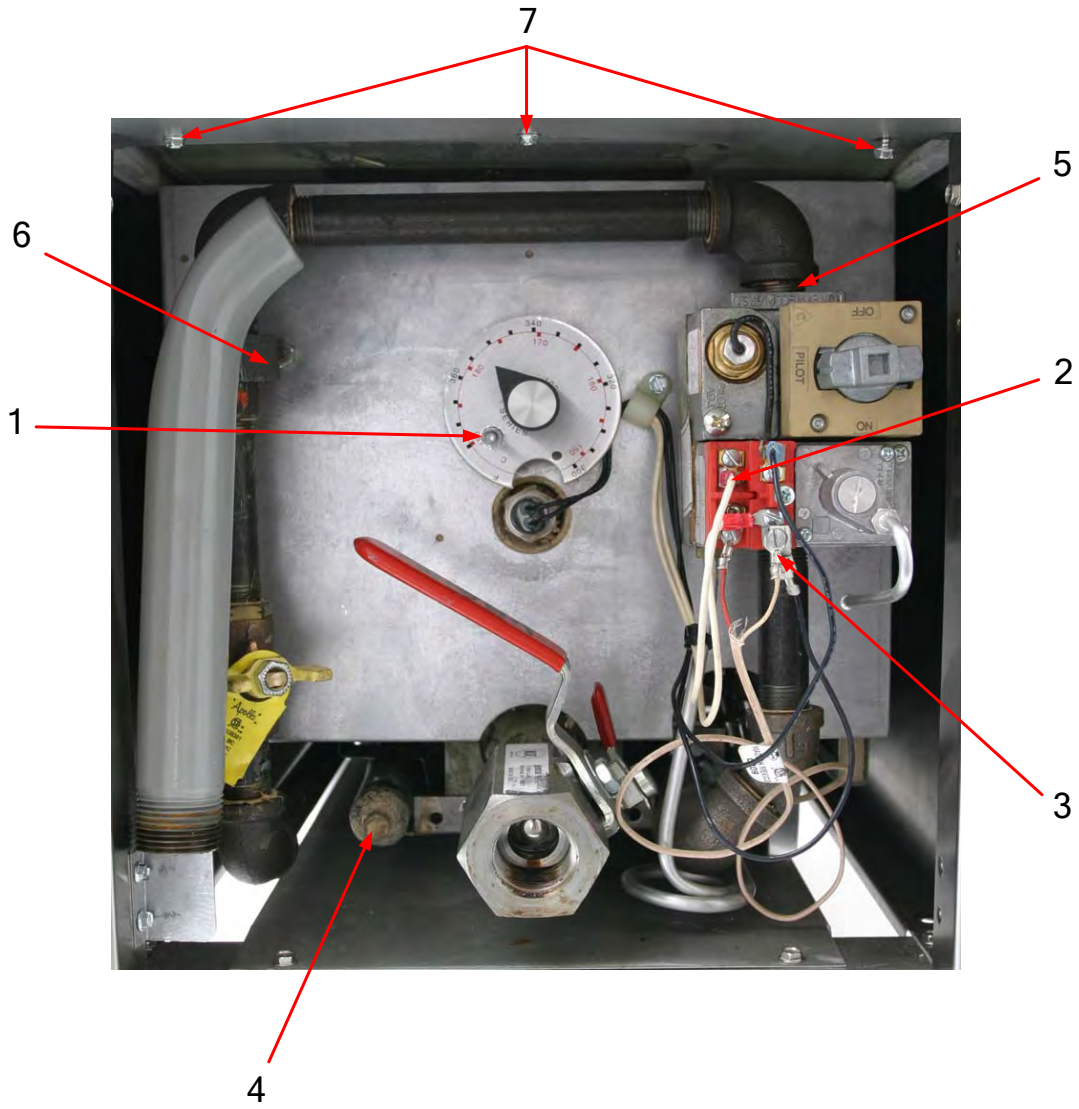

Figure 1: Cabinet Interior

Item	Description	Reference
1	Screw in Dial Plate	7.1, Step 2
2	Thermostat Wires	7.1, Step 4
3	Pilot Generator Wires	7.3, Step 1
4	Pressure Tap Plug	7.5, Step 2
5	Pilot Gas Line and Fitting	7.6, Step 3
6	Pipe Union	7.7, Step 4
7	Three Screws Attaching Cowl/Topcap	7.10, Step 4

⚠ CAUTION
When installing thermostats, DO NOT OVER TORQUE.

When electrical wires are disconnected, it is recommended that they be marked to facilitate reassembly.

7.1 Replace Controlling or High-limit Thermostat

1. Drain shortening from the frypot.
2. Use an allen wrench to loosen set screw at the side of the thermostat knob. Remove the thermostat knob. See Figure 1, Item 1.
3. Remove the 2 set screws on either side of the thermostat shaft and remove the dial plate.
4. Disconnect the thermostat wires from the gas valve. See Figure 1, Item 2.
5. Use a slotted socket to unscrew the thermostat from the frypot.
6. Apply a small amount of Loctite PST56765 compound to the threads of the new thermostat. Install the thermostat.
7. To change the high-limit thermostat, disconnect the wires at the gas valve and follow instructions listed in Steps 5 and 6 to replace thermostat.
8. To calibrate the newly installed thermostat, see Section 5.1.

7.2 Calibrating a Thermostat after Installation

1. Fill the frypot to the OIL-LEVEL LINE with shortening. Pre-melt solid shortening before starting calibration.
2. Ensure the gas valve knob is in the OFF position.
3. Insert a mercury thermometer or pyrometer in the center of the frypot 2 to 3 inches (50 to 75mm) deep.
4. Turn the fryer gas valve to the ON position.
5. When the shortening temperature reaches 325°F (162°C), turn the thermostat adjusting screw clockwise until the burner shuts off.
6. Allow the fryer to sit for a few minutes, and then slowly turn the thermostat adjusting screw counterclockwise until the burner lights.
7. Repeat Steps 5 and 6 until 325°F (162°C) is reached. A good calibration point is halfway between the lowest and highest temperature dial readings. This point should be at the 12 o'clock position. The fryer is in calibration if the burner lights at the calibration point as the shortening temperature drops - not when the burner shuts off as the temperature rises.

NOTE: If the burner does not light at this time, it does not mean the thermostat is defective. Recheck the wiring, and then slowly turn the thermostat adjusting screw counterclockwise until the burner lights.

Turning the adjusting screw counterclockwise causes the burner to light, and turning it clockwise causes the burner to shut off.

8. Once the calibration point of 325°F (162°C) is reached, the burner should be allowed to cycle on and off at least 3 times to be sure it will light at the calibrated temperature.

9. After the thermostat calibration is complete, turn off the fryer.

10. Reinstall the knob on the thermostat shaft making sure the mark on the knob points to the 325° position.

7.3 Replace the Pilot Generator Cartridge

1. Disconnect the pilot generator wires from the top of the gas valve. See Figure 1, Item 3.
2. Pull out on the retaining clip holding the cartridge. Push down on cartridge and remove from the pilot assembly. See Figure 2.
3. Reverse the previous procedures to install the new cartridge.

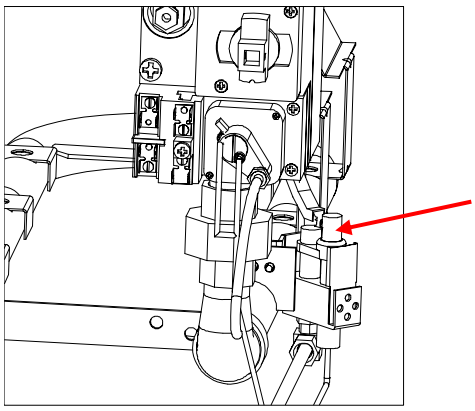

Figure 2

7.4 Adjust Pilot Flame

1. Remove the screw from the pilot adjustment hole on the gas valve. See Figure 3.

2. Use a small tip screwdriver to turn the pilot adjusting screw counterclockwise to obtain a pilot flame of 1 to 1 1/2 inches long. To decrease the length of the pilot flame, turn the screw clockwise.

3. Reinstall the pilot adjustment hole cap when the required flame size is obtained.

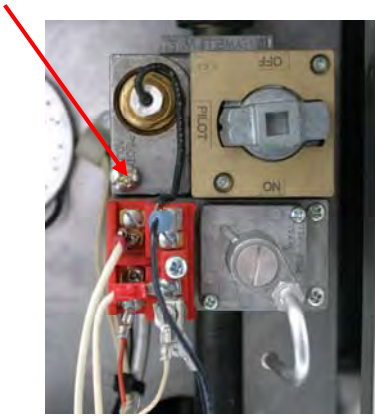

Figure 3

NOTE: Thermopile should NOT glow red.

7.5 Burner Gas Pressure Adjustment

1. Turn the gas valve knob to the PILOT position.

2. Remove the pressure tap plug from the end of the burner manifold. See Figure 1, Item 4.

3. Install fitting furnished with the manometer and attach manometer hose to fitting.

4. Remove the cap from the gas valve regulator adjustment screw. Turn the gas valve to the ON position. See Figure 4.

5. Increase the setting on the thermostat until the burner comes on.

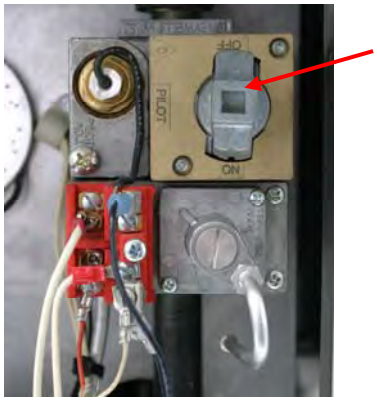

Figure 4

6. Monitor the gas pressure reading on the manometer.

7. Adjust the gas valve regulator adjustment screw to obtain burner manifold pressure as follows:

   J1C, J1X – Natural Gas – 4 in. W.C. (7.0 kPa).
   J1C, J1X – LP Gas – 10.0 in. W.C. (2.50 kPa).

   J2X – Natural Gas – 3 in. W.C. (.75 kPa).
   J2X – LP Gas – 8.25 in. W.C. (2.0 kPa).

   *** Turning the screw clockwise increases pressure, counterclockwise decreases pressure.**

8. Install the gas valve regulator cap screw when the correct manifold pressure is obtained.

9. Switch fryer off, remove the manometer fitting from the manifold tap hole, and reinstall the pressure tap plug.

7.6 Replacing the Fryer Gas Valve

1. Disconnect the gas supply to the fryer.

2. Disconnect the wires from the gas valve terminal block. Mark wires to facilitate reinstallation.

3. Remove the pilot gas line and fitting from the valve. See Figure 1, Item 5.

4. Loosen pipe union on the side of the valve and remove the valve.

5. Remove the pipe fittings from the old gas valve and reinstall on the replacement valve. Apply PST56765 Loctite pipe thread sealant to threads.

6. Reverse the previous procedures to install replacement gas valve.

7.7 Removing the Main Burner Assembly

1. Disconnect the gas supply to the fryer.

2. Disconnect the control and high-limit wires at the gas valve.

3. Remove the drain nipple if stored inside the cabinet.

4. Loosen the pipe union to the left of the valve. See Figure 1, Item 6.

5. Remove the 2 burner hanger screws. See Figure 5.

6. Lower the front of the burner assembly and pull straight out to remove.

7. Reverse the previous procedures to re-install burner assembly.

Figure 5

7.8 Replacing Burner Deflector

1. Disconnect the gas supply to the fryer.

2. Perform steps in Section 7.7 (*Removing the Main Burner Assembly*) to remove the burner assembly.

3. Using a 1/2 inch box end wrench or socket and ratchet, remove the 2 brass orifices that hold the target bracket to the burner manifold. See Figure 6.

4. Reverse the previous procedures to install the replacement deflector.

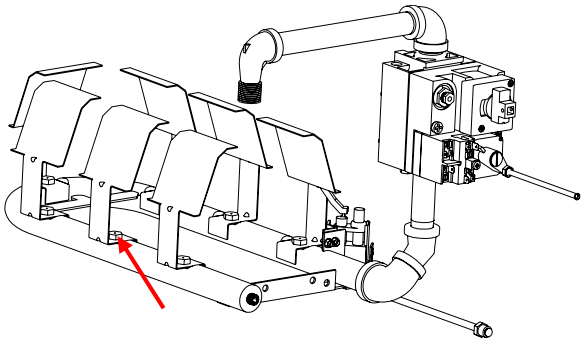

Figure 6

⚠ CAUTION
Use caution to prevent cross threading and stripping when reinstalling the brass orifices.

7.9 Alignment & Adjustment of Metal Burner Deflector

1. Proper alignment of all burner targets should be 3/4 inch between the top edge of the targets and the wall of the frypot.

2. To adjust targets, bend the deflector brackets away or toward the frypot to obtain the 3/4 inch measurement. See Figure 7.

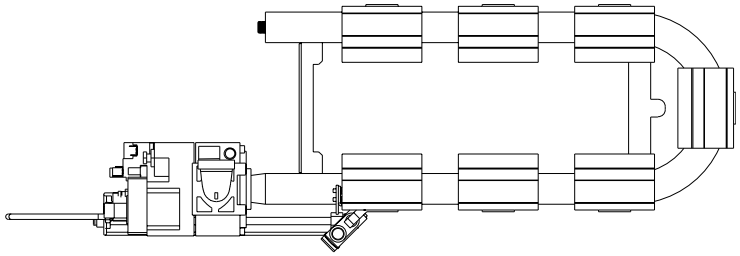

Figure 7

7.10 Replacing the Frypot

1. Drain all shortening from the frypot.

2. Disconnect the fryer from the gas supply.

3. If equipped, remove the frypot covers and basket hangers.

4. Remove the screws from the cowl and lift up and off the fryer. See Figure 8 and Figure 1, Item 7.

5. Remove the screws from the sides and back of the flue cap and remove the flue cap. See Figure 9.

6. Lift frypot complete with burner, gas valve, flue, drain valve, and combustion chamber from the fryer cabinet. After lifting frypot partially out of the cabinet, tilt the front of the pot up slightly to clear the drain valve.

7. Remove the burner assembly, flue, drain valve, and combustion chamber from the old frypot and install on the new frypot.

8. Reverse the previous procedures to install the new frypot assembly.

Figure 8

Figure 9

8.1 Main Components

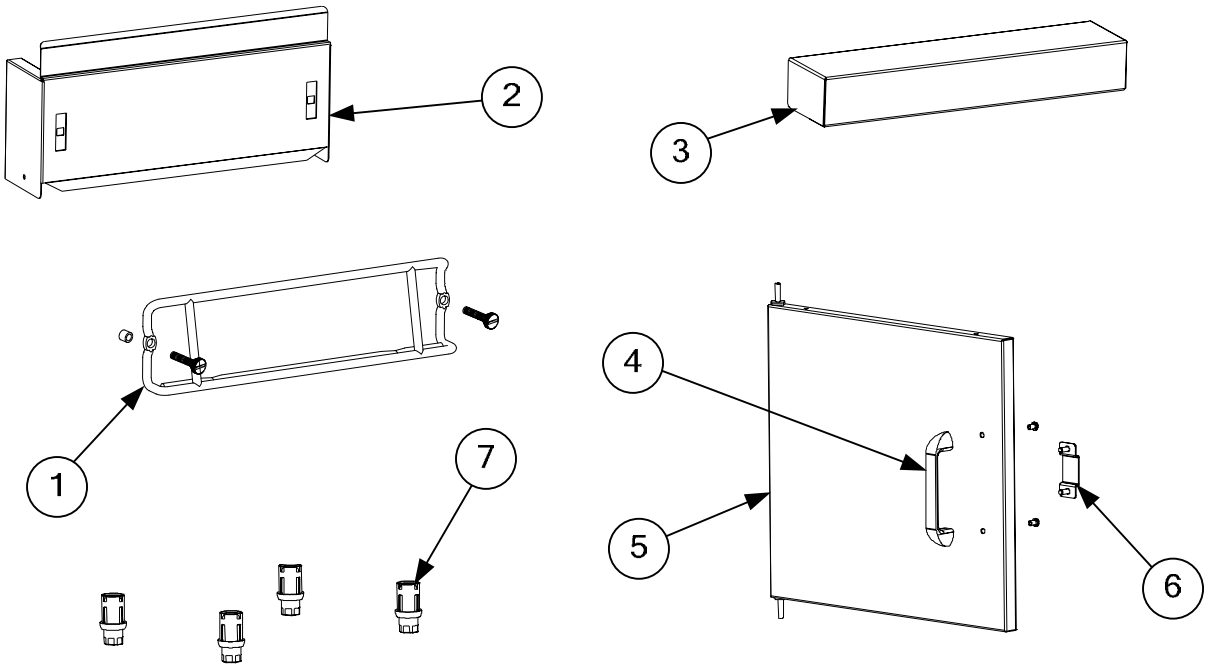

ITEM	PART #	COMPONENT
1	826-1015	Basket Hanger
2	210-8093	Flue Cap, J1C
3	824-1965	Top Cap/Cowl, J1C
4	810-0180	Door Handle, J1C
5	806-9562	Door, J1C
6	900-1840	Plate, Magnet Striker
7	803-0053	Adjustable Leg, J1C
*		Frypot, Flue, Drain Valve ***(see Page 8-2)***

* Not illustrated.

8.2 Frypot Components

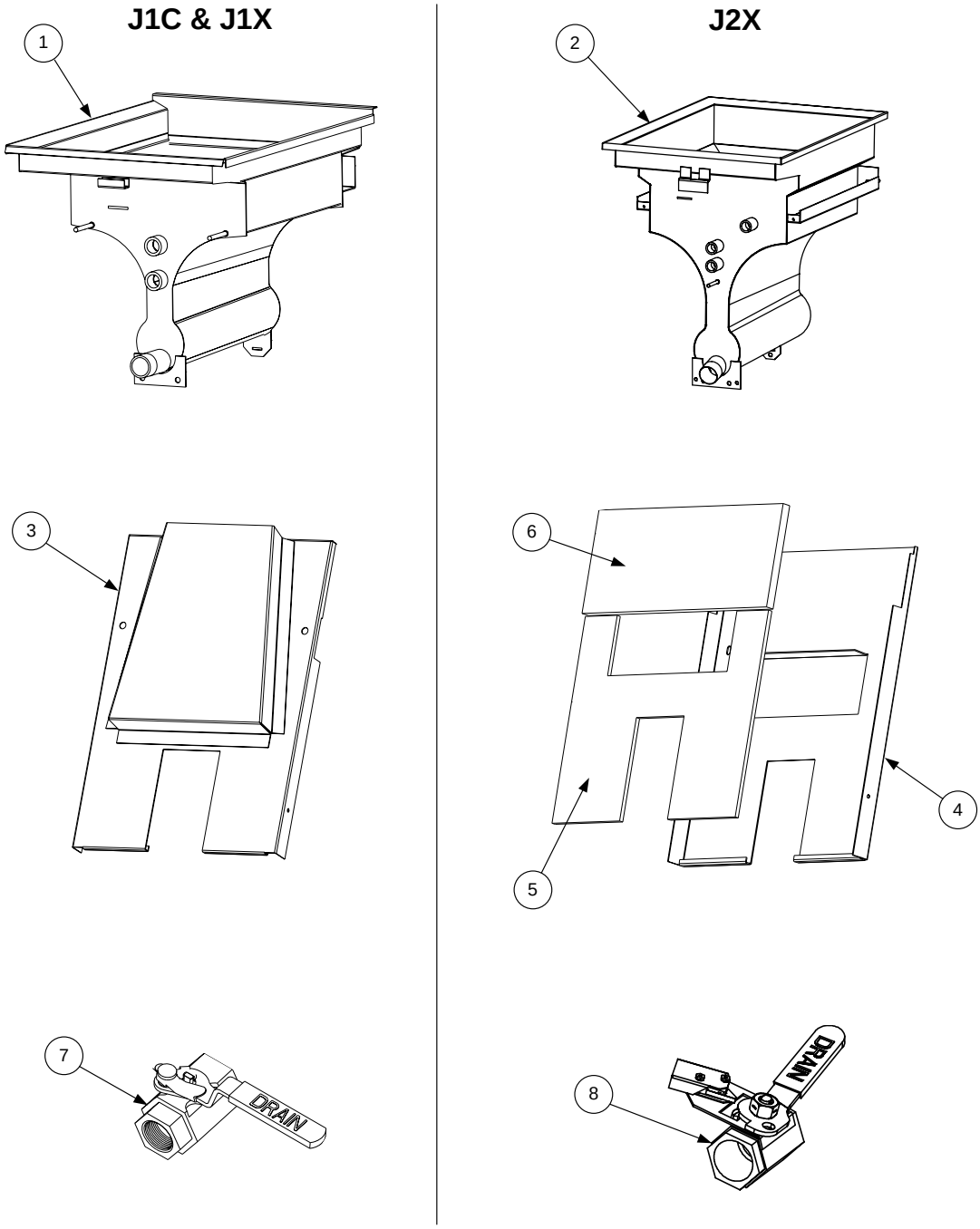

ITEM	PART #	COMPONENT
1	106-9762	Frypot Assembly, J1C
*	806-47821	Frypot Assembly, J1X
2	806-4167SP	Frypot Assembly, J2X
3	108-0842	Flue Assembly, J1C & J1X
4	806-0289	**Flue Assembly, J2X**
5	812-0401	Insulation, Flue Front
6	812-0392	Insulation, Flue Upper
7	806-7915	**Drain Valve, J1C & J1X (Full Assembly)**
	810-1338	Valve, 1" Ball
	810-1568	Handle, Drain Valve
8	806-8135	**Drain Valve, J2X (Full Assembly)**
	810-1020	Valve, 1 ¼" Ball
	806-8137	Bracket, Drain Switch
	810-0820	Handle, Drain Valve
	816-0211	Sleeve, 1 ¼" Valve Handle
	809-0237	Nut, 4-40 Keps Hex with External Teeth
	816-0220	Insulation, Switch
	809-0540	Nut, ½-13 Hex, 2-Way Locking, Zinc Plated
	901-2348	Cover, Safety Switch
	807-2103	Microswitch, Micro Straight Lever

8.3 Burner Components

J1C & J1X Burner Manifold Assembly

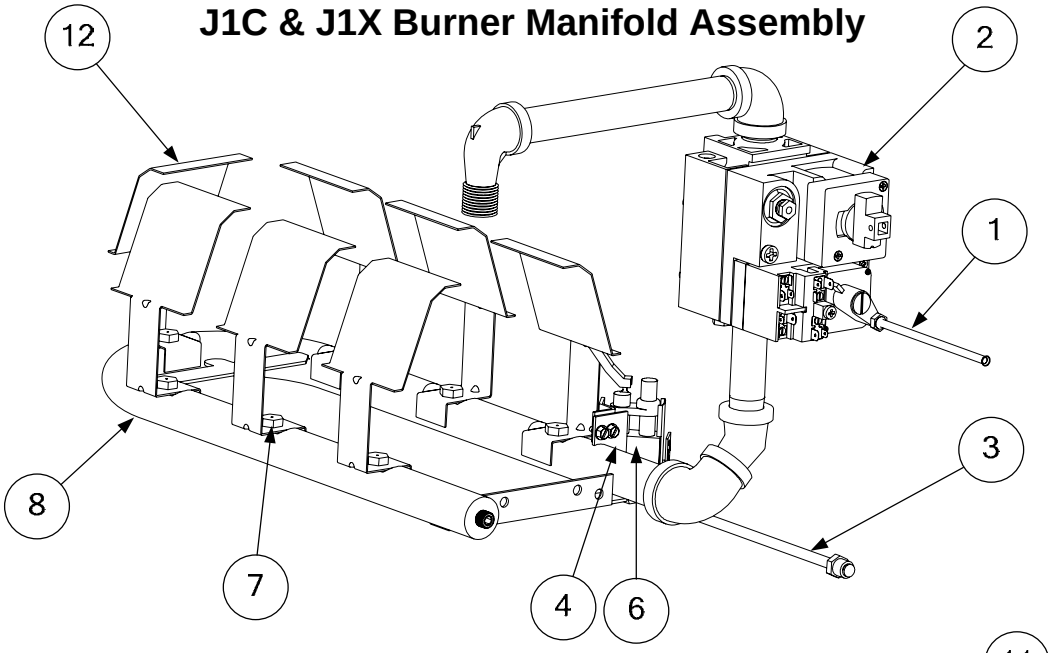

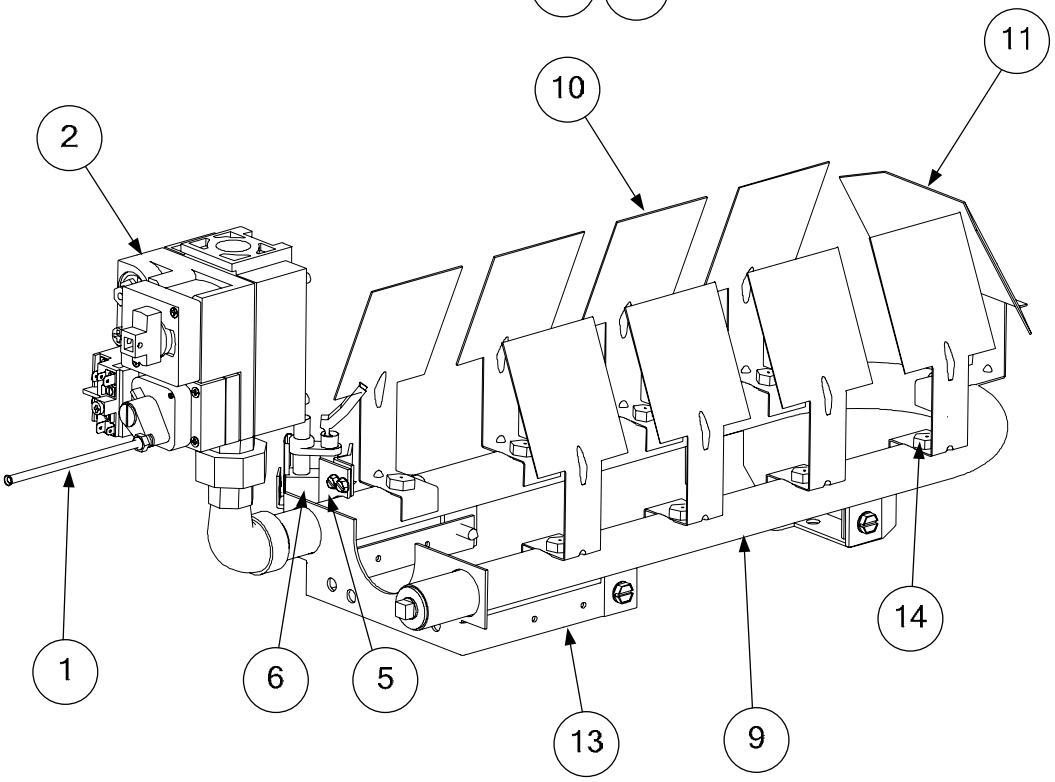

J2X Burner Manifold Assembly

ITEM	PART #	COMPONENT
1	810-0691	Vent Tube
2		**Gas Valve**
	826-1579	Millivolt Gas Valve, Honeywell, Natural
	826-1580	Millivolt Gas Valve, Honeywell, Propane
3	810-0703	Pilot Tubing, Gas Valve to Pilot
4	900-1033	Pilot Mounting Bracket, J1C & J1X
5	900-1032	Pilot Mounting Bracket, J2X
6		**Pilot Assembly**
	810-2071	Pilot Assembly, Natural
	810-1773	Pilot Assembly, Propane
	810-1831	Pilot Assembly, Manufactured Gas
7		**Burner Orifice**
	810-0131	Burner Orifice, #56, 1.30 mm, Natural, J1C & J1X
	810-0129	Burner Orifice, #51, 1.70 mm, Natural, J2X
	810-0140	Burner Orifice, #67, .81 mm, Propane, J1C & J1X
	810-0134	Burner Orifice, #59, 1.05 mm, Propane, J2X
	810-1154	Burner Orifice, 2.80 mm, Manufactured Gas, J2X
8	823-0244	Burner Manifold, J1C & J1X
9	810-1862	Burner Manifold, J2X
10	230-1178	Deflector, Side, J2X
11	230-1180	Deflector, Rear, J2X
12	230-1568	Deflector, J1C & J1X
13	200-0173	Bracket, Manifold Mounting, J2X

8.4 Accessories

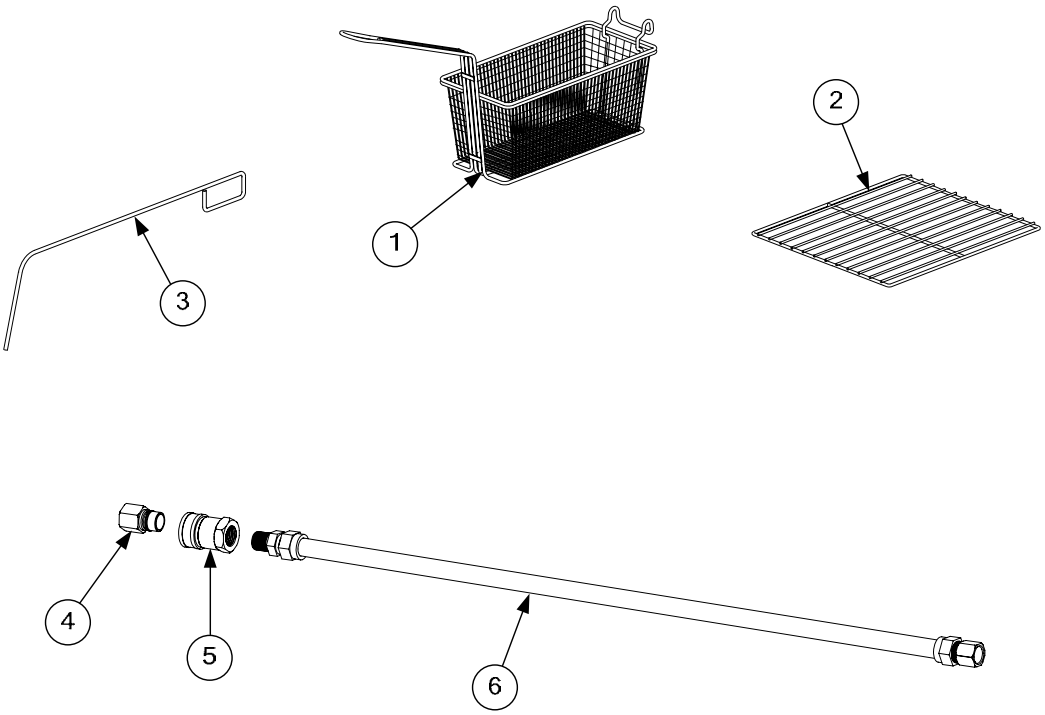

ITEM	PART #	COMPONENT
1		**Basket**
	803-0019	Twin Basket, J1C & J1X
	803-0271	Twin Basket, J2X
2		**Basket Support Rack**
	803-0030	Basket Support Rack, J1C & J1X
	803-0032	Basket Support Rack, J2X
3	803-0197	Frypot Cleanout Rod
4	810-0069	Quick Disconnect, ½" Male
5	810-0071	Quick Disconnect, ½" Female
6		**Flexible Gas Line**
	810-0081	Flexible Gas Line, ½" x 36"
	810-0082	Flexible Gas Line, ½" x 48"
*	812-1227	Drain Nipple

* Not illustrated.

8.5 Thermostat Components

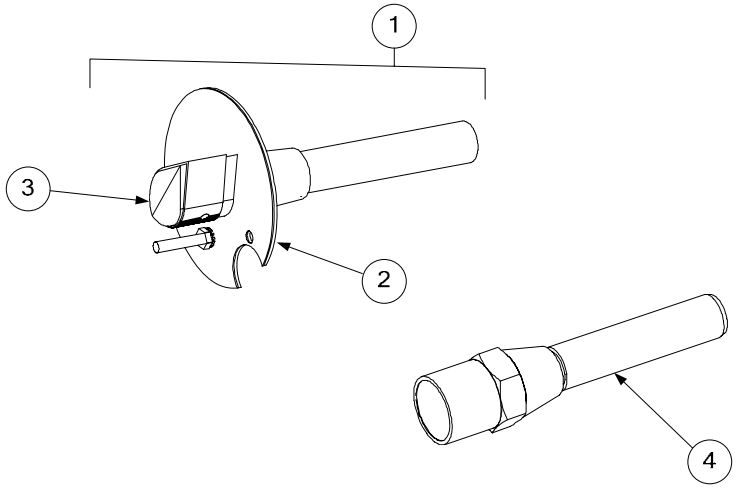

ITEM	PART #	COMPONENT
1	806-0138	Thermostat Assembly Kit (includes Items 2 and 3)
2	806-0087	Thermostat Dial Plate Assembly
3	810-0110	Thermostat Knob
4	826-1177	High-limit Thermostat Kit

THIS PAGE INTENTIONALLY LEFT BLANK

FRYMASTER
8700 LINE AVENUE, SHREVEPORT, LA 71106-6800

800-551-8633
318-865-1711
WWW.FRYMASTER.COM
EMAIL: FRYSERVICE@WELBILT.COM

Welbilt offers fully-integrated kitchen systems and our products are backed by KitchenCare® aftermarket parts and service. Welbilt's portfolio of award-winning brands includes **Cleveland™, Convotherm®, Crem®, Delfield®, fitkitchen®, Frymaster®, Garland®, Kolpak®, Lincoln®, Merco®, Merrychef® and Multiplex®.**

Bringing innovation to the table • **welbilt.com**

©2022 Welbilt Inc. except where explicitly stated otherwise. All rights reserved. Continuing product improvement may necessitate change of specifications without notice.

Part Number FRY_IOSP_8196513 06/2022