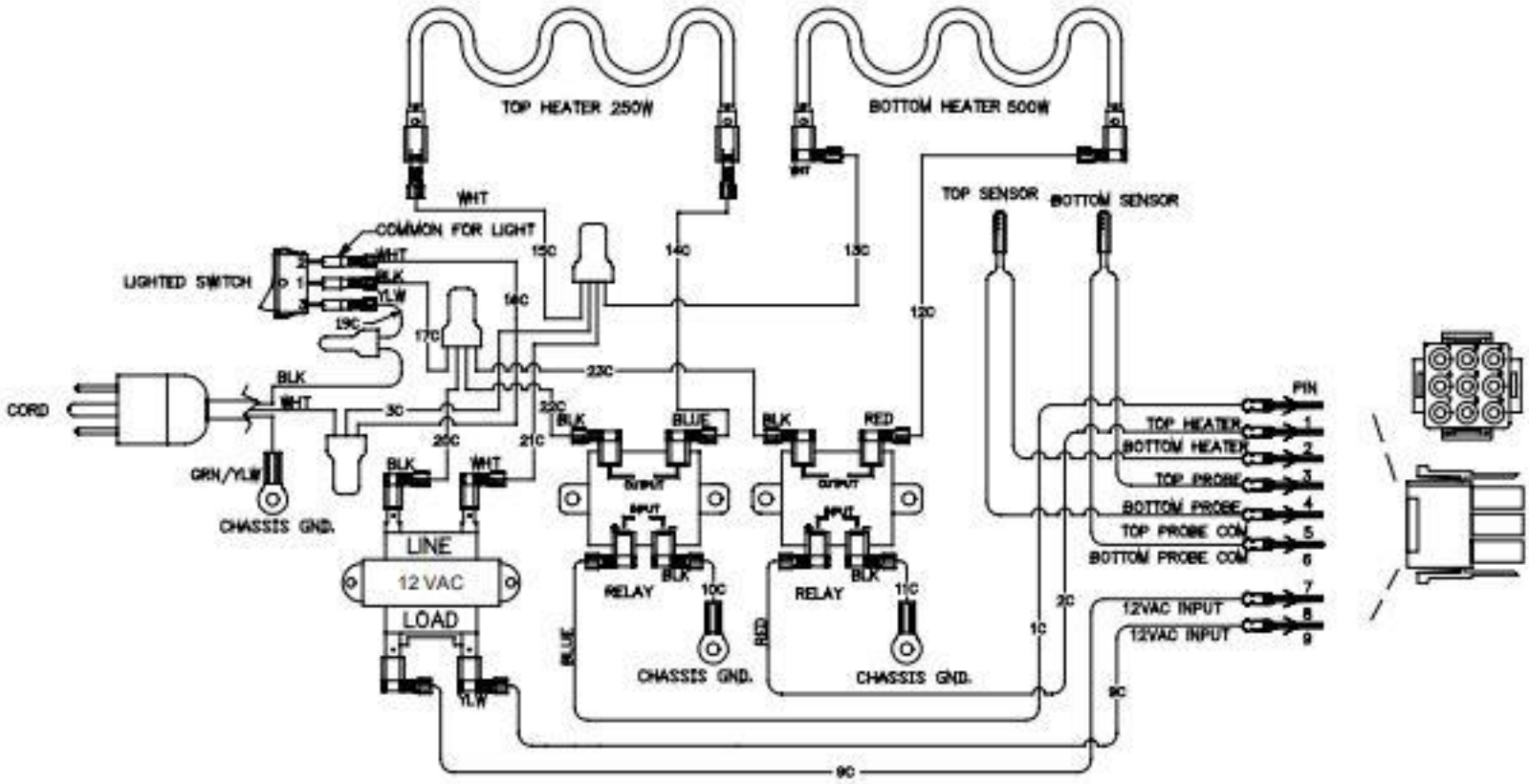
TOP HEATER 250W
BOTTOM HEATER 500W
WHT
COMMON FOR LIGHT
LIGHTED SWITCH
WHT
BLK
YLW
15C
14C
13C
12C
19C
17C
22C
CORD
BLK
WHT
3C
25C
21C
GRN/YLW
CHASSIS GND.
BLK
WHT
LINE
12 VAC
LOAD
YLW
BLK
BLUE
OUTPUT
INPUT
RELAY
BLK
10C
CHASSIS GND.
BLUE
BLK
RED
OUTPUT
INPUT
RELAY
BLK
11C
CHASSIS GND.
RED
TOP SENSOR
BOTTOM SENSOR
PIN
TOP HEATER
BOTTOM HEATER
TOP PROBE
BOTTOM PROBE
TOP PROBE COM
BOTTOM PROBE COM
12VAC INPUT
12VAC INPUT
2C
1C
9C
9C

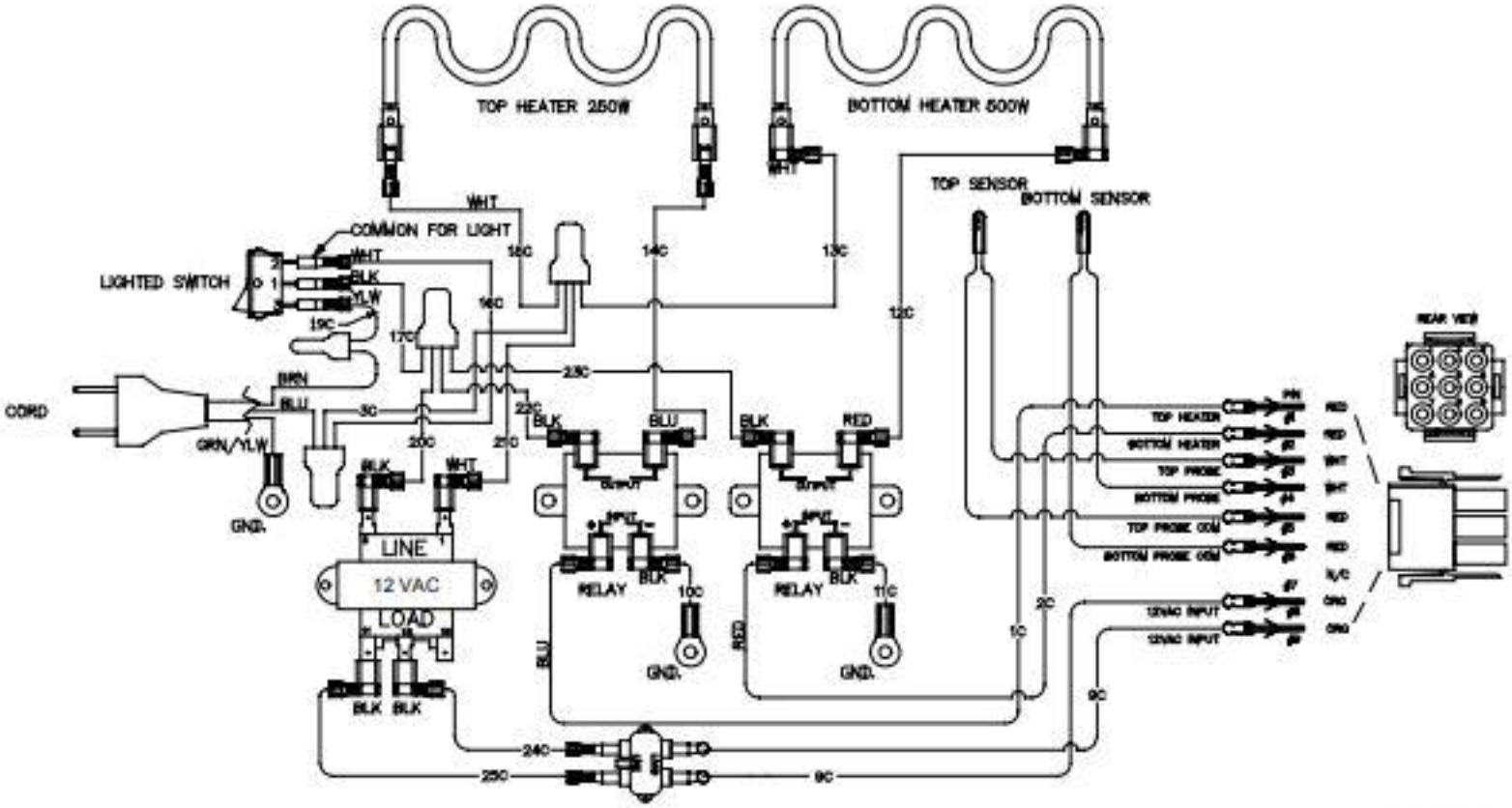
TOP HEATER 250W
BOTTOM HEATER 500W
WHT
COMMON FOR LIGHT
LIGHTED SWITCH
WHT
BLK
YLW
19C
17C
16C
14C
13C
12C
TOP SENSOR
BOTTOM SENSOR
REAR VIEW
CORD
BRN
BLU
GRN/YLW
GND.
3C
20C
21C
22C
23C
BLK
WHT
BLU
RED
LINE
12 VAC
LOAD
RELAY
10C
11C
1C
2C
9C
24C
25C
TOP HEATER
BOTTOM HEATER
TOP PROBE
BOTTOM PROBE
TOP PROBE COM
BOTTOM PROBE COM
12VAC INPUT
12VAC INPUT