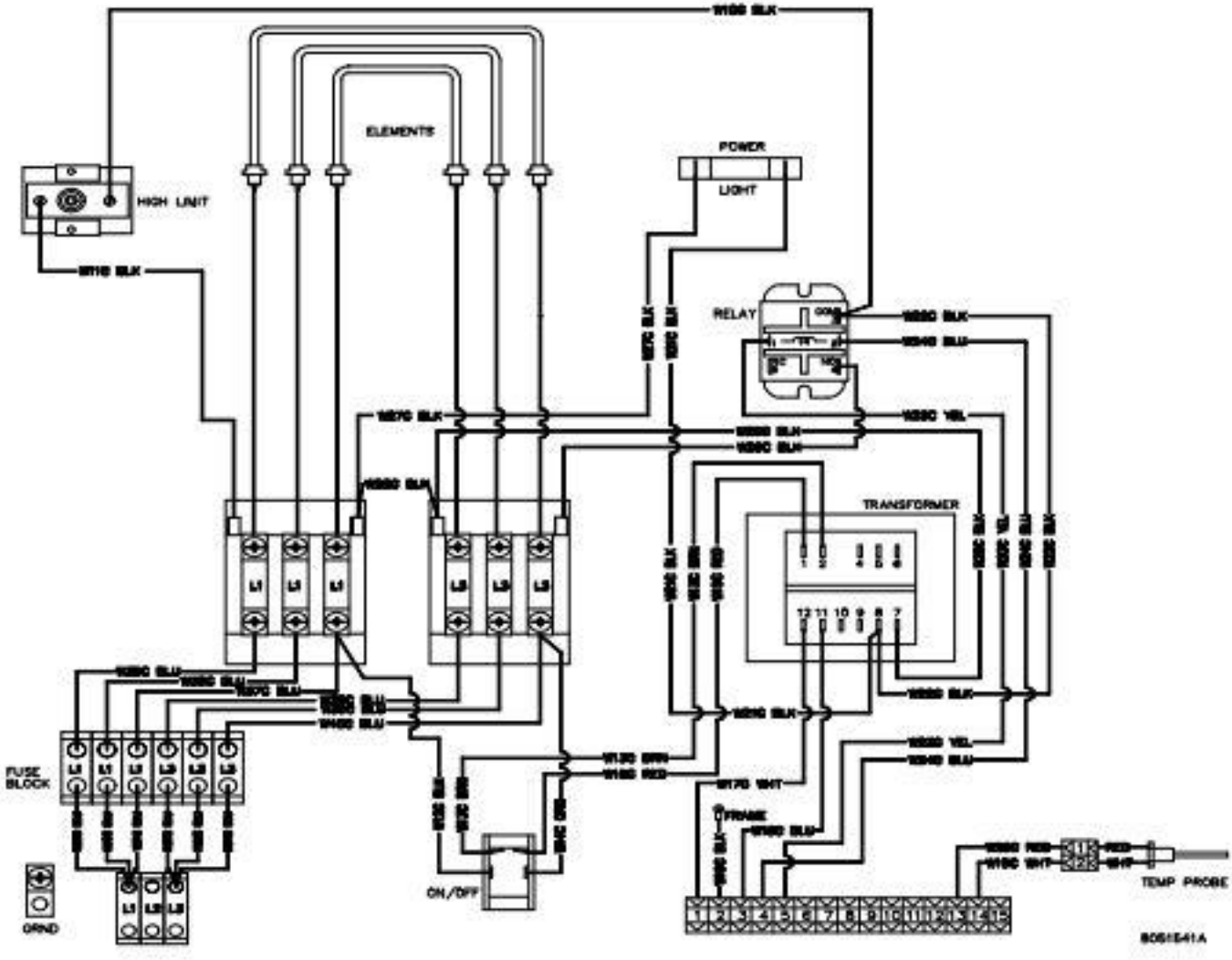
ELEMENTS
HIGH LIMIT
POWER
LIGHT
RELAY
TRANSFORMER
FUSE BLOCK
GRND
ON/OFF
FRAME
TEMP PROBE
L1
L2
L3

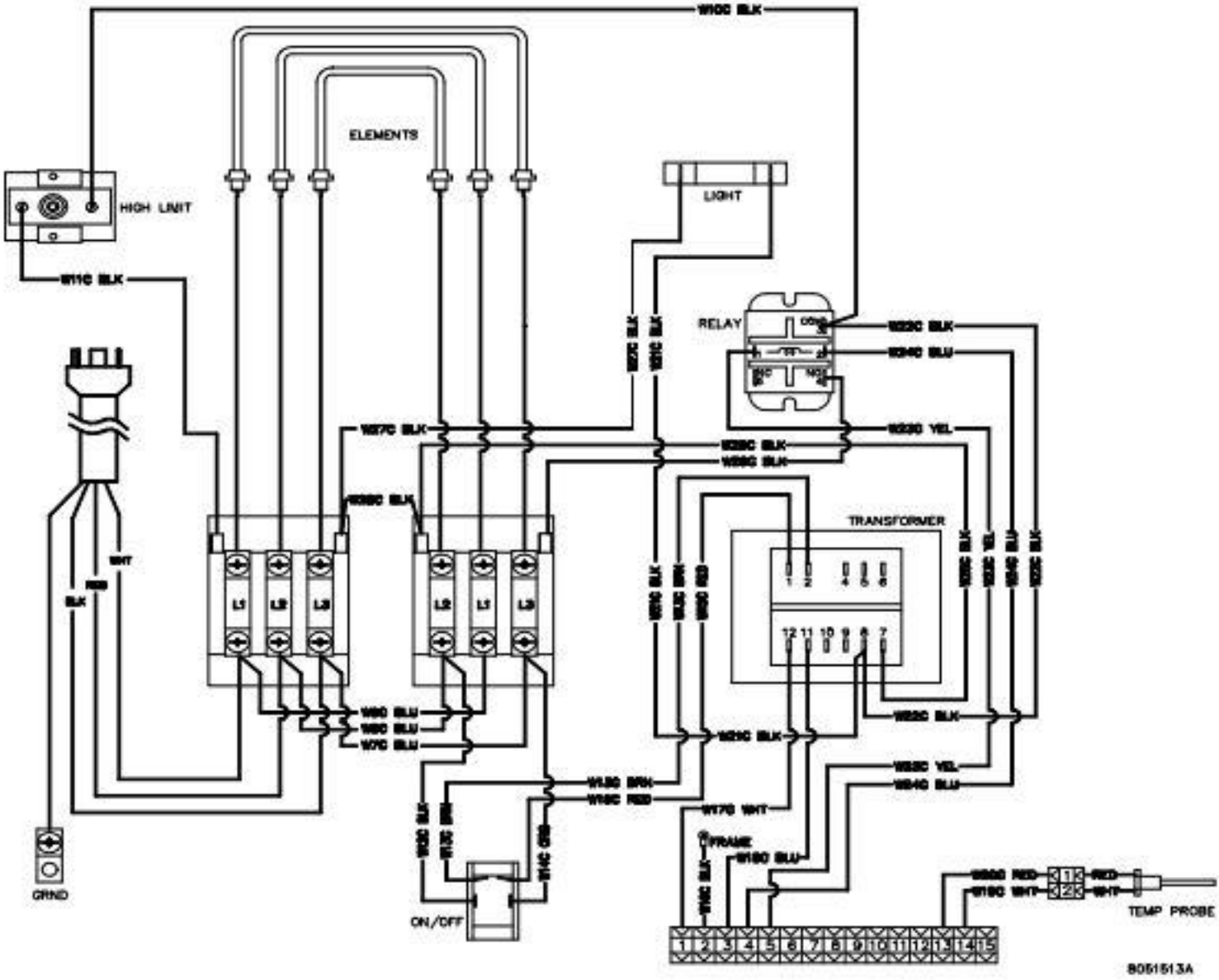
W100 BLK
ELEMENTS
HIGH LIMIT
W11C BLK
LIGHT
RELAY
W22C BLK
W24C BLU
W27C BLK
W28C BLK
W29C BLK
W23C YEL
TRANSFORMER
L1
L2
L3
WHT
RED
BLK
W80 BLU
W90 BLU
W70 BLU
W21C BLK
W22C BLK
W23C YEL
W24C BLU
W150 BRN
W160 RED
W170 WHT
FRAME
W180 BLU
W190 BLK
W200 RED
W210 WHT
TEMP PROBE
GRND
ON/OFF
8051513A

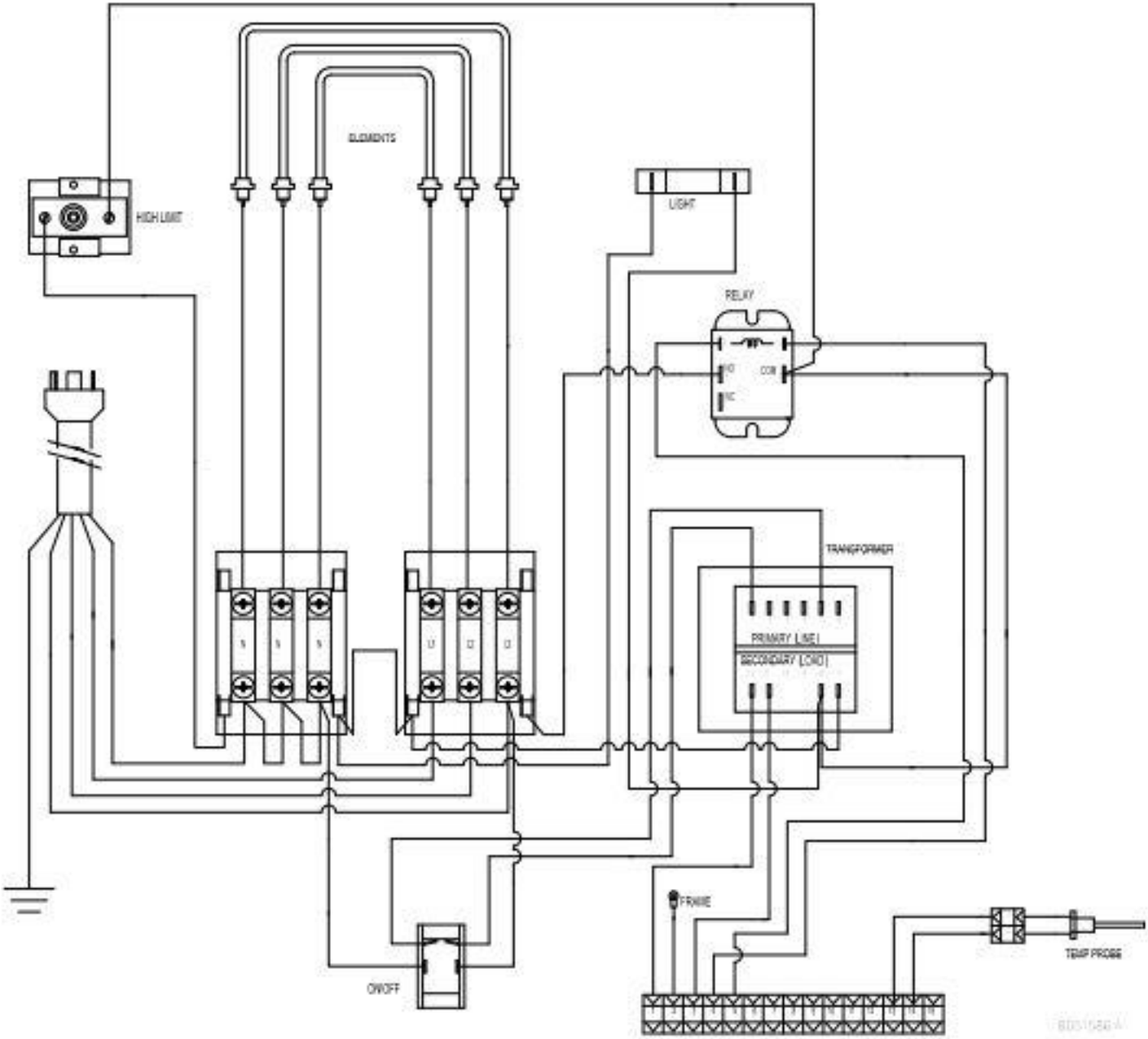
ELEMENTS
HIGH LIMIT
LIGHT
RELAY
NO
COM
NC
TRANSFORMER
PRIMARY (LINE)
SECONDARY (LOAD)
FRAME
TEMP PROBE
ON/OFF