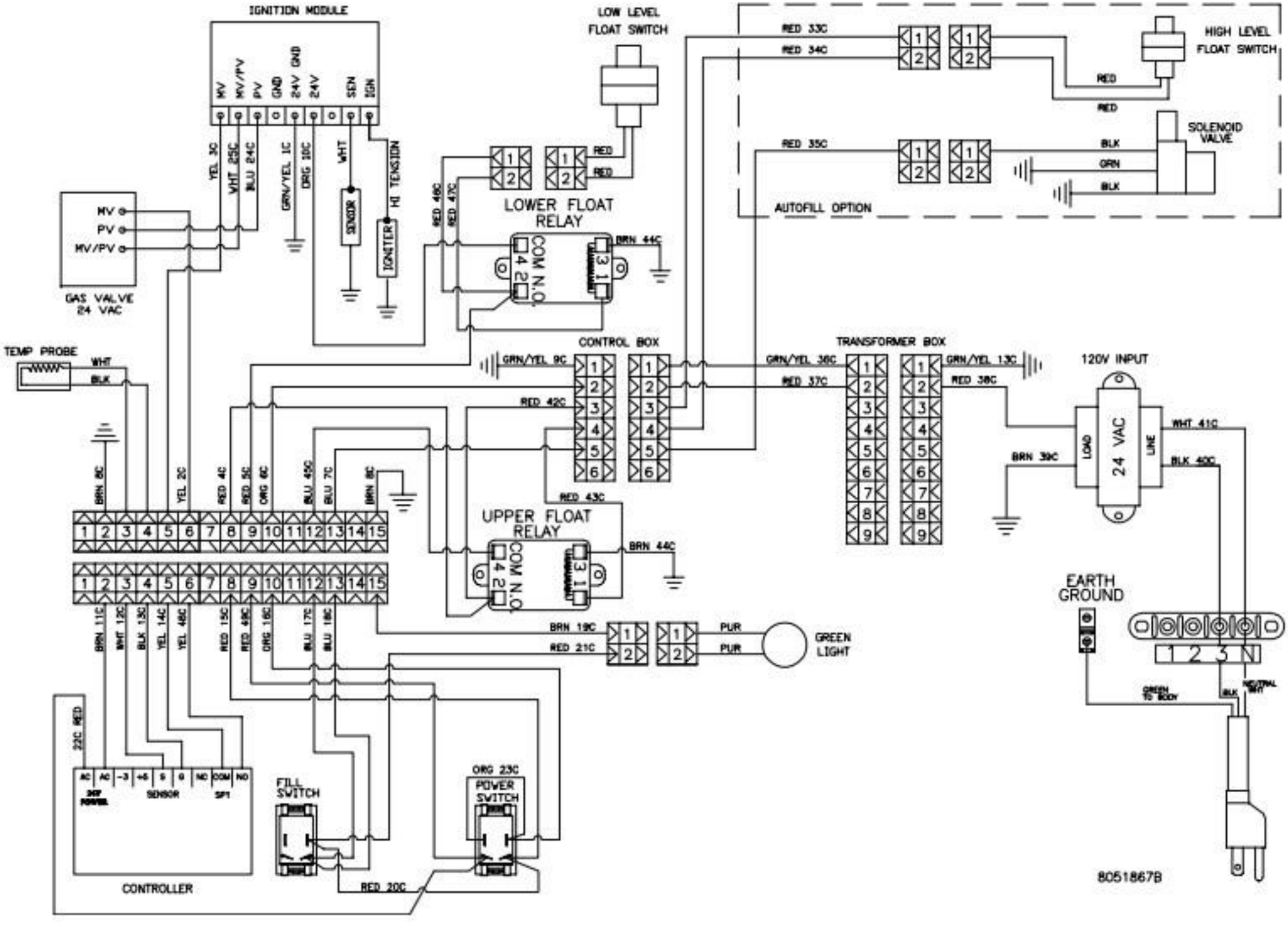
IGNITION MODULE
MV
MV/PV
PV
GND
24V GND
24V
SEN
IGN
YEL 3C
WHT 25C
BLU 24C
GRN/YEL 1C
ORG 10C
WHT
SENSOR
HI TENSION
IGNITER
MV
PV
MV/PV
GAS VALVE
24 VAC
TEMP PROBE
WHT
BLK
LOW LEVEL
FLOAT SWITCH
RED
RED
RED 46C
RED 47C
LOWER FLOAT
RELAY
COM N.O.
BRN 44C
CONTROL BOX
GRN/YEL 9C
RED 42C
RED 43C
UPPER FLOAT
RELAY
COM N.O.
BRN 44C
RED 33C
RED 34C
RED 35C
HIGH LEVEL
FLOAT SWITCH
RED
RED
SOLENOID
VALVE
BLK
GRN
BLK
AUTOFILL OPTION
TRANSFORMER BOX
GRN/YEL 36C
RED 37C
GRN/YEL 13C
RED 38C
120V INPUT
LOAD
24 VAC
LINE
WHT 41C
BLK 40C
BRN 39C
BRN 8C
YEL 2C
RED 4C
RED 5C
ORG 6C
BLU 49C
BLU 7C
BRN 8C
BRN 11C
WHT 12C
BLK 13C
YEL 14C
YEL 48C
RED 15C
RED 49C
ORG 16C
BLU 17C
BLU 18C
BRN 19C
RED 21C
PUR
PUR
GREEN
LIGHT
EARTH
GROUND
1 2 3 N
GREEN
TO BODY
BLK
NEUTRAL
WHT
22C RED
AC
AC
-3
+5
S
G
NO
COM
NO
SENSOR
SPT
CONTROLLER
FILL
SWITCH
ORG 23C
POWER
SWITCH
RED 20C
8051867B