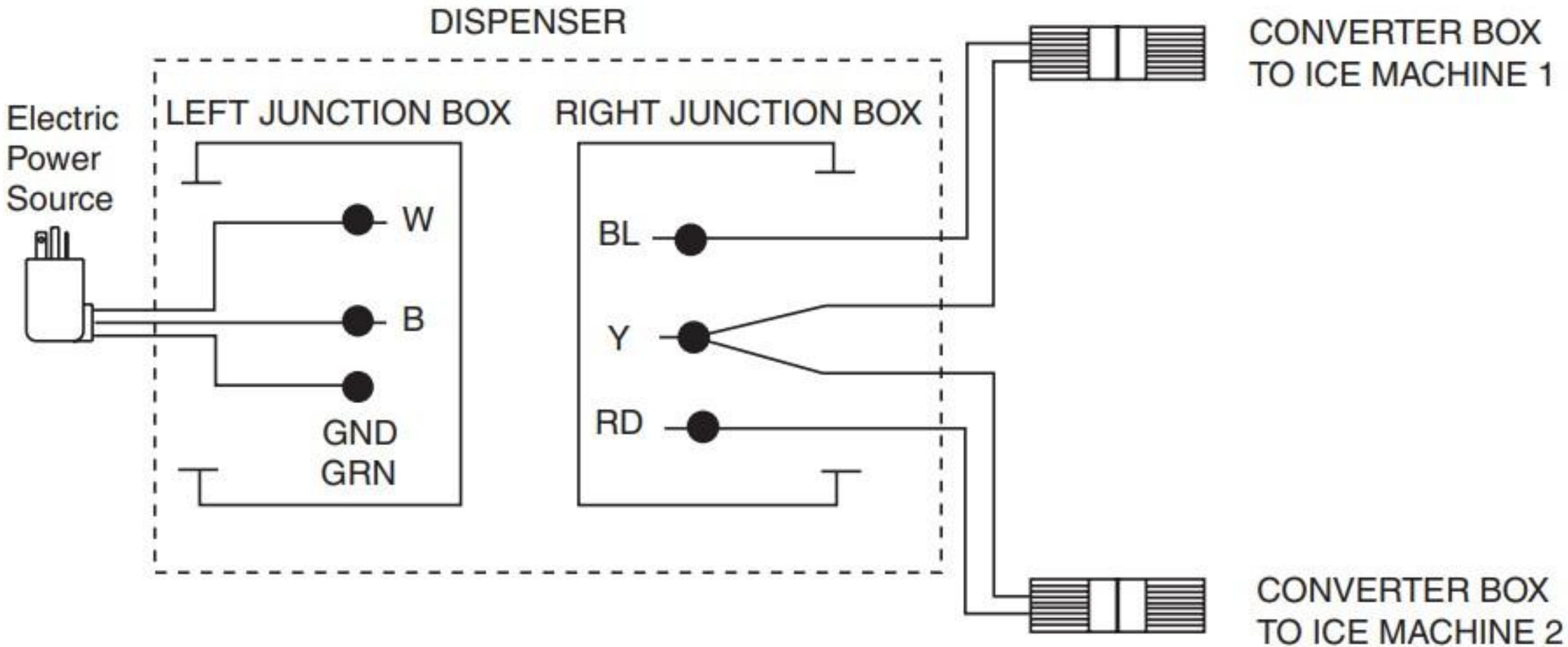
DISPENSER
Electric
Power
Source
LEFT JUNCTION BOX
RIGHT JUNCTION BOX
W
B
GND
GRN
BL
Y
RD
CONVERTER BOX
TO ICE MACHINE 1
CONVERTER BOX
TO ICE MACHINE 2

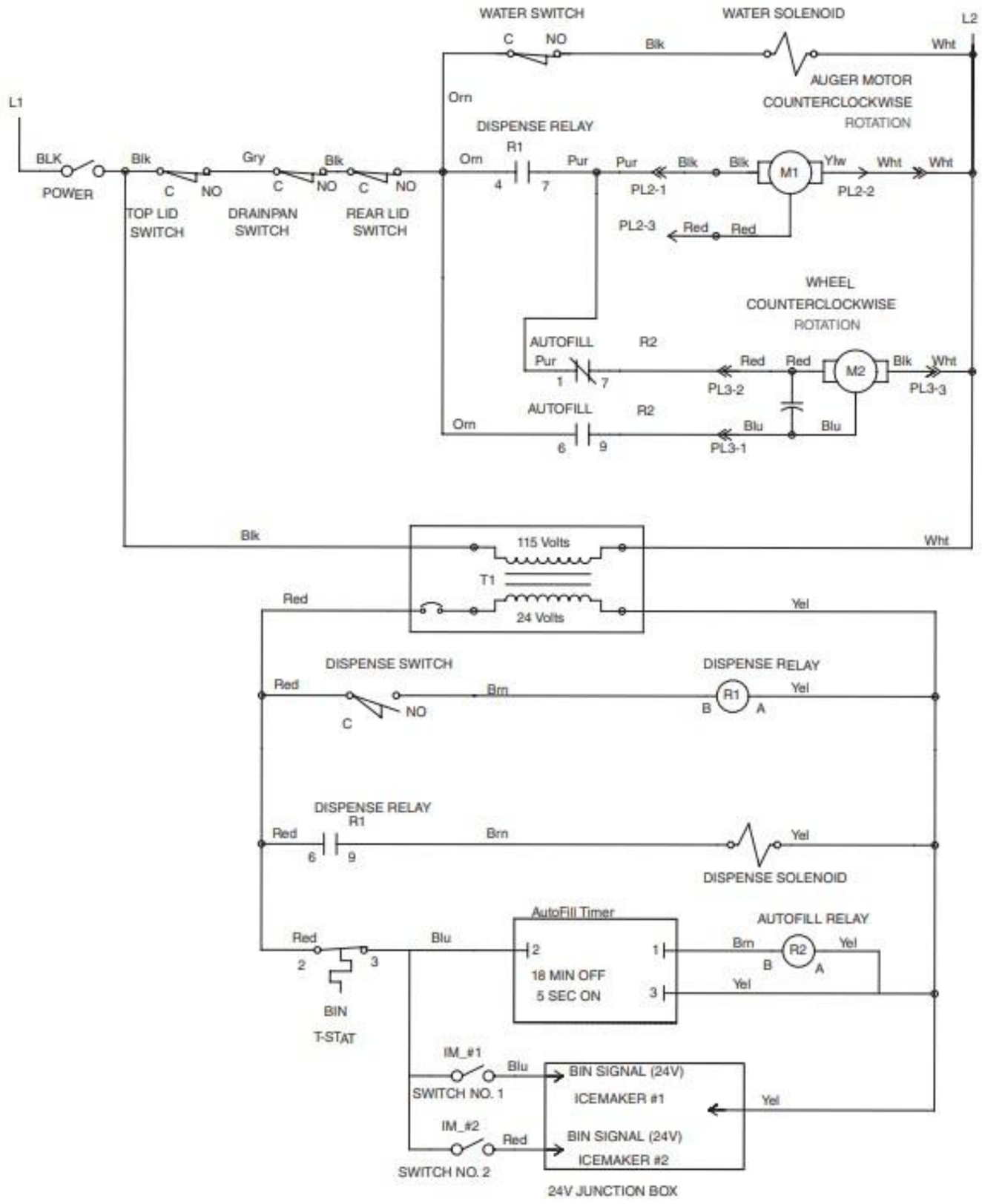
WATER SWITCH
C NO
Blk
WATER SOLENOID
L2
Wht
AUGER MOTOR
COUNTERCLOCKWISE
ROTATION
L1
Orn
DISPENSE RELAY
R1
BLK
POWER
Blk
C NO
TOP LID
SWITCH
Gry
C NO
DRAINPAN
SWITCH
Blk
C NO
REAR LID
SWITCH
Orn
4
7
Pur
Pur
PL2-1
Blk
Blk
M1
Ylw
Wht
Wht
PL2-2
PL2-3
Red
Red
WHEEL
COUNTERCLOCKWISE
ROTATION
AUTOFILL
R2
Pur
1
7
Red
Red
M2
Blk
Wht
PL3-2
PL3-3
AUTOFILL
R2
Orn
6
9
Blu
Blu
PL3-1
Blk
Wht
115 Volts
T1
24 Volts
Red
Yel
DISPENSE SWITCH
Red
C
NO
Brn
DISPENSE RELAY
R1
B
A
Yel
DISPENSE RELAY
R1
Red
6
9
Brn
Yel
DISPENSE SOLENOID
AutoFill Timer
Red
2
3
BIN
T-STAT
Blu
2
18 MIN OFF
5 SEC ON
1
3
AUTOFILL RELAY
Brn
R2
B
A
Yel
Yel
IM_#1
Blu
SWITCH NO. 1
BIN SIGNAL (24V)
ICEMAKER #1
Yel
IM_#2
Red
SWITCH NO. 2
BIN SIGNAL (24V)
ICEMAKER #2
24V JUNCTION BOX

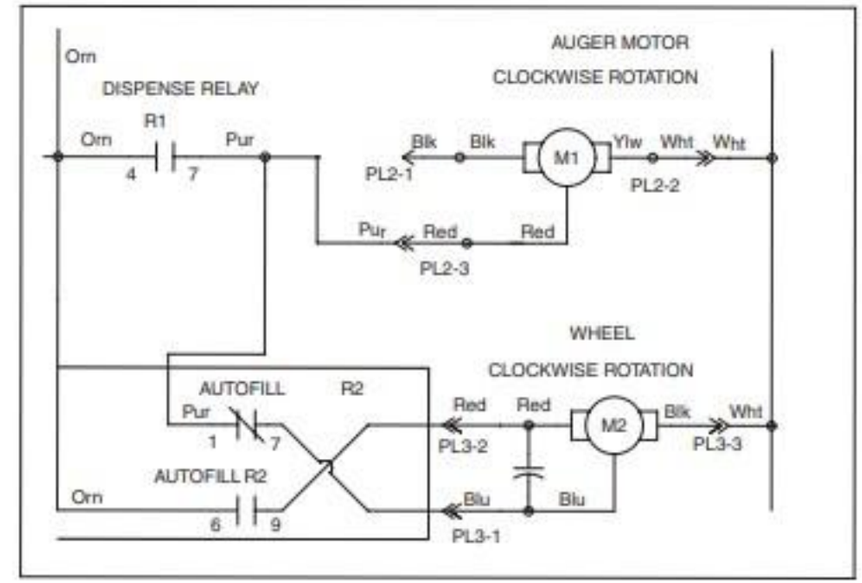
Orn
DISPENSE RELAY
R1
Orn
4
7
Pur
AUGER MOTOR
CLOCKWISE ROTATION
Blk
Blk
PL2-1
M1
Ylw
Wht
Wht
PL2-2
Pur
Red
Red
PL2-3
WHEEL
CLOCKWISE ROTATION
AUTOFILL
R2
Pur
1
7
Red
Red
M2
Blk
Wht
PL3-2
PL3-3
AUTOFILL R2
Orn
6
9
Blu
Blu
PL3-1

LEGEND:
TERMINAL STRIP CONNECTION
PIN and SOCKET CONNECTION