Garland

Induction Designer Series
R·T·C·S® mp Built-In Line Single Zone Griddle

Installation, Operation and Maintenance Manual

models

GI-SH/GR/IN 3500
GI-SH/GR/IN 5000

Original Instructions

Part Number 4532291 Rev 3 12/15

Manitowoc

READ THIS MANUAL

⚠ Warning

Read this manual thoroughly before installing, operating, or performing maintenance on the equipment. Failure to follow instructions in this manual can cause property damage, injury or death.

This manual must always be available for reference at the place of operation.

This manual is intended for kitchen consultants, cabinet designers, fabricators, installers, owners and operators of our appliances.

Owners, consultants, fabricators and designers:

In order for the induction appliance to function safely and normally, you must read and understand all specific and critical requirements when designing the location and the counter for the appliance.

Installers, operators and staff:

For your safety and safety of the others, you must observe all safety instructions during installation, operation and maintenance of the equipment.

Should you require technical assistance, call your factory authorized service agent or distributor. **Always have your model and serial number available when you call**.

Your Factory Authorized Service Agent

Service Agent Telephone Number

Your Local Equipment Supplier

Supplier Telephone Number

Model Number

Serial Number

Date of Installation

ABOUT THIS MANUAL

Throughout this manual, the induction appliance model indicated on the cover page is referred to as **appliance**, **induction appliance** or **equipment.**

A period (.) is used in this manual as the decimal separator.

Original measurements are in metrics. Measurements in imperial are provided for reference.

Not ALL models, options and accessories are available in all geographical regions. Please consult your local equipment supplier for the availability of the specific products in your region.

INSPECT THE SHIPMENT

Thoroughly inspect the equipment upon delivery. Immediately report to the delivery carrier, any damage that occurred during transportation and request for a written inspection report from a claim inspector.

Your shipment might include small packages of fasteners or silicone strips for installation. Keep all packages.

KEEP THE PACKING SLIP

The packing slip attached to the shipment contains detailed information on all components. Keep the packing slip for reference.

Safety Notices

DEFINITIONS

⚠ DANGER

Indicates a hazardous situation that, if not avoided, will result in death or serious injury. This applies to the most extreme situations.

⚠ Warning

Indicates a hazardous situation that, if not avoided, could result in death or serious injury.

⚠ Caution

Indicates a hazardous situation that, if not avoided, could result in minor or moderate injury.

Notice

Indicates information considered important, and is used to address practices not related to physical injury. For example, messages relating to property damage.

NOTE: Indicates useful, extra information about the procedure you are performing.

Reference: ANZI Z535.6-2011

SAFETY SYMBOLS AND WARNINGS ON THE APPLIANCE

⚠	This symbol alerts you to a hazardous situation that WILL or COULD cause serious bodily harm or death. Be alert and implement relevant safety precautions.
⚡	**DANGER - HIGH VOLTAGE** This dangerous voltage warning symbol indicates a risk of electric shock and hazards from dangerous voltage.
(((•)))	**Electromagnetic Field**

⚠ **Warning** ⚡

RISK OF FIRE OR ELECTRIC SHOCK! DO NOT OPEN!
To reduce the risk of fire or electric shock, do not remove or open cover. No user serviceable parts inside.
Refer servicing to qualified personnel.

CAUTION ⚠ ATTENTION
DISCONNECT FROM SUPPLY CIRCUIT BEFORE OPENING

DISCLAIMERS

⚠ DANGER

Disregarding any safety instructions may cause harm to people, the surroundings, and the equipment. Garland is not responsible for any damages or personal injury caused by failure to observe any safety requirements. Risks involved when disregarding safety precautions include, but not limiting to:

- Death or injury caused by electric shock.
- Burn injury caused by contacting overheated cooking surface, cookware, or oil and grease.
- Damage to the equipment caused by using unsuitable cookware.

⚠ DANGER

Do not install or operate equipment and/or accessories that have been misused, abused, neglected, damaged, or altered from that of original manufactured specifications.

⚠ DANGER

Contact the manufacturer if you intend to make any changes on the equipment. For safety reasons, always use genuine parts and accessories approved by the manufacturer or authorized representative. Refer to the warranty documents for your equipment.

⚠ DANGER

Owners and operators are cautioned that maintenance and repairs must be performed by an authorized service agent using only genuine replacement parts. The manufacturer will have no obligation with respect to any product that has been improperly installed, adjusted, operated or not maintained in accordance with national and local codes and/or installation instructions provided with the product or any product that has its serial number defaced, obliterated or removed, and/or which has been modified or repaired using unauthorized parts or by unauthorized service agents.

⚠ DANGER

Improper installation, adjustment, alteration, service, or maintenance of this appliance or installation of a damaged appliance can result in DEATH, INJURY, EQUIPMENT DAMAGE, and void the warranty.

⚠ DANGER

All utility connections and fixtures must be maintained in accordance with local and national codes.

⚠Warning

Do not store or use gasoline or other flammable vapors or liquids in the vicinity of this or any other appliance. Never use flammable oil soaked cloths or combustible cleaning solutions for cleaning.

⚠Warning

This appliance is not intended for use by persons (including children) with reduced physical, sensory or mental capabilities, or lack of experience and knowledge, unless they have been given supervision concerning use of the appliance by a person responsible for their safety. Do not allow children to play with this appliance.

⚠Warning

This product contains chemicals known to the State of California to cause cancer and/or birth defects or other reproductive harm. Operation, installation, and servicing of this product could expose you to airborne particles of glass-wool or ceramic fibers, crystalline silica, and/or carbon monoxide. Inhalation of airborne particles of glass-wool or ceramic fibers is known to the State of California to cause cancer. Inhalation of carbon monoxide is known to the State of California to cause birth defects or other reproductive harm.

⚠Warning

Authorized Service Representatives are obligated to follow industry standard safety procedures, including, but not limited to, local/national regulations for disconnection / lock out / tag out procedures for all utilities including electric, gas, water and steam.

Notice

This appliance is not approved or authorized for home or residential use, but is intended for commercial applications only. The manufacturer and/or authorized representative will not provide service, warranty, maintenance or support of any kind other than in commercial applications.

Notice

Routine adjustments and maintenance procedures outlined in this manual are not covered by the warranty.

NOTE: Proper installation, care and maintenance are essential for maximum performance and trouble-free operation of your equipment. Visit our website www.mtwkitchencare.com for manual updates, translations, or contact information for service agents in your area.

CORRECT DISPOSAL OF THIS PRODUCT

This marking shown on the product indicates that the product should not be disposed as household waste or regular commercial waste. Instead it shall be handed over to the applicable collection point for the recycling of electrical and electronic equipment. By ensuring this product is disposed correctly, you will help prevent potential harm to the environment or human health, which could otherwise be caused by inappropriate waste handling of this product.

For more detailed information regarding recycling of the product, please contact your local city office or your waste disposal service.

⚠ DANGER

Induction appliances, sent for disposal, can be brought back into operation and their use must be avoided.

NOTE: The appliance is built with common electrical, electromechanical and electronic parts. No batteries are used.

NOTE: The owner and operator are responsible for the proper and safe disposal of the appliance.

Table of Contents

Safety Notices

Definitions....3
Safety symbols and Warnings on the Appliance....3
Disclaimers....3
Correct Disposal of This Product....4

Table of Contents

Section 1
General Information

Description of Product....7
Application....7
Compliances....7
Components and Features....7
Serial Plate Location....8
Model Number....8
Serial Number....8
Accessories....8

Section 2
Installation

Installation safety—Disclaimer....9
Installation Safety—Clearance and Ventilation....9
Personal Protection....10
Installation Safety—Electrical....10
Installation Safety—Custom Built structure....11
Exploded View of a Typical Installation....11
Planning for Installation....12
Cabinet Requirements....12
Ventilation Methods....14
Typical Applications....16
Grease Drawer and Grease Chute Extension....21
Grease Drawer Design Criteria....21
Grease Chute Extension Design Criteria....21
Specifications....22
Dimension Table....22
Dimensions: SH/GR/IN....22
Dimensions: Mounting Frame 95000068....23
Dimensions: Control Unit....24
Dimensions: Grease drawer Part Number 4529777 (Not Provided)....25
Cut-out dimensions: Countertop for SH/GR/IN....26
Cut-out dimensions: Holes and Studs for Control Unit....27
Cut-Out Dimensions: Air Intake Kit Air Filter Holder....27
Installation Clearance....28
Parallel installation and clearance....28
Electrical Specifications....29
Electrical Cables....29
Operating Conditions....29
Weights....29
Installation Instructions....30
Installing the Griddle Assembly....30

Installing the Control Unit 32
Installing the Air Intake Kit (P/N 95000021) 32
Connecting the Components 33
Function Test 34

Section 3 Operation

Operation Safety—Disclaimer 35
Operation Safety—Personal Protection 35
Important Rules—Operation and Maintenance 37
Temperature Control and Display 38
Digital Display 38
Considerations 38
When Appliance Is Idle 38
Short Cook Time 38

Section 4 Maintenance

Maintenance Safety—Disclaimer 39
Dangerous Electrical Voltage 39
Maintenance Safety—Cleaning 39
Personal Protection 40
Daily Cleaning and Maintenance 41
Stainless Steel case 41
Visual Inspection of Silicone Seal 41
Grease drawer 41
Drain Plug (Braising Pan Equipment) 41
Cleaning the Griddle Plate / braising pan 41
Weekly Cleaning and Maintenance 42
Air Intake Filter, Counter-top / Module-Line Models 42
Air Intake Filter, Built-In Models 42
Yearly Maintenance 42

Section 5 Troubleshooting

Dangerous Electrical Voltage 43
Common Problems 43
Symptoms 43
Boil Test 43
Troubleshooting Without Error Code / Flash Code 44
Troubleshooting — Error Code / Flash Code 44
Wearable Parts List 46

Section 1
General Information

Description of Product

Built with a robust construction, our induction appliances are compact and powerful with the revolutionary RTCS® or RTCSmp® Technology (Realtime Temperature Control System).

The RTCS®/RTCSmp® Technology monitors continuously in realtime, the energy supply, temperature of the cook zone, and the state of the components such as the induction coil. This monitoring system ensures the most efficient energy transfer, as well as maximizes safety:

- When a malfunction occurs, the integrated fault diagnostic system reports the malfunction instantly

Application

The RTCS®/RTCSmp® induction appliances are designed to be incorporated into a custom-built counter or an island suite. See section 2 Installation.

The patented[1] induction RTCSmp® Griddles are engineered for cooking a large variety of meals throughout the day.

Many applications are possible because:

- Instant energy transmission from inverter coil to griddle plate surface allows for fast startup time.
- Heat distribution is even from corner to corner, across the entire cooking surface.
- The cooking surface is controlled and monitored by multiple sensors. Instantaneous temperature recovery is feasible.
- The griddle plate is coated with a polished HPCR-INOX layer, which is resistant to abrasion, chemical, corrosion, and heat. This feature strengthens the griddle plate and minimizes cleaning time in between meal preparations throughout the day.

[1] Europatent EP 0858722, Swiss Patent 695817, US 7183525 B2

Compliances

Intertek Intertek

- **North American models**:

  ETL listed in compliance with UL 197, CSA C22.2 No.109, NSF-4. Complies with FCC part 18, ICES-001

- **CE models** comply with the latest European Norms:

  EN 60335-1, EN 60335-2-36, EN 62233 (EMC/EMV)

Components and Features

1. **One (1) Induction Single Zone Griddle, Complete Assembly**

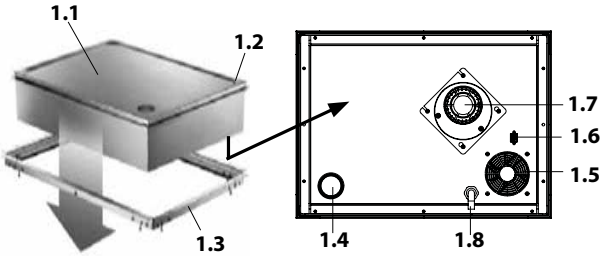

1.1	Griddle plate, with a polished HPCR-INOX coating.
1.2	Rim structure to support the appliance for both drop-in and flush mount installation.
1.3	A mounting frame is provided to install the appliance flush with the counter surface.
1.4	Grease chute.
1.5	Air exhaust vent.
1.6	CAN/BUS port, provides communication link between the control unit and the induction generator.
1.7	Fan, pulls in fresh cooling air from the bottom to cool the electronics.
1.8	Power supply cable. 1.8-meter [6-foot] cord and plug included.

2. **One (1) Control Unit**, complete assembly.

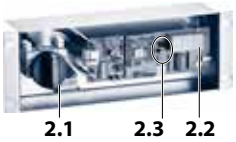

2.1	Rotary power switch, allows for continuously variable power adjustment.
2.2	Digital display • Shows the set temperature and the actual temperature in either Fahrenheit or Celsius (specified as ordered). • Displays error code when a malfunction occurs.
2.3	Service interface, provides service technician a wireless connection to diagnose problems.

3. **One (1) Fresh Air Intake Kit**

   Part Number = 95000021.

- Air kit connects directly to the bottom of the unit.
- The air duct separates fresh intake air from hot exhaust.
- The air filter cleans the intake air. The filter is removable, reusable and dishwasher-safe.
- Silicone sealant is provided for installation.

4. **Grease Drawer**

   Customers are responsible for providing a suitable grease-collecting means for the appliance. See section Grease Drawer and Grease Chute Extension on page 21

Serial Plate Location

The serial plate specifies the model number, serial number, and electrical specifications of the appliance.

See illustration below for location

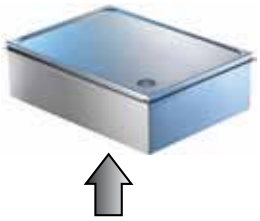

Model Number

The model number is located on the serial plate. This manual covers the following models:

SH/GR/IN 3500
SH/GR/IN 5000

READING THE MODEL NUMBER

Example: **SH/GR/IN 3500**

❶ ❷ ❸ ❹

1	Product Series	**BH** = Baby Hob **SH** = Slim Hob
2	Function	**GR** = Griddle Line
3	Built-In	**IN** = Built-In Line
4	Power (Watt)	**3500, 5000**

MARKETING IDENTIFIER

Marketing identifier is used when specifying the product on specification sheet and other marketing literature. This product is identified as:

GI-SH/GR/IN 3500

GI-SH/GR/IN 5000

Serial Number

The serial number is located on the serial plate.

READING THE SERIAL NUMBER

Example: **BA01 . 00014 . 1214**

❶ ❷ ❸ ❹ ❺

1	Type of induction appliance: **BA** = Base Line Series (Counter-Top Cook-Top) **IN** = Built-In Series **WO** = Counter Wok Series **MO** = Module Line Series **HO** = Hold Line Series **GR** = Griddle Line Series
2	Last two(2) or three(3) digits of the appliance article number or part number that can be found on the invoice or the packing slip.
3	A sequential number: • A 4-digit sequence number indicates that the appliance is not RTCS® nor RTCSmp®. • A 5-digit sequence number indicates that the appliance is either a RTCS® or RTCSmp® appliance. • A RTCSmp® appliance is marked as such on the serial plate.
4	Month of manufacture: **01**, **02**, **03**, **04**, ...
5	Year of manufacture: 2014 (**14**), 2015 (**15**), ...

Accessories

Accessories included with your appliance:

Photo	Part Number	Description
	72400040	Splash Guard, Single
	72205012	Cleaning Pad
	72205013	Griddle Spatula

Section 2
Installation

INSTALLATION SAFETY—DISCLAIMER

⚠ DANGER

Installation must be carried out by registered installation contractors only.

The contractors are responsible for interpreting all instructions correctly and performing the installation in compliance with all applicable national and local regulations.

The warning signs and serial plates on the equipment must strictly be followed.

⚠ Warning

This equipment is intended for indoor use only. Do not install or operate this equipment in outdoor areas.

⚠ Warning

To avoid instability, the installation area must be capable of supporting the combined weight of the equipment and food product. The equipment must be level side to side and front to back.

⚠ Caution

Consultants, fabricators and designers must consult their counter-top suppliers when designing an appropriate support structure and clearance for the counter-top and the installation.

Notice

Induction equipment that is not installed correctly will have warranty voided.

INSTALLATION SAFETY—CLEARANCE AND VENTILATION

⚠ DANGER

Risk of Fire or Shock or Equipment Failure

All minimum clearances must be maintained. Air intake vents and exhaust vents must not be blocked or be restricted by the installation.

⚠ Caution

This equipment must only be operated under an approved ventilation system in accordance with all applicable national and local regulations. Exceptions may apply.

Notice

The maximum ambient temperature for the induction appliance to operate must not exceed 40°C [104°F].

Failure to provide adequate ventilation will cause the appliance to overheat, to reduce power, or to shutdown.

NOTE: Always maintain enough space between and around the equipment for maintenance and service.

INSTALLATION SAFETY—ELECTRICAL

⚠ DANGER

All electrical connections must be carried out by a certified electrical contractor, who is responsible for the correct rating and installation of the appliance. The contractor has to comply with all legal safety regulations and all applicable national and local electrical codes.

⚠ Warning

Markings and warning labels mounted directly on the equipment must be observed at all times and kept in a fully legible condition.

⚠ Warning

This equipment must be positioned so that the plug is accessible unless other means for disconnection from the power supply, such as circuit breaker or disconnect switch, is provided.

⚠ Warning

CE Induction Appliance only: If ground fault current protective switches are used, they must be provided with selective activation and designed for a minimum fault current of 30mA.

Notice

Ensure the supply voltage and the line current match the specifications given on the serial plate affixed to the appliance. Wrong voltage will damage the appliance. A stable power supply must be provided.

Notice

Always refer to the serial plate on the appliance to verify the electrical data. When the data listed on the serial plate is different than that listed in this manual, contact the manufacturer or the authorized representative.

Notice

All cables must be routed, protected and tension free.

PERSONAL PROTECTION

⚠ DANGER

All utilities (gas, electric, water and steam) must be OFF to all equipment and locked out of operation according to national/regional, as well as company approved practices during installation, maintenance and servicing. Always allow appliance to cool.

⚠ DANGER

Use appropriate safety equipment during installation, maintenance and servicing.

⚠ DANGER

Never stand, sit, or lean on the equipment! They are not designed to hold the weight of an adult, and may collapse or tip if misused in this manner.

⚠ DANGER

To avoid cardiac pacemaker malfunction, consult your physician or pacemaker manufacture about effects of electromagnetic field on your pacemaker.

⚠ Warning

Markings and warning labels mounted directly on the equipment must be observed at all times and kept in a fully legible condition.

⚠ Warning

Risk of burns from high temperatures. You may get burnt if you touch any of the parts during operation. Surfaces close to the cooking area including side panels may get hot enough to burn skin. Use extreme caution to avoid coming in contact with hot surfaces or hot grease. Wear personal protective equipment.

⚠ Caution

Use caution when handling metal surface edges of all equipment.

INSTALLATION SAFETY—CUSTOM BUILT STRUCTURE

⚠Warning

The induction appliance is designed to be installed into a custom built counter or an island suite.

The appliance includes a number of components that have to be installed separately. Customers are responsible for providing proper installation mounting for the components.

Read ALL SECTIONS carefully, comply with all requirements listed and ensure inspection is done by qualified personnel.

⚠Caution

A suitable grease-collecting means must be in place before operating appliance.

It is the responsibility of the customer and installer to interpret and comply with all applicable national and regional health and safety codes, and to provide a suitable grease-collecting means for the appliance.

Exploded View of a Typical Installation

Shown below is an installation of a drop-in application.

Mounting frame (not shown) is provided for flush-mount application.

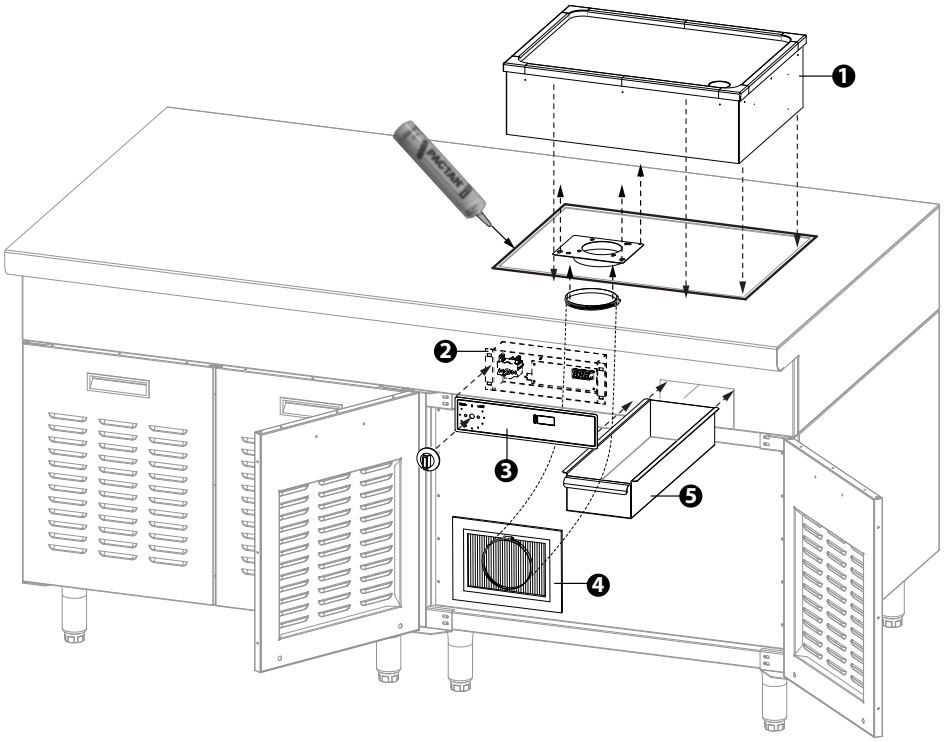

❶	Induction Built-In Griddle Assembly
❷	Control Unit
❸	Overlay (included)
❹	Fresh Air Intake Kit
❺	Grease Drawer (not included, part number 4529777). See Grease Drawer and Grease Chute Extension on page 21.

Planning for Installation

1 The induction appliance is designed to be installed into a custom built counter or an island suite. **You must plan ahead for the location, ventilation and electrical requirements** for the induction appliance. See sections:

- Electrical safety at the beginning of this chapter.
- Cabinet Requirements on page 12
- Typical Applications on page 16
- Specifications on page 22

2 At the design stage, it is important to **consult your electrical contractor** to ensure your cabinet design and installation will meet all applicable electrical and safety codes. See sections:

- Electrical safety at the beginning of this chapter.
- Electrical Specifications on page 29

3 Your custom built counter or island suite must have **proper support structure** for the countertop, the appliance and cooking vessels. The support structure will depend on the installation method, the countertop material and thickness.

4 We recommend **consulting a mechanical contractor** to advise on the structure, ventilation methods and the overall design. See sections:

- Cabinet Requirements on page 12
- Typical Applications on page 16
- Specifications on page 22

5 The equipment includes a number of **components** that have **to be installed separately**. Ensure you understand the clearance requirements and installation methods. See sections:

- Exploded View of a Typical Installation on page 11
- Specifications on page 22
- Installation Instructions on page 30

6 An exploded view of a typical installation is provided. It is very important to **seal all installation gaps** with silicone sealant to prevent water ingress. See sections:

- Exploded View of a Typical Installation on page 11
- Installation Instructions on page 30

Cabinet Requirements

Read and understand all installation safety instructions at the beginning of Section 2 Installation.

1 PLACE THE INDUCTION APPLIANCE AWAY FROM HEAT AND MOISTURE

- Similar to other electronic equipment, induction equipment is sensitive to moisture and high heat.

Recommendations

- Do not position the air intake vent near steam or heat exhaust of another appliance.
- Never place your induction equipment next to any grease generating, heat generating or steam emitting equipment, such as oven, deep fryer, pasta cooker, steamer and water bath.
- Never install or place your induction equipment near or on a hot surface.
- Isolate and protect the electronic equipment in a separate compartment. Install heat shield such as an insulated wall or air gap.

2 PROVIDE ADEQUATE VENTILATION AND MANAGE AIRFLOW

- **Maximum ambient temperature for the induction appliance to operate must not exceed 40°C [104°F].**
- Fresh air intake and hot exhaust vents must not be blocked or restricted by the installation.
- Ensure the appliance does not pull in hot ambient air or steam from another appliance.
- The intake air and exhaust air must not mix. Hot exhaust must not be pulled back into the appliance through the fresh air intake opening.
- Air intake filter, installed on the appliance or installed with an air intake duct, must be easily accessible for weekly cleaning.

Recommendations

- Install the fresh air intake kit or provide a custom built fresh air intake plenum for low profile application.
- Install louvered opening or ventilation gaps to aid air movement and to allow hot exhaust to escape.
- Depending on the air path and the amount of natural air movement, install ventilation fan on the cabinet to pull quickly hot exhaust away from the electronic equipment. As an alternative, provide a separate exhaust air plenum.

NOTE: In a situation that when ventilation fan cannot be installed on the cabinet, you must provide ventilation gaps with size of minimum 194 square centimeters [30 square inches] per single built-in appliance.

NOTE: Additional air filters, ventilation fans, cooling controls, and air ducts are the responsibility of the customer and installer.

3 PREVENT WATER INGRESS

- Any contact with water will damage the electronic equipment.

Recommendations

- Consider cleaning method and how it might impact your cabinet design.
- All mating surfaces and installation gaps between the countertop and the appliance must be bonded and sealed properly with silicone.
- Design and construct ventilation gaps in such a ways that they would prevent water ingress.

  Examples below: bent flanges are created behind louvered openings (Example 1) or ventilation gaps (Example2) to deflect water splashes.

  Example 1.

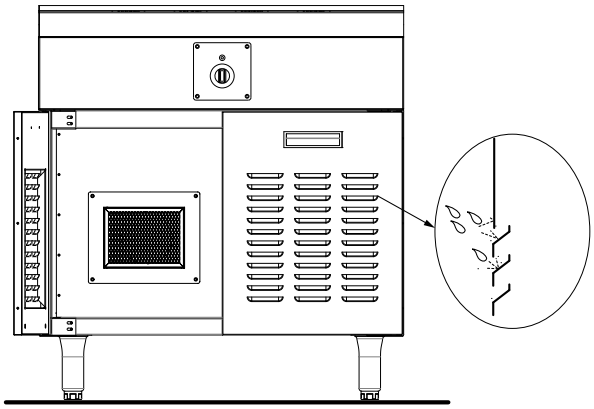

Example 2.

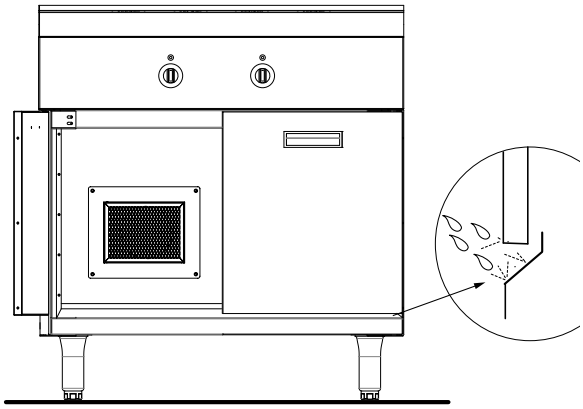

4 ELIMINATE FIRE HAZARDS

- Comply with all ventilation and installation clearances.
- Keep the appliance away from combustible materials, vapors or liquids.
- Final cabinet construction and installation must comply with all applicable national and local electrical and safety codes.

5 PROVIDE SAFE DISCONNECT FROM POWER SUPPLY

- This equipment must be positioned so that the plug is accessible unless other means for disconnection from the power supply, such as circuit breaker or disconnect switch, is provided. Consult your local authorities or your electrical contractor for details.

6 PROVIDE SERVICE CLEARANCE

- Provide enough space and service access for technicians to perform maintenance and service.

Ventilation Methods

When managing airflow around the induction equipment, you must consider many factors including:

- The number and type of the appliances and the amount of heat they would generate.
- The orientation of the exhaust vent of each appliance.
- The locations of the air vents of the cabinet.
- The installation and ventilation clearances for the equipment.
- The overall kitchen environment such as the locations of other heat or moisture generating equipment (fryers, ovens, pasta cookers).

As each installed location would have unique individual requirements, this section can only provide you with some typical designs for your consideration.

NOTE: Multiple ventilation methods are shown together in one single cabinet as an example only.

NOTE: SH/IN models are shown as an example.

❶ Fresh air intake opening is placed where it will not be blocked and the air filter is accessible for weekly cleaning. In this example, it is installed behind a cabinet door with louvered openings.

❷ Ventilation gaps are created around the cabinet doors to aid air movement.

❸ The fresh intake air is isolated and directed to the appliance through an air duct.

❹ Ventilation vents are installed at the front of the cabinet to aid air movement.

❺ Typically, exhaust vents are installed on the back of the cabinet.

❻ Using flue riser is another effective method to vent the hot exhaust.

❼ When multiple appliances are installed, consider using ventilation fans to quickly expel the exhaust. Ventilation fan shown, not provided, part number = 4516836.

NOTE: Additional air filters, ventilation fans, cooling controls, and air ducts are the responsibility of the customer and installer.

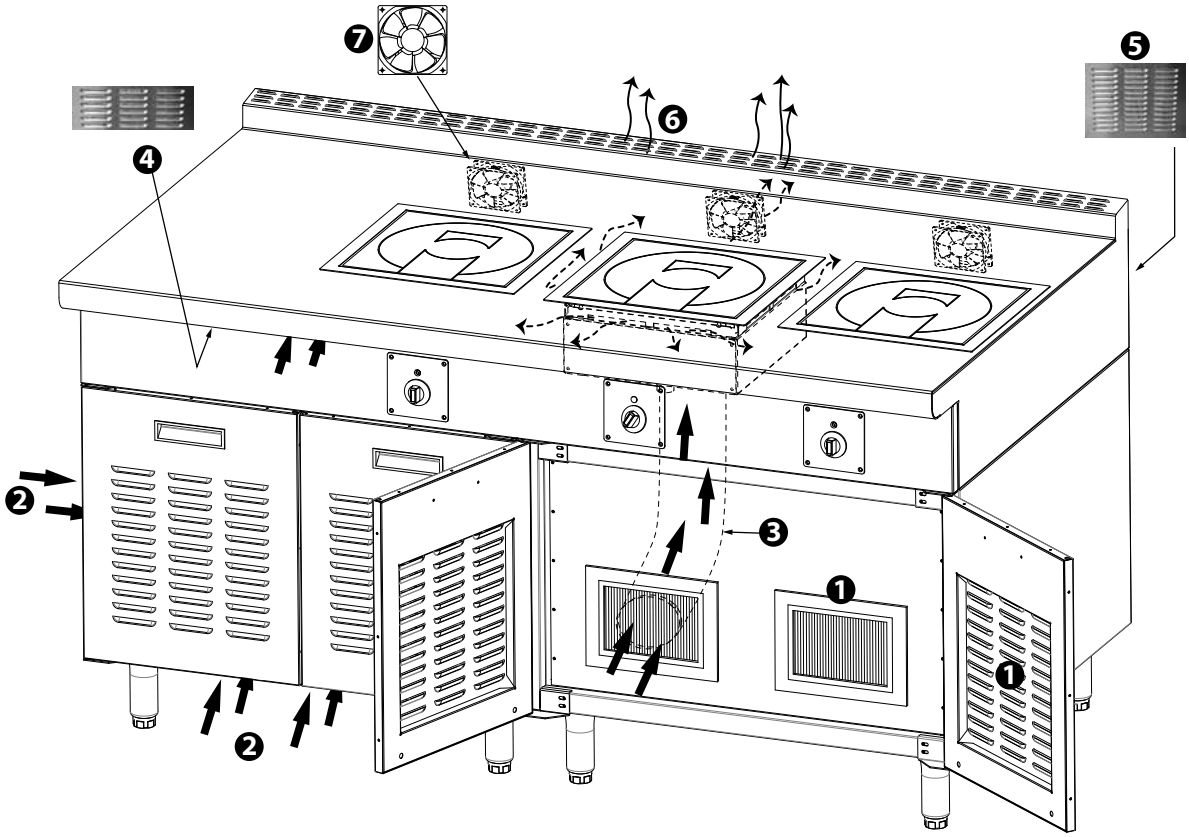

Examples of Ventilation at Front of Cabinet

Fresh air intake into the cabinet is important to keep the ambient temperature low and to push hot exhaust out of the cabinet.

1. The simplest method is to install louvered openings beneath the counter surface.
2. Instead of louvered openings, consider creating a long air gap.
3. If the cabinet has a plate rail, consider creating air gaps on the underside of the rail.
4. Another common method is to create gaps around cabinet doors.

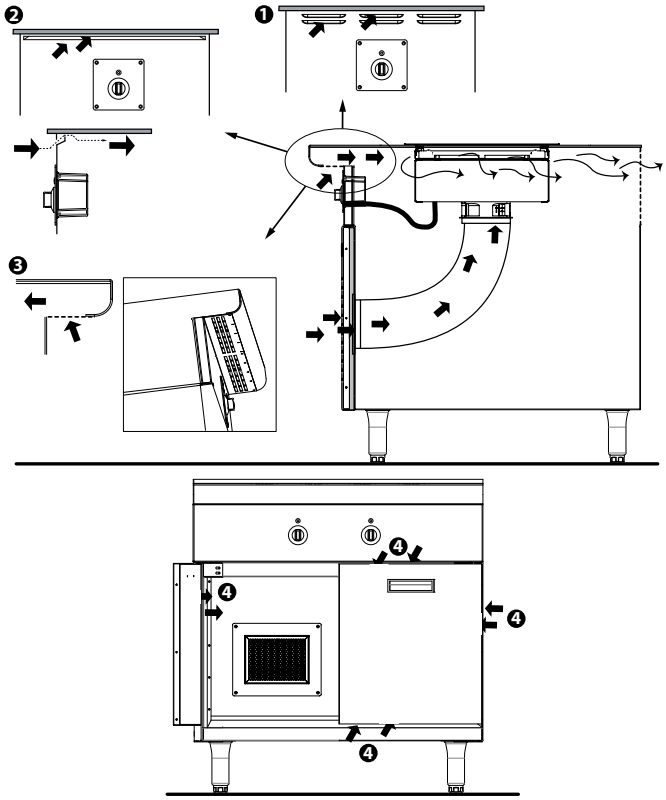

Examples of Ventilation at Back of Cabinet

Adequate exhaust openings must be provided to allow hot air to escape. Typically, exhaust vents are installed on the back, at the top of cabinet.

1. The simplest method is to install louvered openings.
2. When multiple appliances are installed, it is recommended to use additional ventilation fan or fans to expel quickly the exhaust.
3. Depending on the clearance behind the cabinet, a flue riser might be necessary to provide a path for the exhaust to dissipate.
4. A combination of flue riser and ventilation fans are often used in an island suite when multiple heat generating appliances are installed.

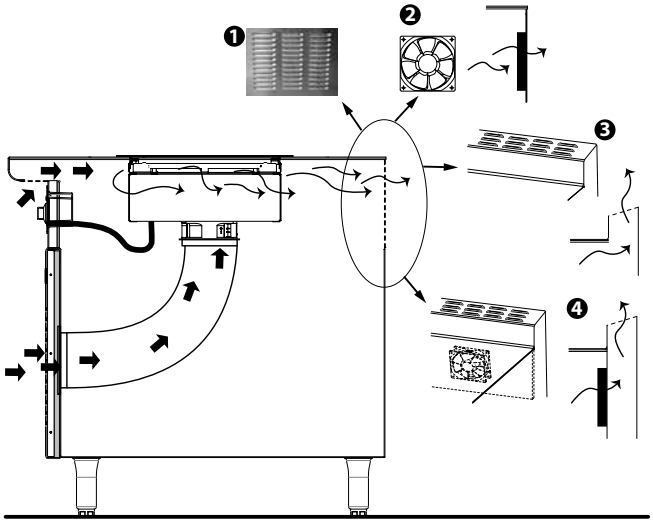

Typical Applications

In this section you will find examples of the most common installations for the induction appliance.

Use the list of features below as your design guideline to ensure a proper cabinet is used for the application and installation.

IMPORTANT DESIGN FEATURES

Note the following key design features in each application example :

Adequate ventilation:

(See details in Ventilation Methods on page 14)

❶ Fresh air intake vent and air filter

❷ Fresh air intake duct

❸ Louvered opening or ventilation gap

❹ Louvered openings or ventilation fan(s)

Safe electrical environment:

❺ An enclosed compartment protects the electronic appliance and wiring from the environment.

Personnel are also protected from the electronics and the electrical cables.

❻ The main power cable is routed separately from control unit cable.

❼ The main power supply plug of the appliance, or the circuit breaker box for multiple appliance, is accessible for disconnect.

❽ Supply inlet / conduit opening shown.

Water-tight environment:

❾ Mating surfaces between the appliance and coutertop are sealed with silicone (not shown, see).

❿ Design and construct ventilation gaps that could prevent water ingress (not shown, see).

Grease Drawer:

⓫ Provide a suitable grease drawer. See Grease Drawer and Grease Chute Extension on page 21. Grease drawer shown, part number 4529777.

APPLICATION EXAMPLE 1

- Multiple appliances of the same or different types are built into the same counter or island suite.
- In this application, it is very important that all ventilation and electrical requirements are met.
- See Important Design Features on page 16 for the descriptions of items ❶ to ⓫ in illustration.

VENTILATION

- Heat from the exhaust builds up quickly. Built up of hot exhaust will cause the electronic equipment to overheat, to reduce power, or to shutdown.
- Recommendations:
  - Install ventilation fan or fans to quickly remove hot exhaust from the cabinet. (Illustration, item 4)
  - Verify in the final installation that the ambient temperature for the induction components during operation is below 40°C or 104°F.

ELECTRICAL:

- NOTE: National and local electrical codes dictate the electrical requirements for this type of application. For example, some jurisdictions allow only a single power supply connection from an installation and some allow for a maximum of two power supply connections. Consult your local authority or electrical contractor for details.
- Illustration: Each appliance is plugged into a receptacle and each receptacle is connected to a circuit breaker (item 7). The circuit breakers are connected to a single power supply. The breaker box is accessible for disconnection from the power supply.

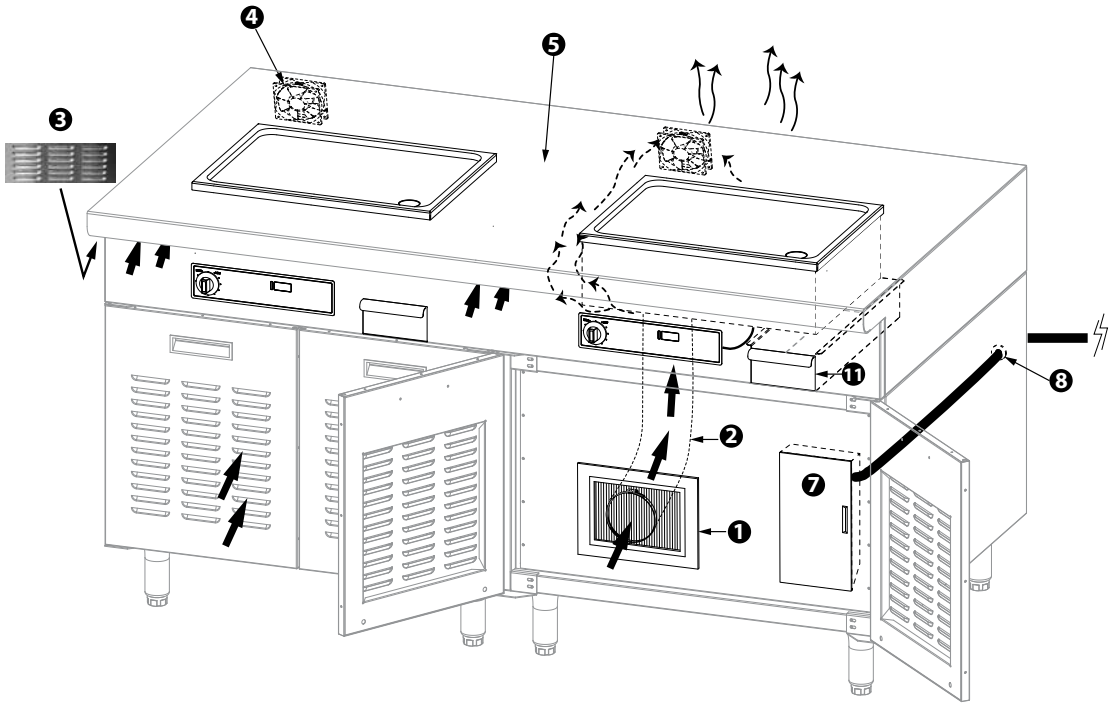

Application Example 1: Multiple Appliances and Ventilation.

Indicates the direction of airflow for fresh air. Indicates the direction of airflow for exhaust air.

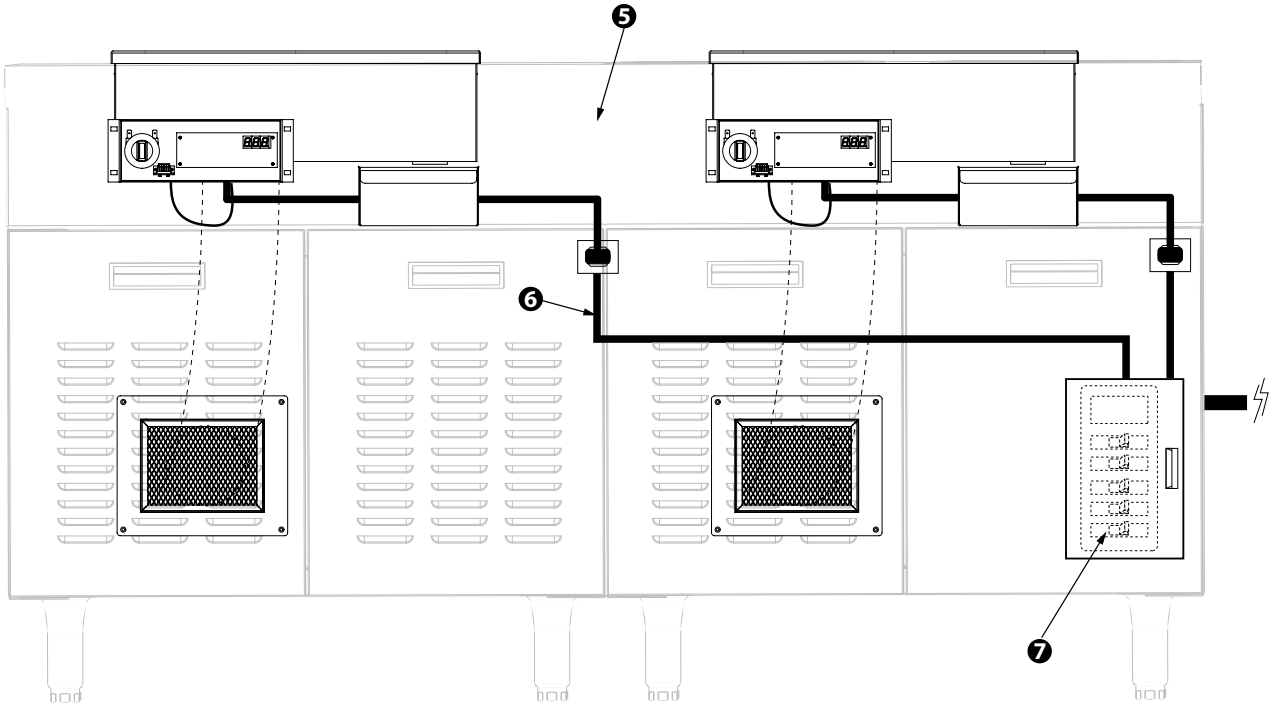

Application Example 1: Multiple Appliances and Electrical Installation.

APPLICATION EXAMPLE 2

- The equipment is built into a large, enclosed compartment. There is ample of space to install the appliance, the air intake kit and to service the equipment.
- See Important Design Features on page 16 for the descriptions of items ❶ to ⓫ in illustration.

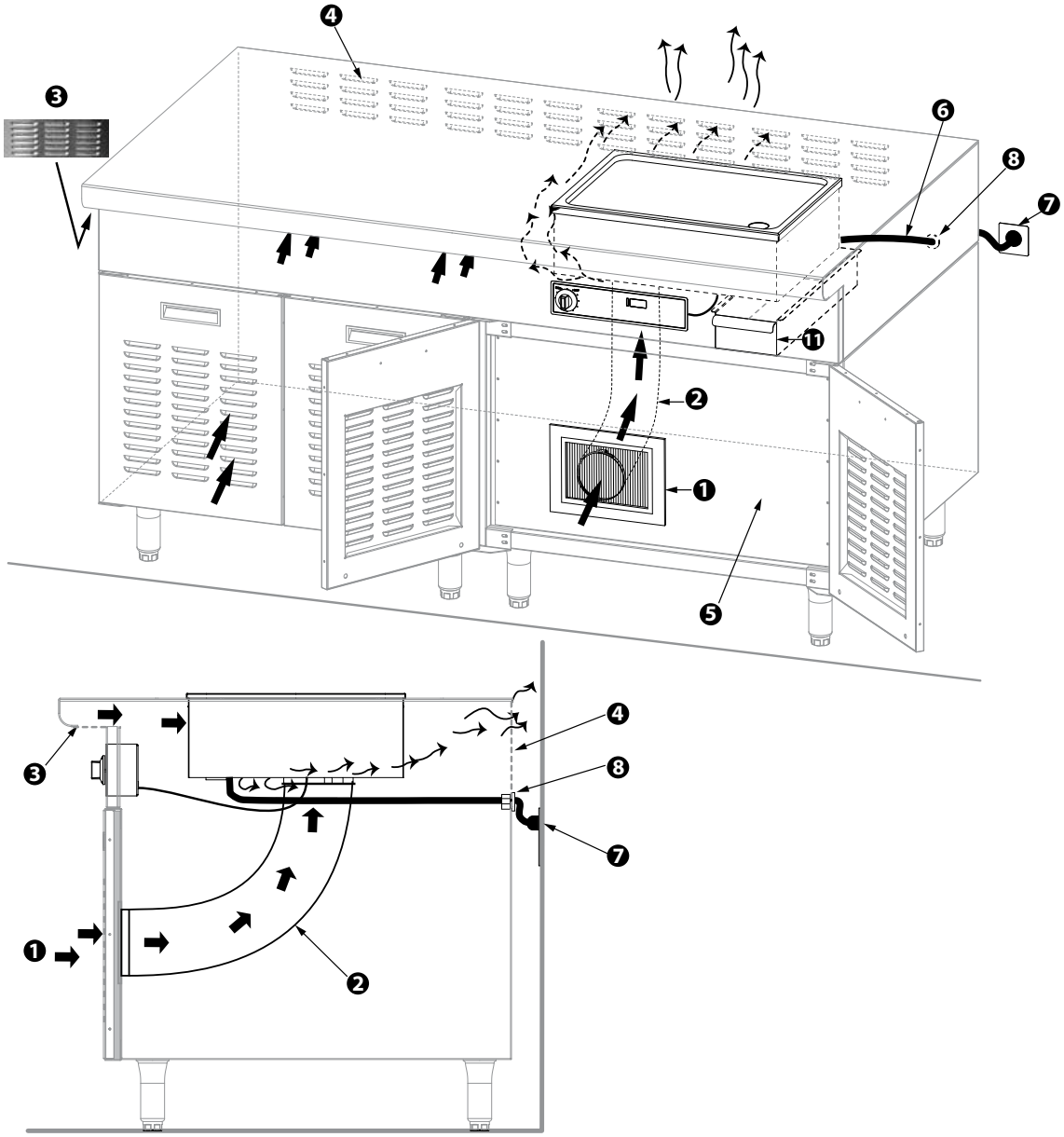

Application Example 2: Equipment Built Into A Large Compartment.

Indicates the direction of airflow for fresh air. Indicates the direction of airflow for exhaust air.

APPLICATION EXAMPLE 3

- The equipment is built into a small, enclosed compartment of a counter with an open base. The compact profile of the appliance is ideal for a front of house cooking station.
- This application requires a custom made, short fresh air intake path (below, item 2, not provided). The fresh air intake vent can be installed on the base of the compartment.
- The intake air must always be filtered.
- Illustration, item 14: Metal air intake filter holder is provided in the air intake kit (Kit part number=95000021).
- Illustration, item 12: Air intake filter is provided in the air intake kit (Kit part number=95000021).
- Illustration, item 13: Plastic holder shown for the air filter is not provided (part number=72261030). This holder can be mounted directly onto the bottom of the cabinet.
- See Important Design Features on page 16 for the descriptions of items ❶ to ⓫ in illustration.

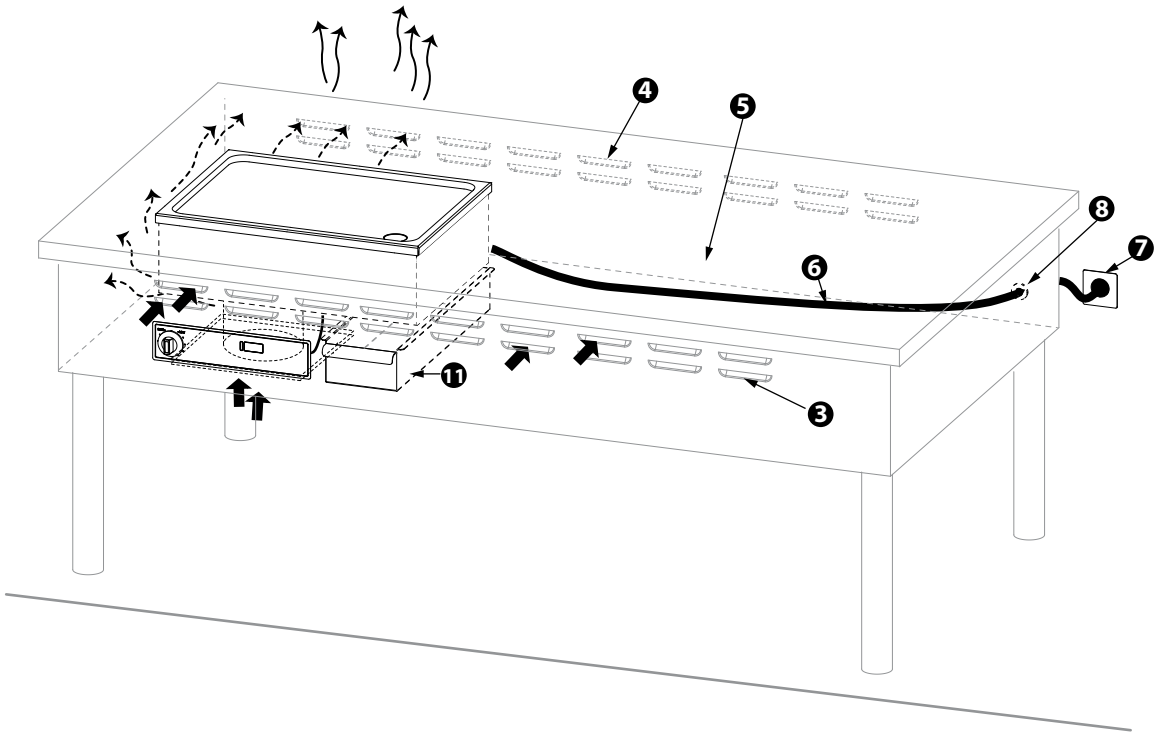

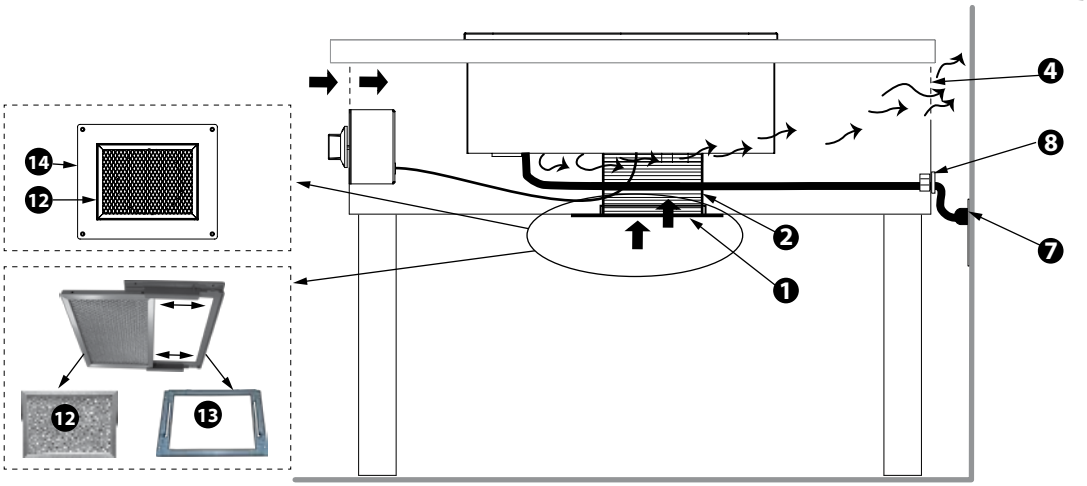

Application Example 3: Equipment Built Into A Counter With An Open Base.
➡ Indicates the direction of airflow for fresh air. ⤳ Indicates the direction of airflow for exhaust air.

APPLICATION EXAMPLE 4

- This is an application of a low profile design, combined with additional functionalities such as cold or dry storage base. The induction equipment and wiring are isolated and protected in the upper compartment.
- Fresh air is delivered through a custom designed air plenum (below, item 2, not provided). A custom air filtered is used (below, item 1, not provided).
- See Important Design Features on page 16 for the descriptions of items ❶ to ❽ in illustration.

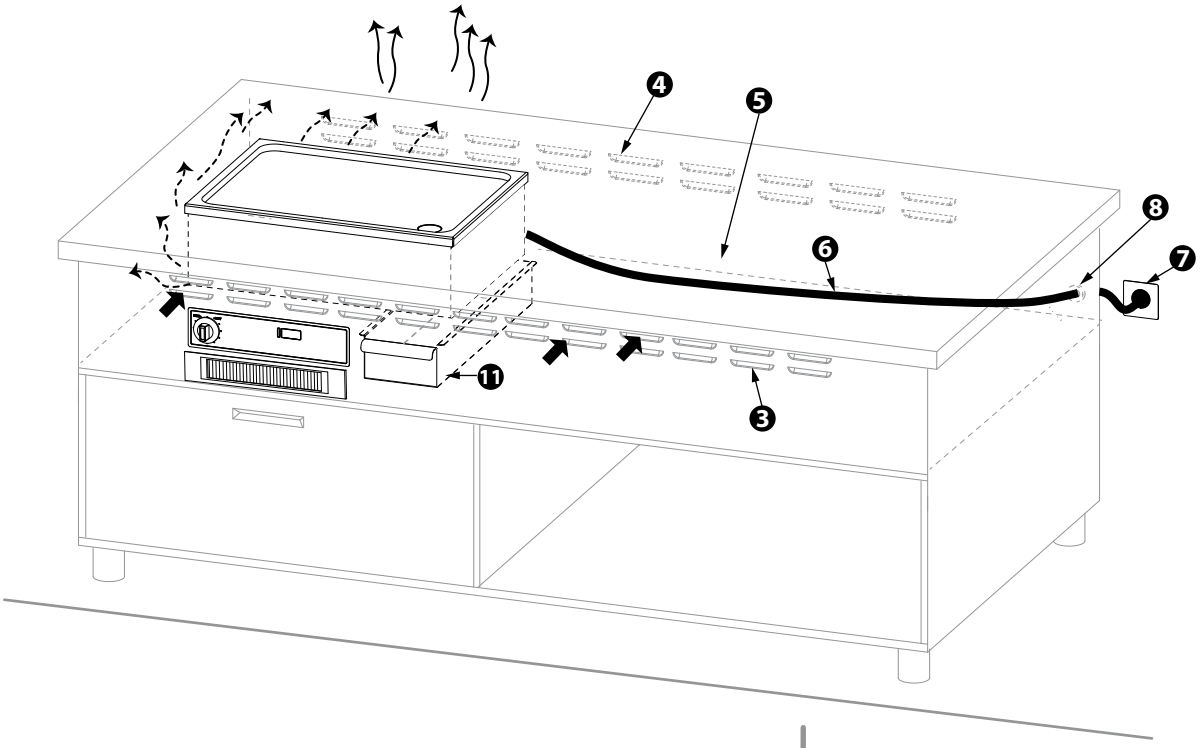

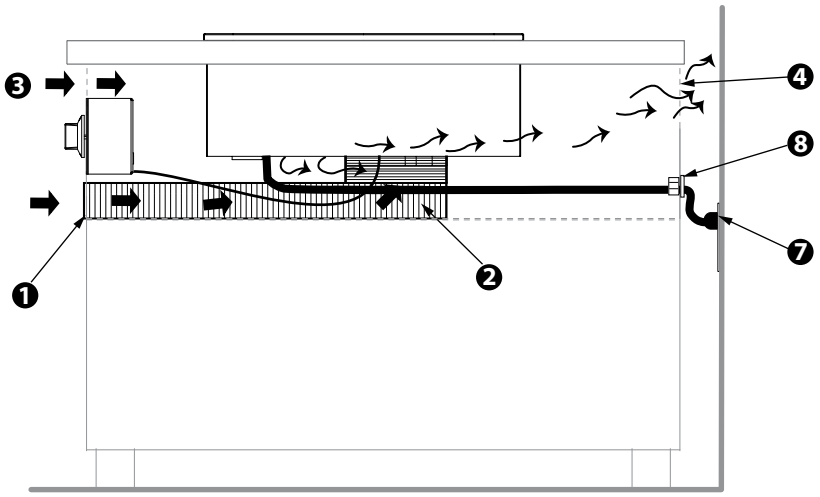

Application Example 4: Equipment Built Into A Counter With Other Built-In Functionalities.
➡ Indicates the direction of airflow for fresh air. ⤳ Indicates the direction of airflow for exhaust air.

Grease Drawer and Grease Chute Extension

⚠Caution

A suitable grease-collecting means must be in place before operating appliance.

Customers are responsible for providing suitable grease-collecting means for the equipment.

Notice

The design, the material used, and the method of construction for the grease-collecting means must follow strictly any applicable national and local food safety requirements.

GREASE DRAWER DESIGN CRITERIA

- Recommended capacity, minimum 1 US gallon or 3.785 liters.
- Protect the electrical connections and wiring from the hot liquid and hot fume in the grease drawer.
- Ensure hot fume from the grease drawer does not get pulled back into the induction appliance through the air intake opening.
- Example, see Dimensions: Grease drawer Part Number 4529777 (Not Provided) on page 25

Examples

	A removable grease drawer is placed on a rack. A grease chute extension is shown.
	A removable grease drawer is located at the front. In this example, the grease chute extension and the grease drawer housing are integrated as one piece. This prevents hot greasy fumes from entering into the appliance.
	A removable grease drawer is located at the front. In this example, the grease drawer and its housing can be maintained easily.

GREASE CHUTE EXTENSION DESIGN CRITERIA

- Recommended length for grease chute extension, minimum 50 mm or 2 inches.
- Use stainless steel 304 (18-8) or 316 to construct the extension.

Shown below are examples of different chute extension designs. A braising pan is shown as an example. Same concepts can be applied to a single or dual griddle pan. Use the dimensional drawings provided in this manual for the exact grease chute location and dimension.

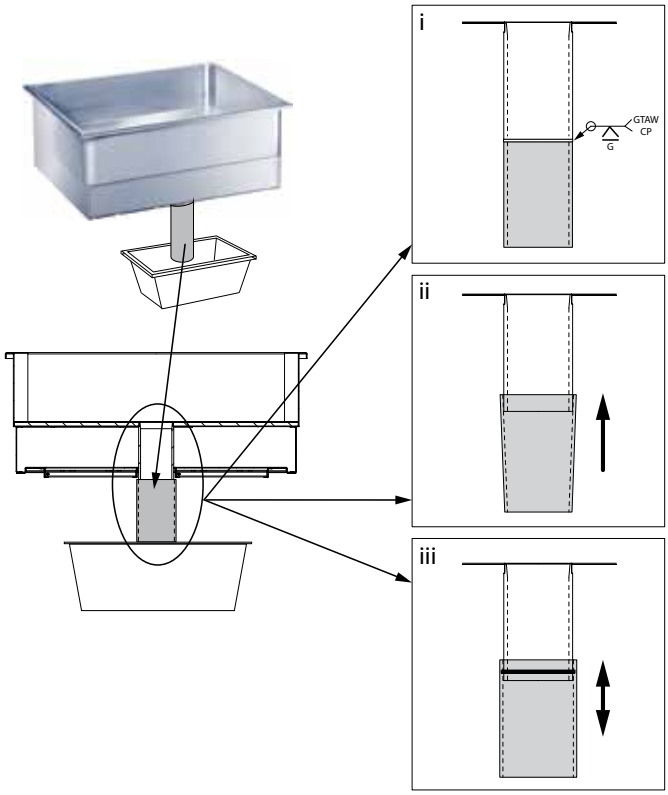

i	A pipe extension is welded to the grease spout. Illustration shows, as an example, the symbols: groove, flush and all-around weld symbols on a butt joints.
ii	A removable pipe extension is friction fitted to the grease spout.
iii	A removable pipe extension with an O-ring seal is friction fitted to the grease spout by friction.

Specifications

DIMENSION TABLE

Model	Dimensions (width x depth x height)		Griddle Plate (width x depth)	
	mm	inch	mm	inch
SH/GR/IN 3500 / SH/GR/IN 5000	531 x 390 x 159	20.91 x 15.35 x 6.26	493 x 352	19.41 x 13.86
Control Unit SH/GR/IN	267 x 90 x 55	10.51 x 3.54 x 2.17	--	--

DIMENSIONS: SH/GR/IN

Measurements in mm and [inch].

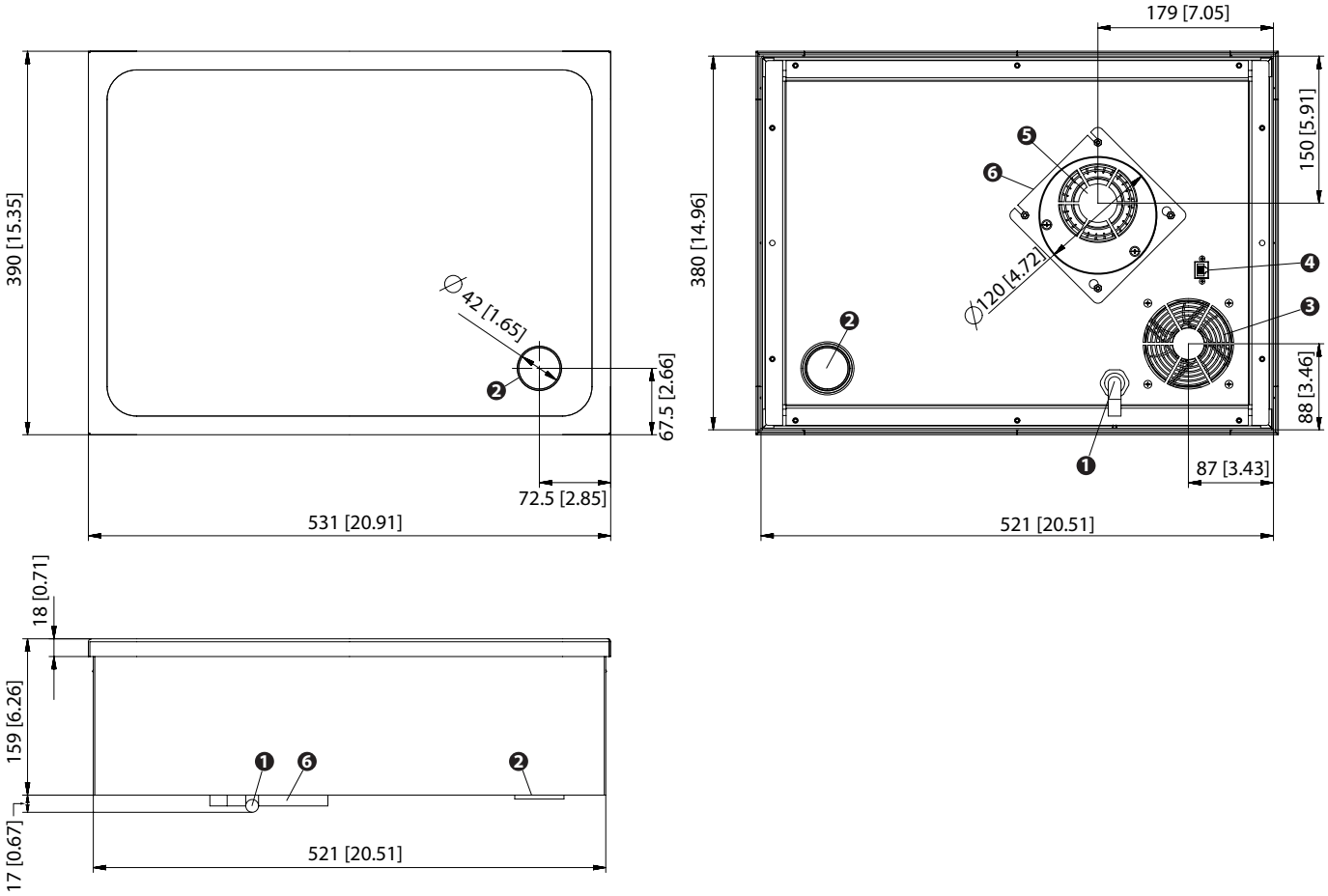

1	Mains power cable
2	Grease chute
3	Air exhaust
4	CAN/BUS connection
5	Air intake
6	Air duct flange (Air Intake Kit)

DIMENSIONS: MOUNTING FRAME 95000068

A mounting frame is included for flush installation on a countertop with thickness 2mm to 7mm [0.08" - 0.28"].

The frame comes with a leveling plate and a silicone tube. This frame is to be mounted onto the underside of the counter surface.

Measurements in mm and [inch].

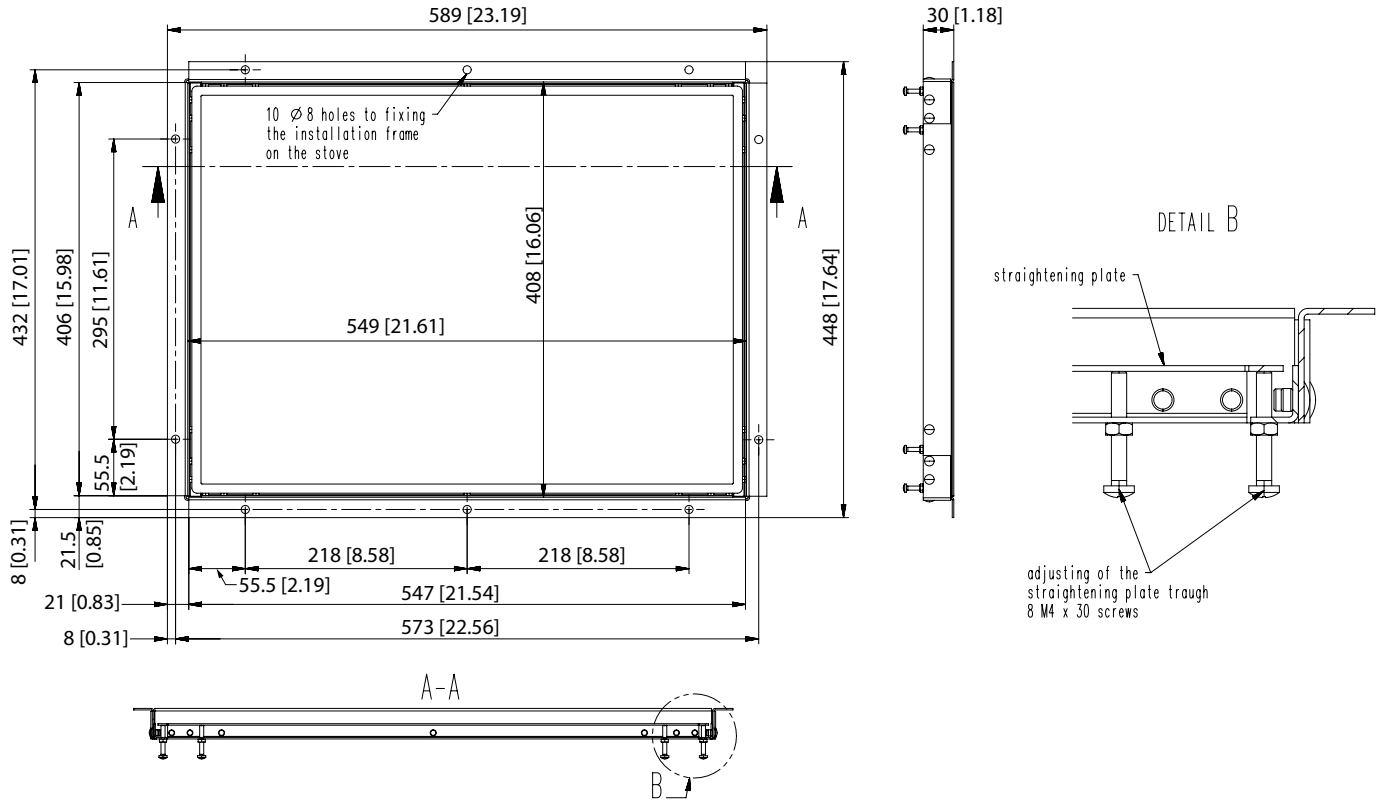

DIMENSIONS: CONTROL UNIT

Measurements in mm and [inch].

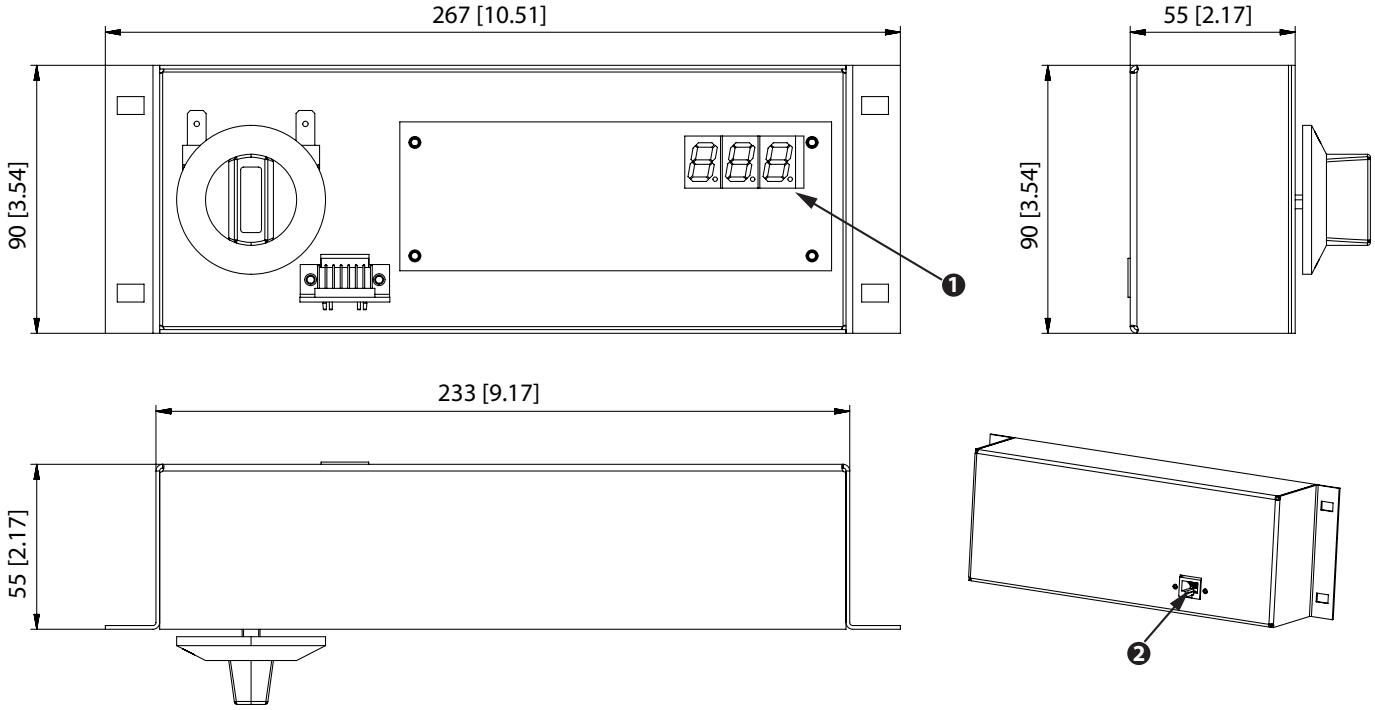

1	Digital display
2	CAN/BUS connection

DIMENSIONS: GREASE DRAWER PART NUMBER 4529777 (NOT PROVIDED)

The dimensions of grease drawer 4529777 are provided for your reference. Consider to use these dimensions to build your own or to design a housing for the drawer.

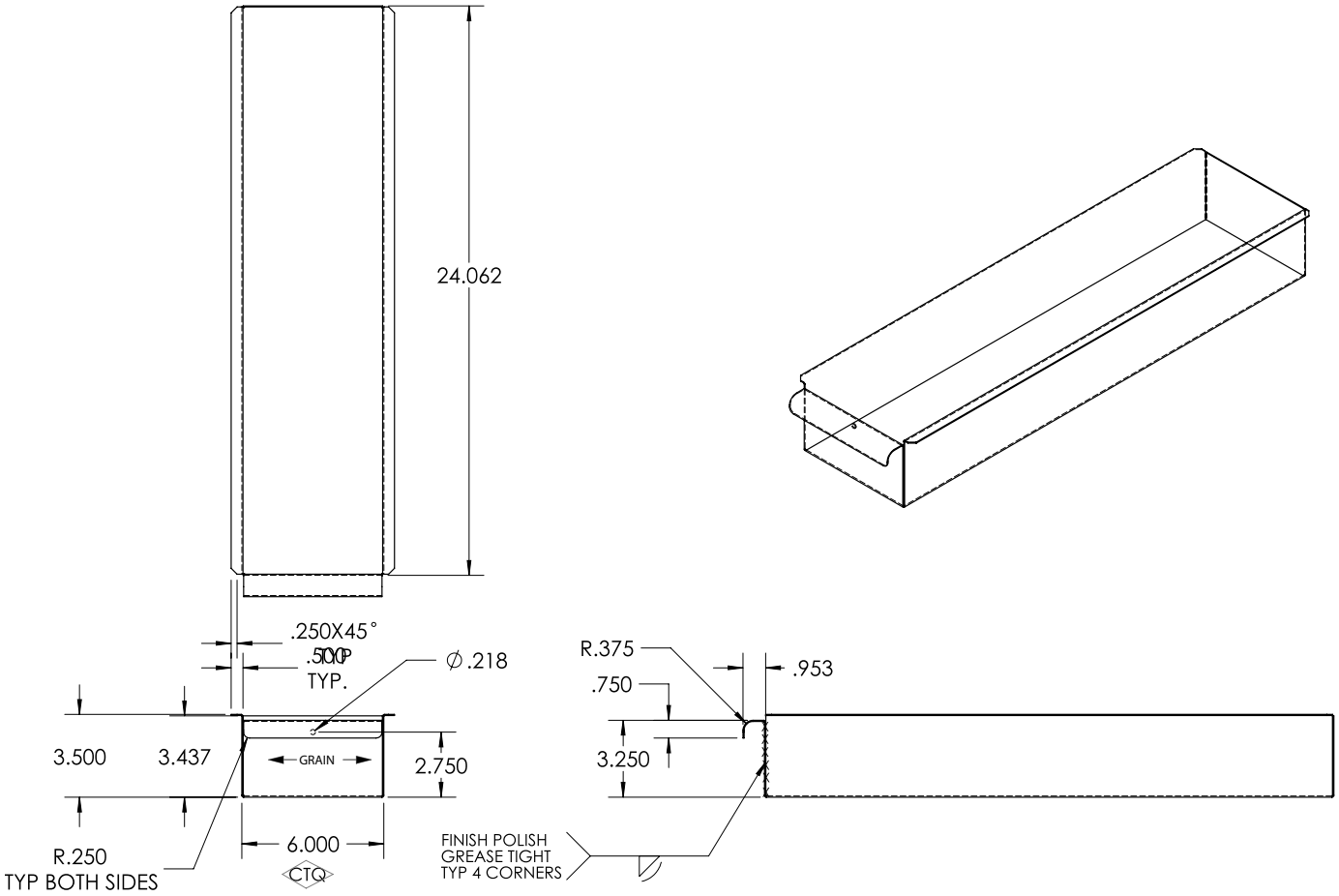

NOTE:

- DEBURR ALL SHARP EDGES

4529777	GREASE DRAWER GRID	18	430SS	#4	31.993 X 13.689
PART NUMBER	DESCRIPTION	GAUGE	MATERIAL	FINISH	SHEAR SIZE

CUT-OUT DIMENSIONS: COUNTERTOP FOR SH/GR/IN

Installation Method	Illustration	Countertop Opening Dimensions
Top-Mount (see Note below)	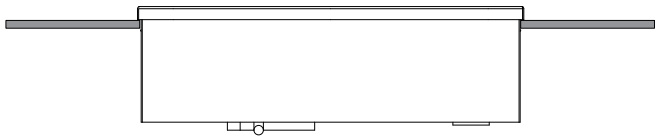	523mm x 382mm [20.59" x 15.04"]
Flush-Mount	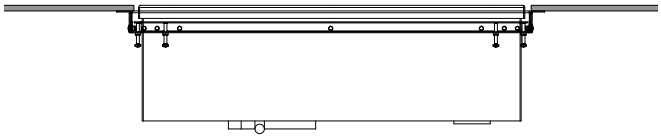	546mm x 405mm [21.5" x 15.94"]

NOTE: **Recommended for Top-Mount Installation**:

Custom built an installation frame or create a flange on the counter surface. This flange protects the equipment against any water ingression.

Maximum thickness of flange must not exceed 3.5 mm [0.14"]. Maximum height of flange must not exceed 16.5mm [0.65"].

Illustration, left:

Measurements in mm and [inch].

i Countertop with flange

ii Griddle

iii Examples of flange construction. Create a flange by bending the countertop (left) or installing a bracket (right).

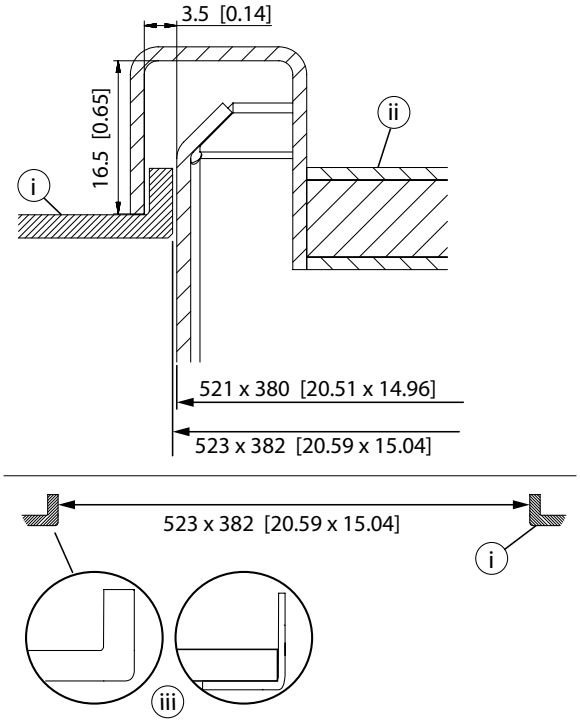

CUT-OUT DIMENSIONS: HOLES AND STUDS FOR CONTROL UNIT

Measurements in mm and [inch].

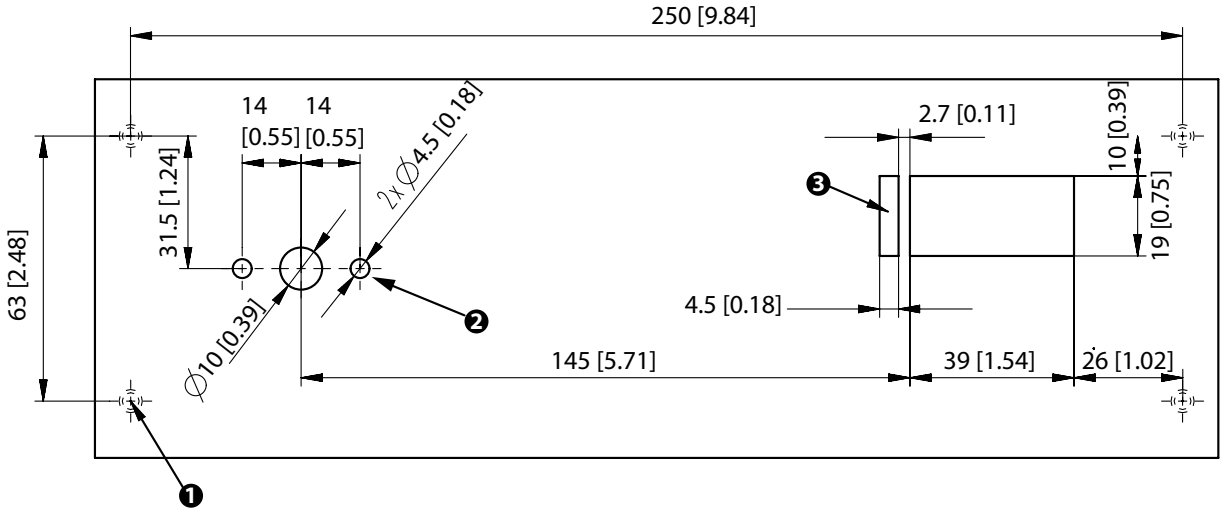

1	Location for four (4) welding bolts
2	Holes for mounting the control switch
3	Opening for the service interface

CUT-OUT DIMENSIONS: AIR INTAKE KIT AIR FILTER HOLDER

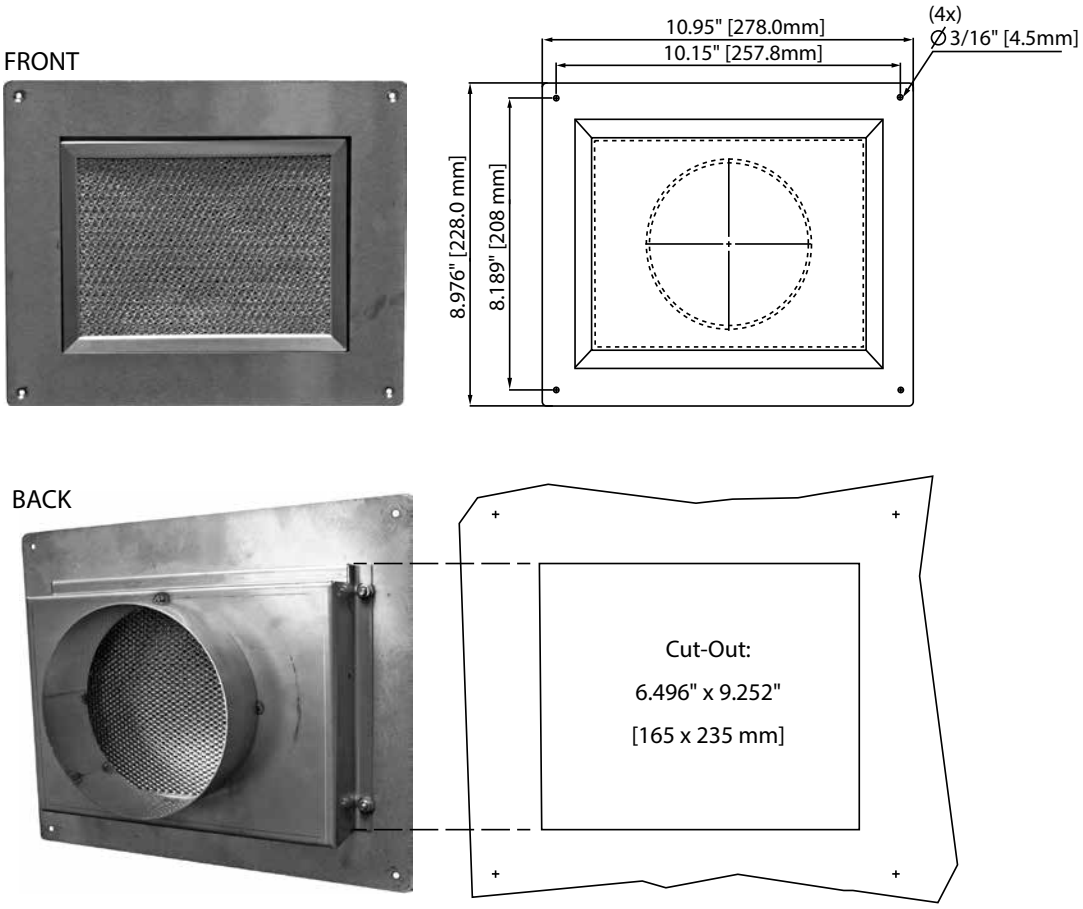

INSTALLATION CLEARANCE

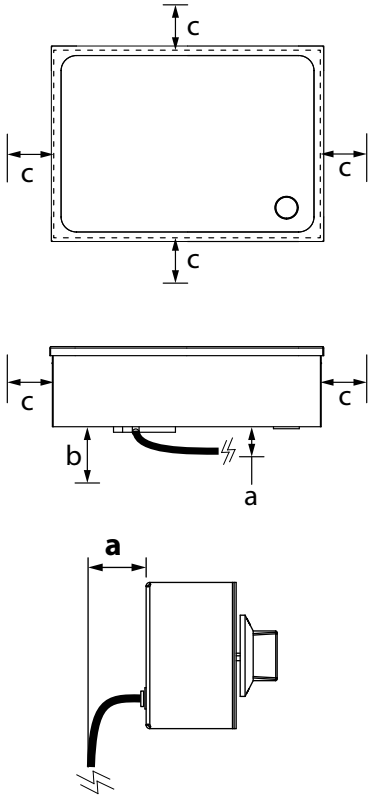

Dimension a — minimum clearance, cable bend/ connection	**Dimension b** — minimum clearance, air exhaust	**Dimension c** — minimum body clearance, all sides
64mm [2.5″]	40mm [1.57″]	40mm [1.57″]
63.5mm [2.5″]	--	--

PARALLEL INSTALLATION AND CLEARANCE

When installing multiple appliances on the same counter, a minimum gap between two appliances must be maintained. This gap prevents electrical interference and ensures proper air ventilation between the appliances.

Notice

The orientation of each appliance in a parallel configuration will affect the ventilation requirements. Ensure the final installation meets all operating and ventilation requirements.

Two configurations shown (left): side to side (top) and back to back (bottom).

Model	Dimension **y** — minimum clearance, from edge to edge
SH/GR/IN	69 mm [2.72″]

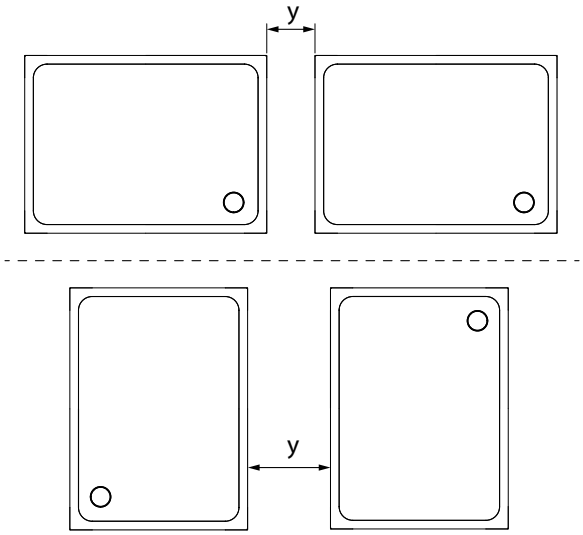

ELECTRICAL SPECIFICATIONS

Model	Power	Voltage* (50/60 Hz)	Plug
SH/GR/IN 3500	3500W 16A	208V 1Φ	NEMA 6-20P
	3500W 15A	230V 1Φ	EU1-16P
SH/GR/IN 5000	5000W 14A	208V 3Φ	NEMA L15-20P
	5000W 8A	400V 3Φ	EU 5-Pole

* 1Φ = 1 Phase; 3Φ = 3 Phase

ELECTRICAL CABLES

- Power supply cable and plug, 1.8-meter [6-foot] long.
- Control unit cable, 1-meter [3-foot] long.

OPERATING CONDITIONS

For the appliance to function properly, the following conditions must be maintained.

Maximum Tolerance of Nominal Supply Voltage	+6 /-10 %
Supply frequency	50/60 Hz
Ingress Protection class	IP X0 (Protection by customer is required.)
Maximum Ambient Temperature	In Storage, -20°C to +70°C [-4°F to +158°F]
	In Operation, +5°C to +40°C [+41°F to +104°F]
Maximum Relative Air Humidity	In Storage, 10% to 90%
	In Operation, 30% to 90%
Maximum Fan Air Flow	150m^3 per hour [88.29 cfm] Minimum opening for fresh air supply required: total sum of 10700mm^2 [16.59 square inches]
Exhaust Opening	Minimum 194 square centimeters [30 square inches] per single built-in unit.

WEIGHTS

Model	Net Weight	
	kg	lb
SH/GR/IN 3500	24	52.9
SH/GR/IN 5000	26	57.3

Installation Instructions

INSTALLING THE GRIDDLE ASSEMBLY

Notice

To protect the induction equipment from water penetration, you must apply and bond the silicone adhesive properly to create a water-tight seal.

Before you begin the installation, it is very important to use isopropyl alcohol (minimum 70%) or equivalent to clean any surface areas where the silicone adhesive will be applied.

NOTE: Brackets and fasteners for installation are not provided.

Instructions for Top-Mount Installation

(See Cut-out dimensions: Countertop for SH/GR/IN on page 26)

1. When Air Intake Kit is used, fasten the air duct flange onto the bottom as show. Fasteners (4 screws and 4 nuts) are provided in the kit.

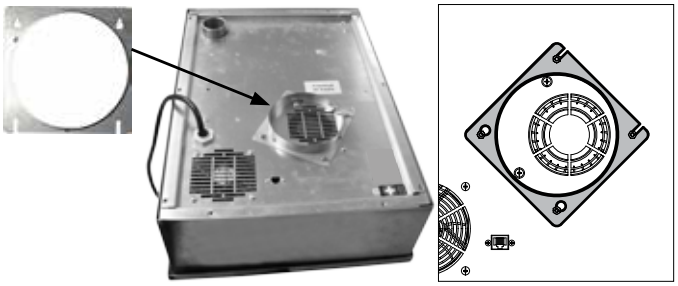

2. Apply silicone adhesive PACTAN (part number 70000015, provided in the Air Intake Kit) to the lower end of the griddle plate rim and the counter surface where the two surfaces will meet.

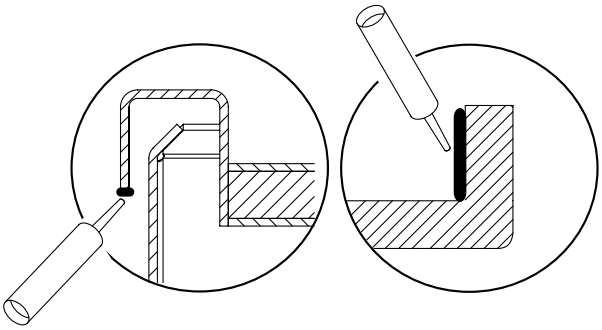

3. Then carefully lower the appliance into the opening.

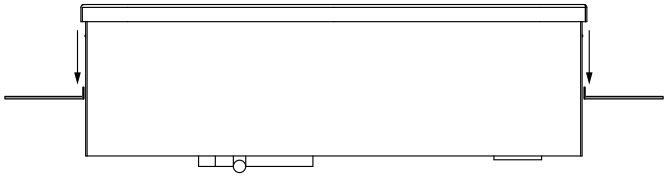

4. To seal the gap between the rim and the counter surface, apply a thin line of silicone completely around the edge of the griddle plate.

   NOTE: We recommend using a food grade silicone for this application.

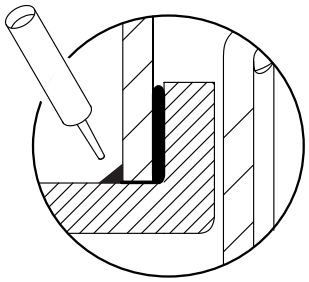

NOTE: Provide enough time for the silicone to cure per manufacturer's instructions. Do not start up the appliance during this time.

Instructions for Flush-Mount Installation

NOTE: Provide enough time for the silicone to cure per manufacturer's instructions. Do not start up the appliance during this time.

(See Cut-out dimensions: Countertop for SH/GR/IN on page 26)

1. When Air Intake Kit is used, fasten the air duct flange onto the bottom as show. Fasteners (4 screws and 4 nuts) are provided in the kit.

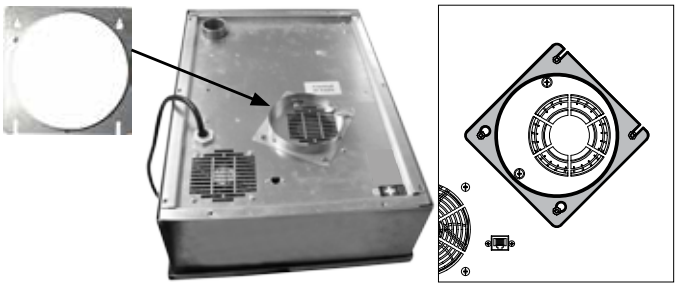

2. There are ten (10) pre-drilled holes on the rim of the mounting frame. The frame is to be stud-mounted to the underside of the counter surface (i).

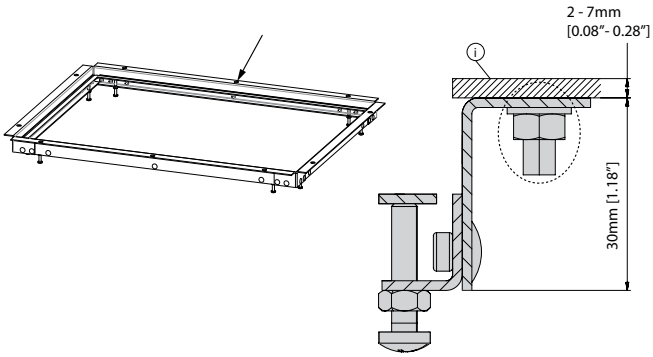

3. Lower the griddle onto the mounting frame. The rim of the griddle plate should sit on the leveling plate of the mounting frame.

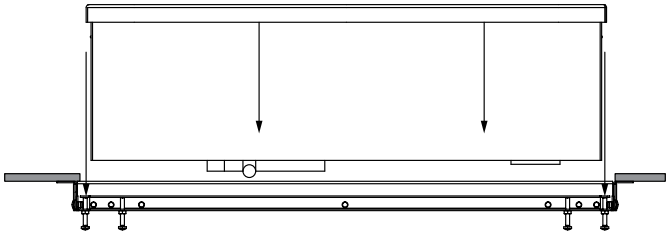

4. Level and adjust the griddle by adjusting the machine screws (ii) under the leveling plate (i).

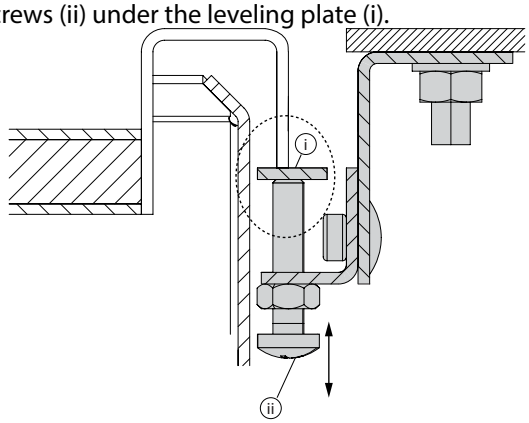

5. Insert into the gap between the griddle plate and the frame the Ø11mm heat resistant silicone gasket (provided).

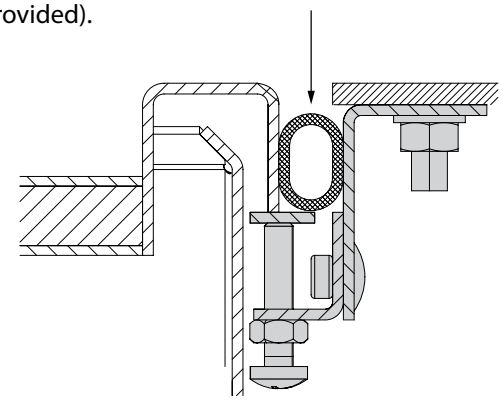

6. Apply silicone adhesive PACTAN (part number 70000015, provided in the Air Intake Kit) completely around to seal the gap between the griddle plate and the counter surface.

   NOTE: We recommend using a food grade silicone for this application.

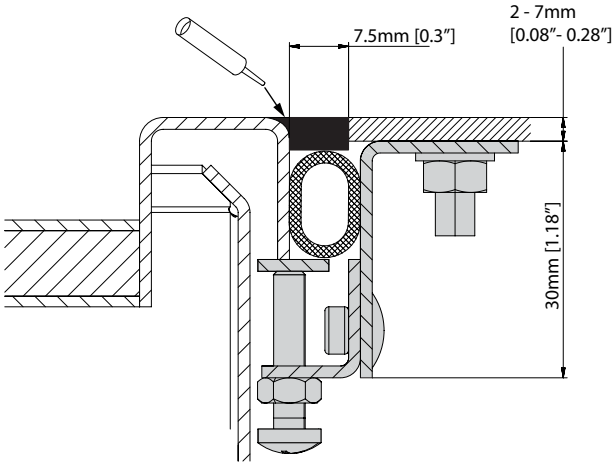

INSTALLING THE CONTROL UNIT

The unit is be mounted onto the back of a panel.

NOTE: Install the unit in an UPRIGHT position.

NOTE: The unit must be mounted onto a non-combustible surface.

NOTE: **Do not dis-assemble the unit. Do not remove or loosen any screws on the control unit.**

NOTE: Fasteners for installation are not provided.

1. Use the dimensions provided in Cut-out dimensions: Holes and Studs for Control Unit on page 27, install studs and create cut-outs on the panel.
2. The plastic knob is pressure fitted to the switch. Remove knob. Then fasten the unit to the back of the panel. Use the four holes on the housing to mount the control unit to the back of the panel.

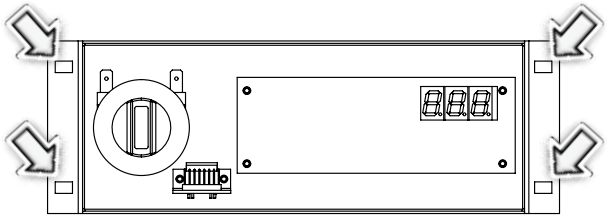

3. Use two (2) M4 screws to secure the switch to the panel. This prevents the switch from rotating. Failure to perform this installation step will cause the switch to dislodge from the assembly.

4. Apply overlay (provided) to the front of the panel and install knob.

   Overall dimensions of the overlay: approximately 338x72mm [13.31”x 2.83”].

INSTALLING THE AIR INTAKE KIT (P/N 95000021)

> **Notice**
>
> The maximum length of the air duct must not exceed 244cm [96”].
>
> The Air Intake Filter should be in visible view, easily accessible, and labeled. Operators have to inspect and clean the air filter(s) regularly. A blocked filter can cause electronic damage to the induction unit.

Components (SH/IN model shown as an example)

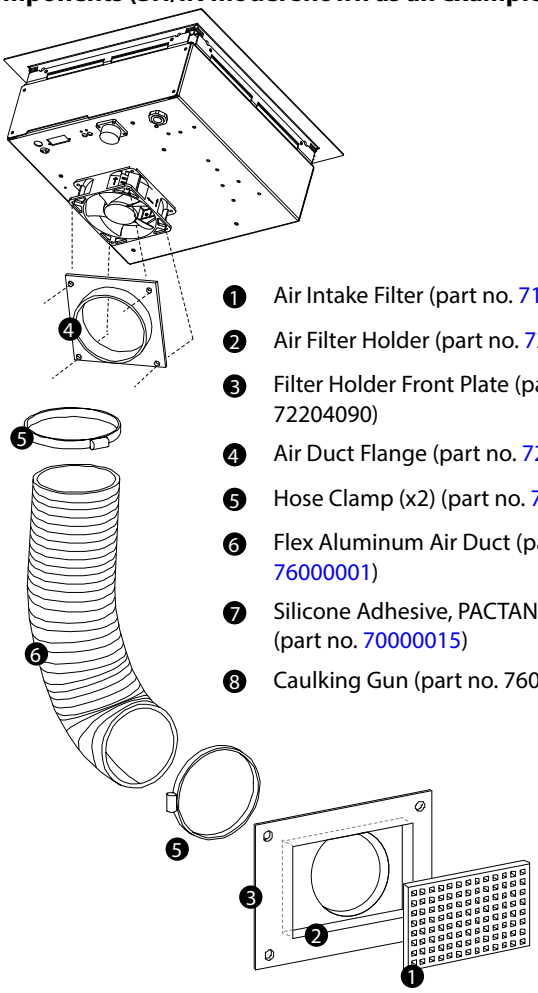

1. Air Intake Filter (part no. 71000003)
2. Air Filter Holder (part no. 72183091)
3. Filter Holder Front Plate (part no. 72204090)
4. Air Duct Flange (part no. 72263020)
5. Hose Clamp (x2) (part no. 76000002)
6. Flex Aluminum Air Duct (part no. 76000001)
7. Silicone Adhesive, PACTAN 7076 (part no. 70000015)
8. Caulking Gun (part no. 76000003)

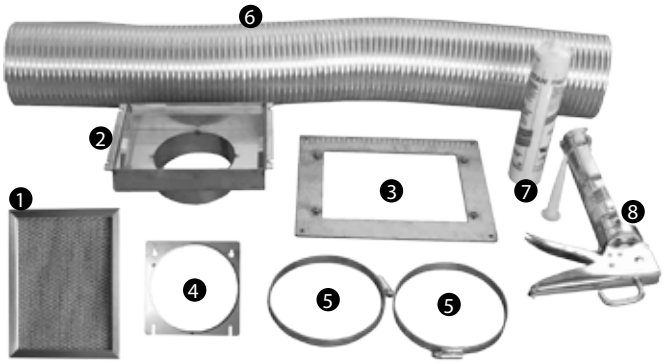

To install the air intake kit:

1. Fasten the air duct flange onto the bottom as show. Fasteners (4 screws and 4 nuts) are provided in the kit.

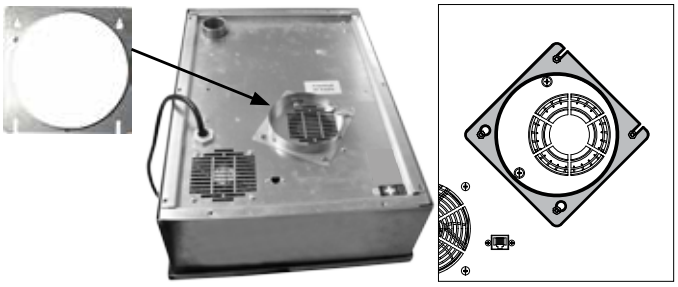

2. Mount the air filter holder with front plate onto the cabinet. For cut-out dimensions, see section Cut-Out Dimensions: Air Intake Kit Air Filter Holder on page 27

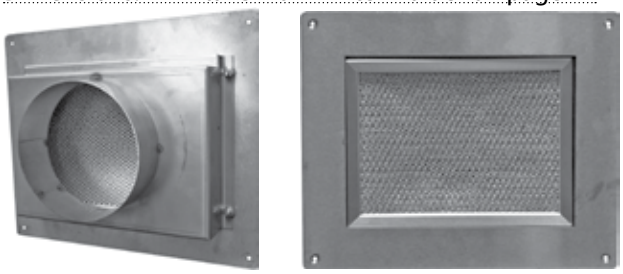

3. Use the hose clamps to attach the air duct to the filter holder (Step 2) and the air duct flange (Step 1).
4. Insert the air intake filter and label the location of the filter for the kitchen staff. Frequent inspection and cleaning of the filter is required.

CONNECTING THE COMPONENTS

1.

> **⚠Warning**
>
> Ensure the control knobs are in the 0 (OFF) position BEFORE connecting the appliance to the electrical supply.

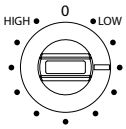

ON-Position
Any position where the White Line is not pointing at **0**.

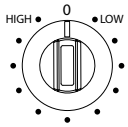

OFF-Position
The White Line is pointing at **0**.

2. Remove all objects from the griddle plate.
3. To connect the components:

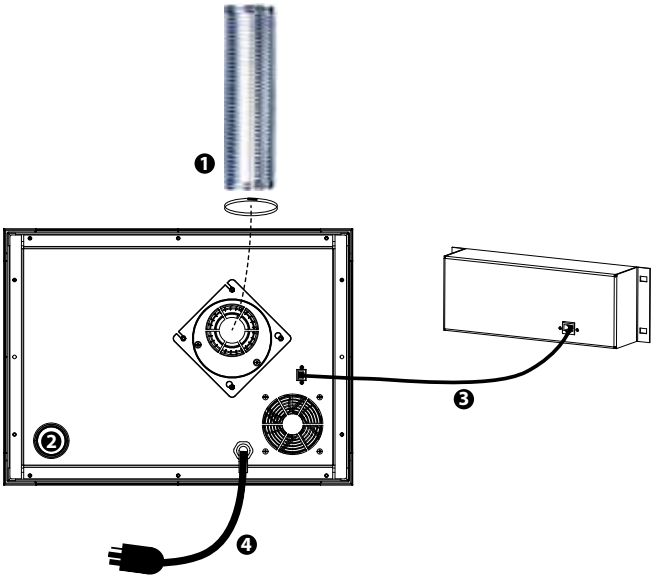

❶ Ensure the Air Intake Kit is installed properly.

❷ Ensure suitable grease-collecting means is in place.

❸ Connect the control unit to the generator.

❹ Connect the appliance to power socket.

4. To ensure the appliance works properly, follow instructions in Function Test on page 34

Function Test

NOTE: The internal cooling fan starts once the griddle plate temperature reaches 200°C [392°F].

- Read and understand all installation safety instructions regarding Personal Protection.
- Observe also ALL operation safety requirements in section *3 Operation*.

1. Turn the control knob to set the temperature to 200°C or 392°F.
2. The display shows the set temperature followed by a dot. Example: 200. or 392.
3. Within 2 seconds, the display changes from the set temperature (with dot) to the actual temperature (without dot) of the griddle plate. Example: 70
4. The griddle plate warms up to the set temperature.
5. As soon as the griddle plate temperature reaches the set temperature of 200°C or 392°F, turn the control knob to position **0** (OFF).
6. If the sensors detect high level of residual heat, the display shows hot.

   If the residual heat from the griddle plate is low, the appliance initiates the stand-by mode. When the system is in the stand-by mode, the dot on the display blinks once every second.

If the appliance does not function as expected, refer to section *5 Troubleshooting*.

Section 3
Operation

OPERATION SAFETY—DISCLAIMER

⚠ DANGER

The on-site supervisor is responsible for ensuring that operators are made aware of the inherent dangers of operating this equipment.

⚠ DANGER

Risk of fire/shock/equipment failure. **All minimum clearances must be maintained. Do not obstruct vents or openings.**

⚠ Warning

This equipment is intended for indoor use only. Do not install or operate this equipment in outdoor areas.

Notice

The reliability of the appliance can only be guaranteed when it is used properly. The appliance must always be operated within the limits and/or the operating conditions provided in this manual.

Notice

Avoid dropping any hard objects onto the equipment. Damages to the heating surface will shortened the life cycle of the equipment or incur high service costs.

Notice—Models with Glass-Top

Use Only Induction Suitable Cookware

Use only induction suitable cookware with proper sizes and made of proper material. The induction suitable cookware must be in good condition without any uneven, arched or partially detached bottoms.

Using unsuitable cookware can cause the appliance to fail prematurely, void your warranty, or incur high service costs.

Notice—Induction Griddles / Braising Pans

NEVER heat any cooking pan on the griddle plate or in the braising pan. Heating cooking pan with these equipment will damage these equipment. Heat only food products on the griddle plate or in the braising pan.

OPERATION SAFETY—PERSONAL PROTECTION

Notice

Induction appliances are more powerful, heat up pans quicker, and cook food faster than conventional cooking equipment. Your induction appliance will require different use and care than other conventional equipment.

Do not operate the equipment without reading this manual and understanding all safety requirements.

⚠ DANGER

If any part of the appliance is cracked or broken, **Stop and Immediately Turn Off the appliance**. Only if it is possible and safe, disconnect the equipment from main power supply. Do not touch any parts inside the appliance.

Disconnect electric power at the main power disconnect for all equipment being serviced.

Failure to disconnect the power at the main power supply disconnect could result in serious injury or death. The power switch DOES NOT disconnect all incoming power.

Contact an authorized service agency for assistance.

⚠ DANGER

Do not operate any appliance with a damaged or pinched cord or a damaged plug. All repairs must be performed by a qualified service company.

⚠ DANGER

Keep power cord AWAY from HEATED surfaces. DO NOT immerse power cord or plug in water. DO NOT let power cord hang over edge of table or counter.

⚠ DANGER

To avoid cardiac pacemaker malfunction, consult your physician or pacemaker manufacture about effects of electromagnetic field on your pacemaker.

⚠ DANGER

Never stand, site, or lean on the equipment! They are not designed to hold the weight of an adult, and may collapse or tip if misused in this manner.

⚠Warning

Short Cook Time

Induction appliances cook food faster than conventional cooking equipment. To avoid overheating and burning, check the cooking process frequently. Never leave the appliance unattended during operation.

⚠Caution

Metallic objects are heated up very quickly when placed on the cook zone during operation. To avoid injury,

DO NOT place any objects such as closed cans, aluminum objects (aluminum foils), cutlery, jewelry, or watches on the appliance.

DO NOT place any object such as paper, cardboard, or cloth on the cooking surface, because this creates a fire hazard.

DO NOT place credit cards, phone cards, tapes, or any objects that are sensitive to magnetism on the appliance.

DO NOT use the appliance for storage. DO NOT place any paper products, cooking utensils, cutlery, plastic vessels or food on the appliance.

Notice

Do not use the cooktop for food preparation such as cutting and chopping.

⚠Warning

Risk of burns from high temperatures. You may get burnt if you touch any of the parts during operation. Surfaces close to the cooking area including side panels may get hot enough to burn skin. Use extreme caution to avoid coming in contact with hot surfaces or hot grease. Wear personal protective equipment.

Cooking with Induction Glass-Tops Models

⚠Warning

Never Leave An Empty Pan On Cooktop

Induction appliances heat up empty pans very quickly. Never operate the appliance with an empty pan. Do not pre-heat pan. Always put food products, water or oil into the pan before turning on the appliance. Failure to do so will result in irreparable damage.

Notice

Broil-Dry Protection

Cook zones are monitored by temperature sensors. The sensors can detect overheating at the base of a cooking pan.

When an overheated pan (overheated oil, empty pan) is detected, the appliance stops transferring energy to the pan immediately. You must turn off the appliance and let it cool down before re-starting the appliance.

⚠Caution

Do Not Touch Overheated Appliance

To avoid burn injuries, do not touch the appliance when a pan is overheated and take all the necessary precautions when removing the overheated pan.

⚠Warning

Steam can cause serious burns. Always wear some type of protective covering on your hands and arms when removing lids or pans from the appliance. Lift the lid or pan in a way that will direct escaping steam away from your face and body.

Cooking with Induction Griddles/Braising Pans

⚠Caution

Induction Griddles / Braising Pans

A suitable grease-collecting means must be in place before operating appliance.

Important Rules—Operation and Maintenance

Follow these simple rules to ensure reliable and repeatable performance of your induction equipment:

1 Keep kitchen temperature below 40°C [105°F].

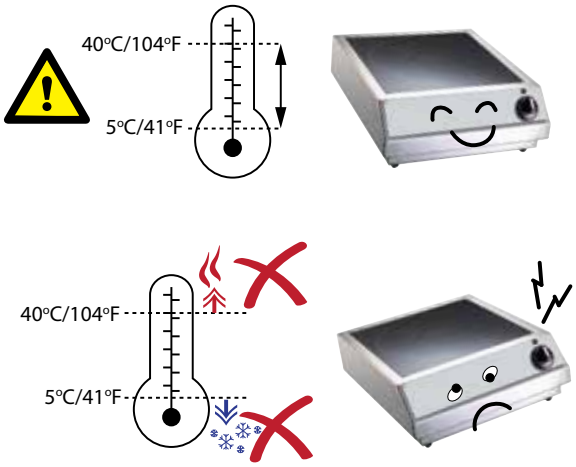

2 Never place your induction equipment next to any grease generating or heat generating equipment.

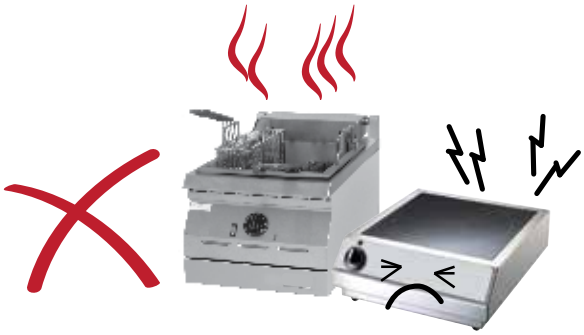

3 Clean the intake filter at least once a week or as often as required.

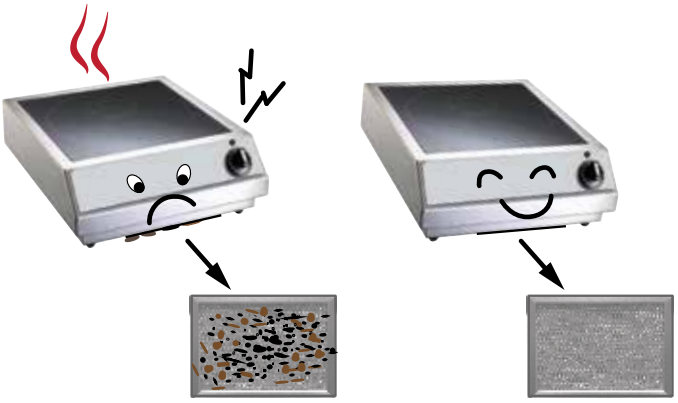

4 Use only pans that fits the glass. Do not use oversized pans.

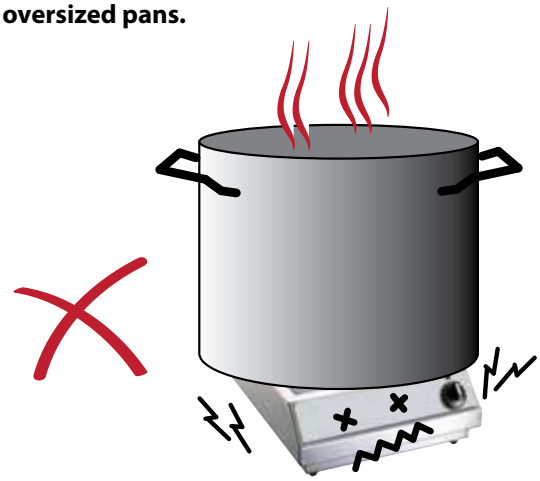

5 Never pre-heat the pan. Place the pan on the cook zone only when you are ready to cook.

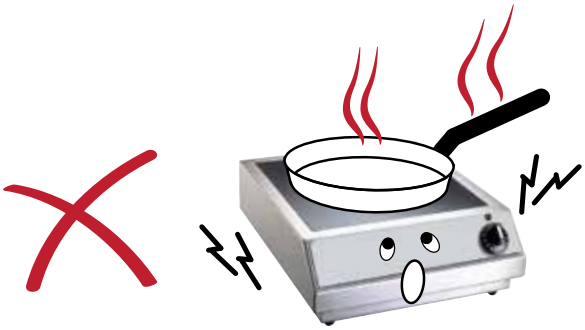

6 Do not use dented pans because it will cause damages to the electronics.

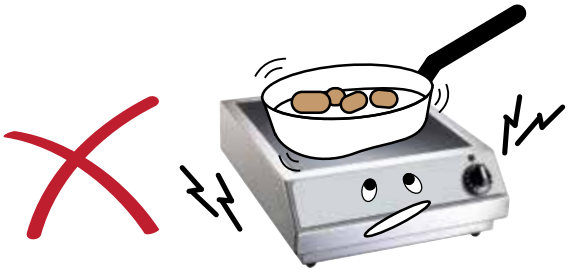

Temperature Control and Display

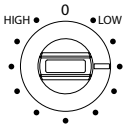

ON-Position
Any position where the White Line is not pointing at **0**.

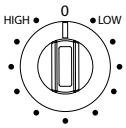

OFF-Position
The White Line is pointing at **0**.

Turn the control knob to set the temperature and the appliance is immediately ready for operation.

You can adjust the temperature from 20°C to 230°C [68°F to 450°F]. Typical cooking temperature is from 170°C to 200°C [338°F to 392°F].

The digital display shows the selected temperature initially and then followed by the actual, real-time temperature.

DIGITAL DISPLAY

Temperature followed by a dot

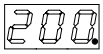

The digital display shows the temperature setting while you turn the knob. When you stop, the selected temperature is shown with a dot. Within 2 seconds, the display shows the actual or real-time temperature

Temperature shown without a dot

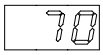

The display shows the actual or real-time temperature without a dot.

To shutdown the appliance,

Turn the control knob to the OFF-position. If the sensors detect high level of residual heat, the display shows **hot**: 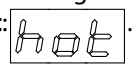

.

If the residual heat from the griddle plate is low, the appliance initiates the stand-by mode. When the system is in the stand-by mode, the dot on the display blinks once every second. 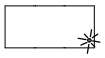

Grease Drawer

- Empty out the grease drawer as often as necessary.
- Before operating the appliance, ensure the grease drawer is placed correctly and securely under the grease chute such that the drawer will not slide out or fall.

⚠ Caution

Risk of burn from hot equipment, hot grease and steam. Wear personal protective equipment.

Considerations

- **Always season the griddle plate before putting any protein on.**
- **Cooking Food from Frozen**

  If you cook food from frozen regularly, do not put the frozen food on the same positions on the griddle plate every time. Otherwise, the plate could deform locally overtime.
- **Using Proper Cooking Utensils**

  Use only the spatula provided to turn over food products on the griddle plate. Using any sharp-edged objects such as knife or fork can damage the griddle surface.
- **Recovering from Temperature Loss**

  Temperature loss occurs when cold food is put on the griddle plate. The RTCSmp technology can immediately sense the temperature drop and correct any temperature loss.

When Appliance Is Idle

Best Practice:

When the induction appliance is not in use, always put the control knob in the 0 (OFF) position.

Short Cook Time

To heat up from 20°C to 200°C (68°F to 392°F), a single cook-zone griddle will take:

- SH/GR 3500, approximately 4 ½ minutes
- SH/GR 5000, approximately 3 minutes

Section 4
Maintenance

MAINTENANCE SAFETY—DISCLAIMER

⚠ DANGER

It is the responsibility of the equipment owner to perform a Personal Protective Equipment Hazard Assessment to ensure adequate protection during maintenance procedures.

⚠ Warning

A good maintenance of the appliance requires regular cleaning, care and servicing. The site-supervisor and the operator must ensure all components relevant to safety are in perfect working order at all times.

NOTE: Cleaning tools and supplies are not provided.

DANGEROUS ELECTRICAL VOLTAGE

⚠ DANGER

Do not open the appliance. Maintenance and servicing work other than cleaning as described in this manual must be done by an authorized service personnel.

⚠ DANGER

If any part of the appliance is cracked or broken, **Stop and Immediately Turn Off the appliance**. Only if it is possible and safe, disconnect the equipment from main power supply. Do not touch any parts inside the appliance.

Disconnect electric power at the main power disconnect for all equipment being serviced.

Failure to disconnect the power at the main power supply disconnect could result in serious injury or death. The power switch DOES NOT disconnect all incoming power.

Contact an authorized service agency for assistance.

MAINTENANCE SAFETY—CLEANING

⚠ Warning

Never use a high-pressure water jet for cleaning or hose down or flood interior or exterior of the equipment with water. Ensure that no liquid can enter into the equipment.

⚠ Warning

Allow heated equipment / glass surface to cool down before attempting to clean, service or move.

⚠ Warning

When cleaning the exterior, care should be taken to avoid front power switch and the electrical cords. Keep water and cleaning solutions away from these parts.

⚠ Caution

Do not use caustic cleaners on any part of the equipment. Use mild, non abrasive soaps or detergents, applied with a sponge or soft cloth.

⚠ Caution

Ensure to remove all residues of cleaning agents from the cooking surfaces. Use a clean moist cloth to wipe off any such surfaces.

⚠ Caution

Using commercial cleaning fluids or chemicals: Read the directions for use and precautionary statements before use. Pay attention to the concentration of cleaner and the length of time the cleaner remains on the food-contact surfaces or equipment surfaces.

Notice

Inspect and Clean Fresh Air Intake Filter

We strongly recommend using air intake filters in all installations to protect the equipment from grease particles. A dirty, blocked air intake filter blocks the air vent and can cause damages to the electronic components. Inspect, clean or replace the air intake filters at least once a week or as often as necessary.

⚠ Warning

Inspect Silicone Seal

When the silicone seal is broken, water penetration could cause the appliance to fail, and any malfunction could cause personal harm.

PERSONAL PROTECTION

⚠ DANGER

All utilities (gas, electric, water and steam) must be OFF to all equipment and locked out of operation according to national/regional, as well as company approved practices during installation, maintenance and servicing. Always allow appliance to cool.

⚠ DANGER

Use appropriate safety equipment during installation, maintenance and servicing.

⚠ DANGER

Never stand, sit, or lean on the equipment! They are not designed to hold the weight of an adult, and may collapse or tip if misused in this manner.

⚠ DANGER

To avoid cardiac pacemaker malfunction, consult your physician or pacemaker manufacture about effects of electromagnetic field on your pacemaker.

⚠ Warning

Markings and warning labels mounted directly on the equipment must be observed at all times and kept in a fully legible condition.

⚠ Warning

Risk of burns from high temperatures. You may get burnt if you touch any of the parts during operation. Surfaces close to the cooking area including side panels may get hot enough to burn skin. Use extreme caution to avoid coming in contact with hot surfaces or hot grease. Wear personal protective equipment.

⚠ Caution

Use caution when handling metal surface edges of all equipment.

Daily Cleaning and Maintenance

STAINLESS STEEL CASE

1. For any appliance with stainless steel case or stainless steel flange, clean the stainless steel surface using a soft cloth with a mild detergent and/or a food-safe liquid cleaner designed to clean stainless steel.
2. Wipe dry with a soft clean cloth.

VISUAL INSPECTION OF SILICONE SEAL

Inspect the silicone seal around the glass perimeter or the joint between the appliance and the counter surface. Call for service immediately if you notice:

- Cracks on the silicone seal.
- The silicone seal comes away from the glass/housing or moves when you press down on the seal.

GREASE DRAWER

- Empty out the grease drawer as often as necessary.

⚠ Caution

Risk of burn from hot equipment, hot grease and steam. Wear personal protective equipment.

⚠ Caution

A grease drawer must be in place before operating appliance.

DRAIN PLUG (BRAISING PAN EQUIPMENT)

- The drain plug is dishwasher-safe.

CLEANING THE GRIDDLE PLATE / BRAISING PAN

⚠ Caution

Risk of burn from hot equipment, hot grease and steam. Wear personal protective equipment.

Notice

DO NOT USE strong detergents and solvents such as Ketone, Ester, and alkaline detergents. Depending on the concentration, reaction time and temperature, these chemicals could damage the special coating on the griddle plate.

DO NOT USE steel wool, tough scratching sponges, or knives on the grill plate. Use the cleaning pad provided with the equipment.

DO NOT USE ice cubes because that can cause deformation of the griddle plate.

To clean the griddle plate / braising pan:

1. Set temperature to 60°C or 140°F.
2. Pour some water onto the plate / pan and let the hot water dissolve the soiling.
3. Use non-abrasive scrubbing pads to scrape the residues into the grease drawer. To avoid burn injuries, scrub and scrape with a spatula on a non-abrasive scrubbing pad.

Weekly Cleaning and Maintenance

AIR INTAKE FILTER, COUNTER-TOP / MODULE-LINE MODELS

(SH/GR, SH/DU/GR, MO/DU/GR, MO/DU/KB)

1. The air intake filter is located on the bottom of the appliance. To remove, slid out the filter from the holder.

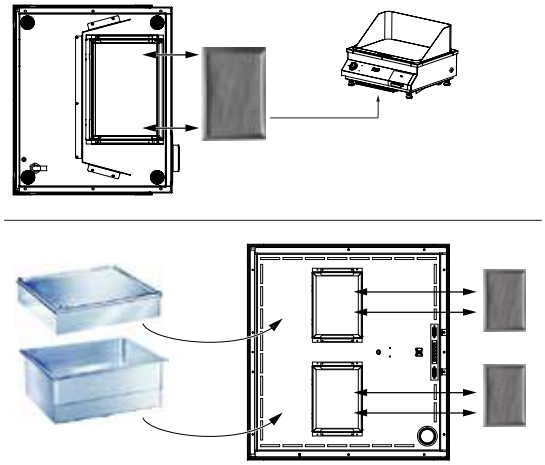

2. The filter is dishwasher-safe.

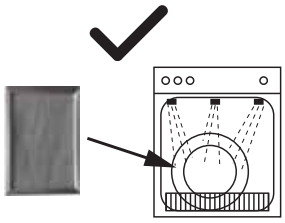

3. The filter must be DRY before you put it back into the holder.

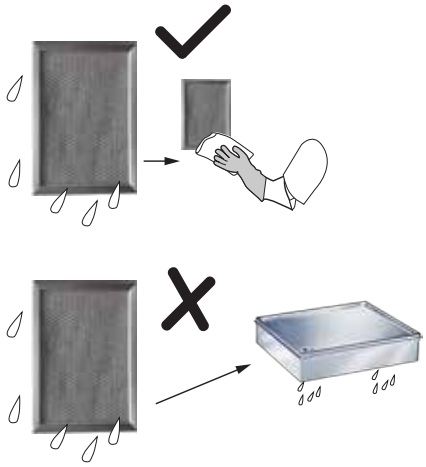

AIR INTAKE FILTER, BUILT-IN MODELS

(SH/GR/IN)

1. Locate the filter, which is inserted into the holder mounted onto the cabinet.
2. Press down on the corners as shown to pop out the filter. If the filter doesn't move, try the opposite corners. The filter is pressure fitted into the holder.

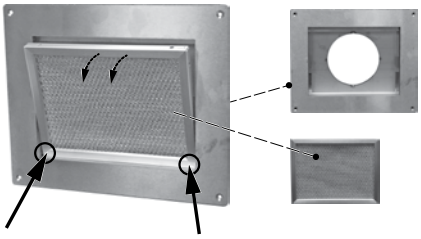

3. The filter is dishwasher-safe.

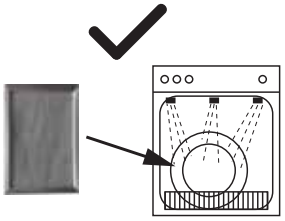

4. The filter must be DRY before you put it back into the holder.

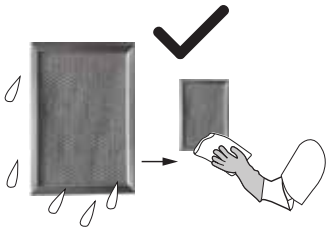

Yearly Maintenance

Best Practice: Have the induction appliance examined once a year by an authorized technician.

Section 5
Troubleshooting

DANGEROUS ELECTRICAL VOLTAGE

⚠ DANGER

If any part of the appliance is cracked or broken, **Stop and Immediately Turn Off the appliance**. Only if it is possible and safe, disconnect the equipment from main power supply. Do not touch any parts inside the appliance.

Disconnect electric power at the main power disconnect for all equipment being serviced.

Failure to disconnect the power at the main power supply disconnect could result in serious injury or death. The power switch DOES NOT disconnect all incoming power.

Contact an authorized service agency for assistance.

⚠ DANGER

Do not open the appliance. Maintenance and servicing work other than cleaning as described in this manual must be done by an authorized service personnel.

⚠ Warning

Markings and warning labels mounted directly on the equipment must be observed at all times and kept in a fully legible condition.

NOTE: If a problem arises during operation of your induction appliance, follow the Troubleshooting Charts before calling service. Routine adjustments and maintenance procedures are not covered by the warranty.

Common Problems

One or more of the following conditions may affect the function or cause the induction equipment to fail:

- Using unsuitable cookware such as non-induction pans, oversized pans, or damaged pans.
- High ambient temperature.
- Inadequate ventilation causing hot air to re-enter through the air intake slots.
- Dirty air intake filter.
- Empty pan is left on the hob when the appliance is ON.

Symptoms

- When a malfunction occurs, the appliance may be in one of the following states:
    - The appliance switches off immediately.
    - The appliance continues to operate in a power reduction mode.
    - The appliance continues to operate normally.
- Appliance equipped with an indicator lamp or a digital display, see section *Troubleshooting Chart — Error Code / Flash Code*.
- Appliance without an indicator lamp / digital display, or the lamp is malfunction, see section *Troubleshooting Without Error Code / Flash Code*.
- NOTE:

  The cooling fan starts when the ambient temperature in the control area exceeds 55ºC [130ºF].

  At heat sink temperature higher than 70ºC [160ºF], the controller automatically reduces power to keep the appliance in normal operating conditions. The cooker runs in a non-continuous mode. This mode can be heard.

Boil Test

To test the efficiency of a pan for induction cooking, perform a boil test.

This test is not applicable to griddles and braising pans. NEVER heat any cooking pan on a griddle plate or in a braising pan.

(Test for 3.5kW or 5.0kW Induction Coil)

Perform a boil test to verify the performance of a pan for induction cooking.

- Add one liter of cold water into the pan (optimal when use pan with bottom diameter of 24cm) and bring it to boil. Compare the total boil time to the guideline below:
    - 3.5kW Coil, approx. 140 seconds
    - 5.0kW Coil, approx. 85 seconds

If time to boil exceeds the above guideline, then the pan is not suitable for achieving optimal efficiency. Please contact your supplier to purchase suitable induction pans.

If the induction appliance does not function as expected despite using quality induction pans, refer to the troubleshooting charts.

Troubleshooting Without Error Code / Flash Code

Symptom	Possible Cause	Action
Pan does not heat up on glass-top. No heat to griddle or braising pan. Indicator lamp is OFF (dark). Digital display is OFF (dark).	No power supply.	Check incoming power supply (Example, power cable plugged into the wall socket). Check kitchen main fuse box.
	Control knob is in OFF-position.	Turn control knob to an ON-position.
	Defective equipment	Put knob in OFF-position. Only if possible and safe, disconnect the appliance from the power supply. Contact an authorized service agency.
Pan does not heat up and indicator lamp blinks continuously. If Indicator lamp blinks at intervals, see next section. (Not applicable to griddles or braising pans.)	Pan is too small.	Use a suitable pan with bottom diameter larger than 12cm[5″].
	Pan is not placed in the center of the hob; pan is not detected by sensor.	Move the pan to the center of the hob.
	Unsuitable pan.	Select only induction-ready cookware.
	Defective equipment	Put knob in OFF-position. Only if possible and safe, disconnect the appliance from the power supply. Contact an authorized service agency.
Poor heating, indicator lamp / digital display is ON	Air-cooling system is obstructed.	Verify that air vents are not obstructed. Ensure the fresh air filter is clean.
	Unsuitable pan. (Not applicable to griddles or braising pans.)	Select various induction-ready cookware for induction cooking. Then compare the results.
	Ambient temperature is too high. The cooling system is not able to keep the appliance in normal operating conditions.	Verify that no hot air is taken in by the fan. Reduce the ambient temperature. The intake air temperature must be lower than 40°C [104°F].
	One phase is missing (for equipment with three phase supply only).	Check incoming power supply (Example, power cable plugged into the wall socket). Check kitchen main fuse box.
	Defective equipment	Put knob in OFF-position. Only if possible and safe, disconnect the appliance from the power supply. Contact an authorized service agency.
Appliance does not react to control knob positions	Defective control switch.	Put knob in OFF-position. Only if possible and safe, disconnect the appliance from the power supply. Contact an authorized service agency.
Power/heating level seems to be reduced, fan is working	Air-cooling system is obstructed. Internal fan is dirty.	Verify that air vents are not obstructed. Ensure the fresh air filter is clean. Contact an authorized service agency.
Power/heating level seems to be reduced, fan does not work	Defective fan or fan control.	Put knob in OFF-position. Only if possible and safe, disconnect the appliance from the power supply. Contact an authorized service agency.
After a long period of continuous operation, the power/heating level seems to be reduced	Overheated induction coil; cooking area is too hot. Overheated pan. Pan is empty.	Switch the appliance off. Safely remove pan, if any. Wait until the appliance has cooled down before turning it ON again.
Small metallic objects (e.g. spoon) are heated up in the cook zone.	Pan detection function is defective.	Put knob in OFF-position. Only if possible and safe, disconnect the appliance from the power supply. Contact an authorized service agency.

Troubleshooting — Error Code / Flash Code

- **Appliance equipped with an indicator lamp:**

  The indicator lamp flashes to signal a specific problem. To find the possible cause, count the number of short flashes after each long flash.

  Example: "— …. — …." The lamp gives a long flash for 0.6 seconds. Then it gives 4 short flashes (indicated by the dots in the example). The sequence repeats until the error is canceled.

- **Appliance equipped with a digital display:**

  The display may show an error code, example: E04.

Number of Flashes (Indicator Lamp)	Error Code (Display)	Problem	Action
.....		Normal Operation.	Normal Operation.
1 "— . — . — ."	E01	Unsuitable induction cooking pan. Internal wiring/coil connection malfunction. (1)	Check pan material. Contact an authorized service agency.
2 "— .. — .. — .."	E02	Unsuitable induction cooking pan. Coil/ software overcurrent. (1)	Check pan material. Contact an authorized service agency.
3 "— ... — ... — ..."	E03	Air-cooling system obstructed. Fan mal-function. Internal heat sink overheated. (1)	Let appliance cool down. Verify that air vents are not obstructed. Check and clean air filter. Contact an authorized service agency.
4 "— .... — .... — ...."	E04 E17 E18 E27 E28 E41 E42 E43 E44 E45 E46	Overheated cook zone. Overheated pan detected. Sensor failure. Overheated or defective sensor. (1) NOTE: Errors E41 to E46, griddles and braising pans may continue to operate.	Let appliance and/or pan cool down. Check pan material. Verify that air vents are not obstructed. Check and clean air filter. Contact an authorized service agency.
5 "— ..... — ..... — ....."	E05	Power switch/potentiometer error. (1)	Contact your authorized service agency.
6 "— ..... — ..... — ....."	E06 E30	Ambient temperature too high (the cooling system is not able to keep the induction appliance in normal operating conditions). Internal component overheated. (1)	Let appliance cool down. Verify that air vents are not obstructed. Check and clean air filter. Verified that no hot air is taken in by the fan. Reduce the ambient temperature. The intake air temperature must be lower than 40°C [104°F]. Contact an authorized service agency.
7 "— ..... — ..... — ....."	E29 E47	Generator component failure. Problem with control wiring. Warning from overheated pan / cooking empty sensor or coil connection failed. (1) NOTE: E47 on griddles/braising pans indicates that griddle plate is too hot.	Let equipment/ pan cool down. Check food in the pan or empty pan. Contact an authorized service agency.
8 "— ..... — ..... — ....."	E21 E24 E25 E26	Sensor error from heat sink or CPU. Board overheated. Ambient temperature beyond normal operating range. (1)	Verify that air vents are not obstructed. Check air filter. Reduce ambient temperature. Contact an authorized service agency.
10 "— ..... — ..... — ....."	E10	Internal electronic failure. (1) or (2)	Contact an authorized service agency.
No flash code	E11	Multi-Line model only: 24V Voltage too low. (1).	Contact your authorized service agency to check power connection, 24V, power board and display.
No flash code	E12 E13	Power reduction. Warning of high heat sink temperature. Cook zone temperature too high. Sensor warning of high temperature. (2)	Let equipment/ pan cool down. Check pan material. Verify that air vents are not obstructed. Check and clean air filter. Verified that no hot air is taken in by the fan. Reduce ambient temperature. The intake air temperature must be lower than 40°C [104°F]. Contact an authorized service agency.
No flash code	E19 E20	Warning of high internal temperature. (2)	
No flash code	E22	Griddle only. RTCS/CU sensor defect. (1)	Contact an authorized service agency.

(1) The appliance switches off immediately.

(2) The appliance continues to operate in a power reduction mode.

(3) The appliance continues to operate normally.

Wearable Parts List

Photo	Part Number	Description
	70000015	Silicone Seal PACTAN 7076, 310ml. For installation and water-tight seal.

GARLAND
1177 KAMATO ROAD, MISSISSAUGA, ONTARIO, CANADA. L4W1X4

888-442-7526
WWW.GARLAND-GROUP.COM

Every new piece of Manitowoc Foodservice equipment comes with KitchenCare™ and you choose the level of service that meets your operational needs from one restaurant to multiple locations.

StarCare – Warranty & lifetime service, certified OEM parts, global parts inventory, performance audited
ExtraCare – CareCode, 24/7 Support, online/mobile product information
LifeCare – Install & equipment orientation, planned maintenance, KitchenConnect™, MenuConnect
Talk with KitchenCare™ • 1-844-724-CARE • www.mtwkitchencare.com

To learn how Manitowoc Foodservice and its leading brands can equip you, visit our global web site at www.manitowocfoodservice.com, then discover the regional or local resources available to you.

©2014 Manitowoc Foodservice except where explicitly stated otherwise. All rights reserved.

Part Number 4532291 Rev 3 12/15